This is a digital copy of a book that was preserved for generations on library shelves before it was carefully scanned by Google as part of a project to make the world's books discoverable online.

It has survived long enough for the copyright to expire and the book to enter the public domain. A public domain book is one that was never subject to copyright or whose legal copyright term has expired. Whether a book is in the public domain may vary country to country. Public domain books are our gateways to the past, representing a wealth of history, culture and knowledge that's often difficult to discover.

Marks, notations and other marginalia present in the original volume will appear in this file - a reminder of this book's long journey from the publisher to a library and finally to you.

Usage guidelines

Google is proud to partner with libraries to digitize public domain materials and make them widely accessible. Public domain books belong to the public and we are merely their custodians. Nevertheless, this work is expensive, so in order to keep providing this resource, we have taken steps to prevent abuse by commercial parties, including placing technical restrictions on automated querying.

We also ask that you:

+ *Make non-commercial use of the files* We designed Google Book Search for use by individuals, and we request that you use these files for personal, non-commercial purposes.

+ *Refrain from automated querying* Do not send automated queries of any sort to Google's system: If you are conducting research on machine translation, optical character recognition or other areas where access to a large amount of text is helpful, please contact us. We encourage the use of public domain materials for these purposes and may be able to help.

+ *Maintain attribution* The Google "watermark" you see on each file is essential for informing people about this project and helping them find additional materials through Google Book Search. Please do not remove it.

+ *Keep it legal* Whatever your use, remember that you are responsible for ensuring that what you are doing is legal. Do not assume that just because we believe a book is in the public domain for users in the United States, that the work is also in the public domain for users in other countries. Whether a book is still in copyright varies from country to country, and we can't offer guidance on whether any specific use of any specific book is allowed. Please do not assume that a book's appearance in Google Book Search means it can be used in any manner anywhere in the world. Copyright infringement liability can be quite severe.

About Google Book Search

Google's mission is to organize the world's information and to make it universally accessible and useful. Google Book Search helps readers discover the world's books while helping authors and publishers reach new audiences. You can search through the full text of this book on the web at `http://books.google.com/`

Stanford University Libraries
3 6105 127 786 098

35TH CONGRESS, 1st Session. } HOUSE OF REPRESENTATIVES. { Ex. Doc. No. 32.

REPORT

OF THE

COMMISSIONER OF PATENTS

FOR THE YEAR 1857.

ARTS AND MANUFACTURES.

IN THREE VOLUMES.

VOLUME III.

WASHINGTON:
JAMES B. STEEDMAN, PRINTER.
1858.

LIBRARY
Leland Stanford, Jr.
UNIVERSITY

IN THE HOUSE OF REPRESENTATIVES,

April 28, 1858.

Resolved, That there be printed, for the use of the Members of the present House of Representatives, twenty thousand copies of the Mechanical portion of the Patent Office Report for the year 1857.

Attest:

J. C. ALLEN,
Clerk.

81928

CONTENTS.

ILLUSTRATIONS

TO PATENTS FOR INVENTIONS GRANTED DURING THE YEAR 1857.

	Page.
II.—Metallurgy and manufacture of metals	1
III.—Manufacture of fibrous and textile substances	109
IV.—Chemical processes, manufactures, and compounds	192
V.—Calorics, comprising lamps, stoves, &c	211
VI.—Steam and gas engines	250
VII.—Navigation and maritime implements	304
VIII.—Mathematical, philosophical, and optical instruments	336
IX.—Civil engineering and architecture	358
X.—Land conveyance	421
XI.—Hydraulics and pneumatics	467
XII.—Lever, screw, and other mechanical power	513
XIII.—Grinding-mills and mill-gearing	536
XIV.—Lumber, including machines and tools for preparing and manufacturing	572
XV.—Stone and clay manufactures	693
XVI.—Leather, including tanning, dressing, and manufacture	715
XVII.—Household furniture, machines and implements for domestic purposes	742
XVIII.—Arts polite, fine, and ornamental	796
XIX.—Fire-arms and implements of war	861
XX.—Surgical and medical instruments	880
XXI.—Wearing apparel, including implements for manufacturing	889
XXII.—Miscellaneous	894
XXIII.—Additional improvements	915

ILLUSTRATIONS.

(CONTINUED.)

18485

fig.1

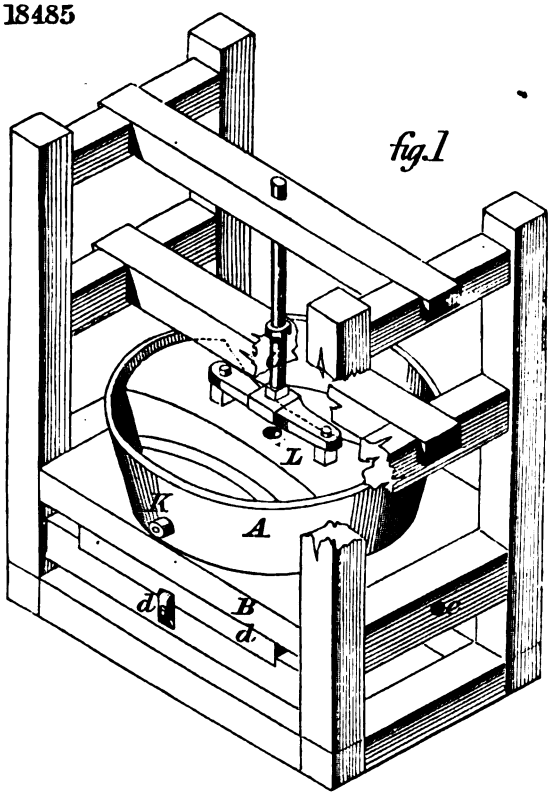

fig.2

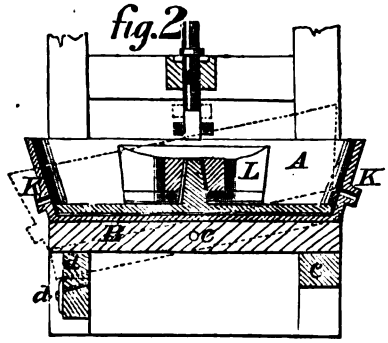

18206

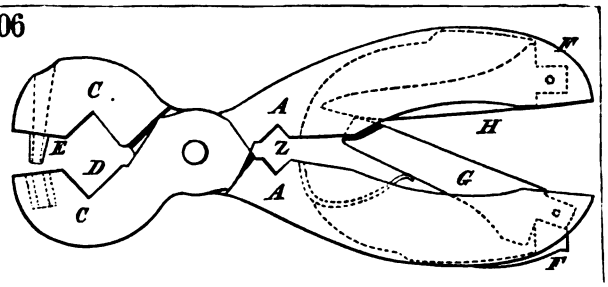

17078

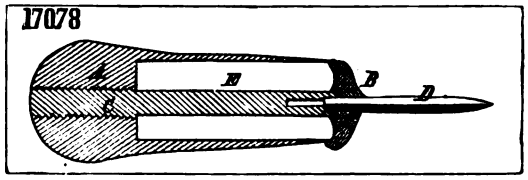

17556

fig.1

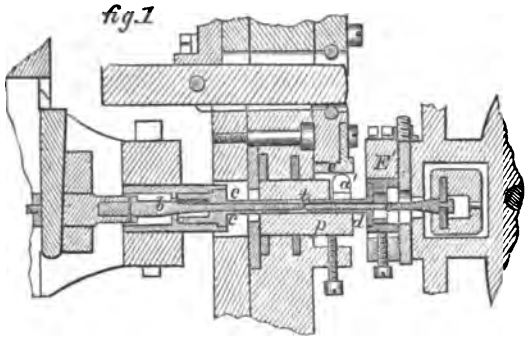

fig.2

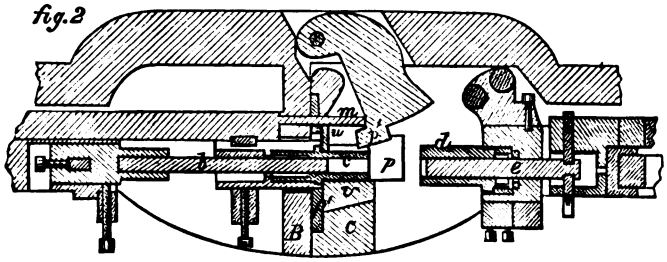

fig.4

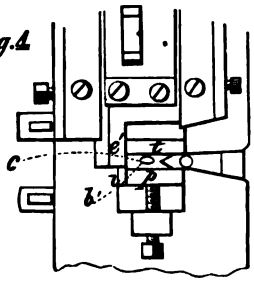

fig.3

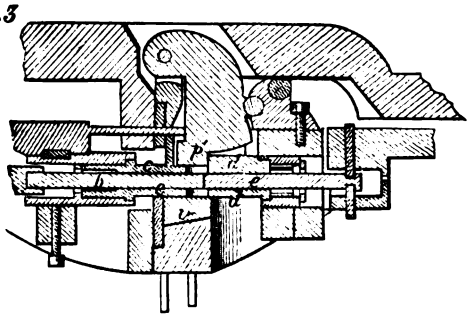

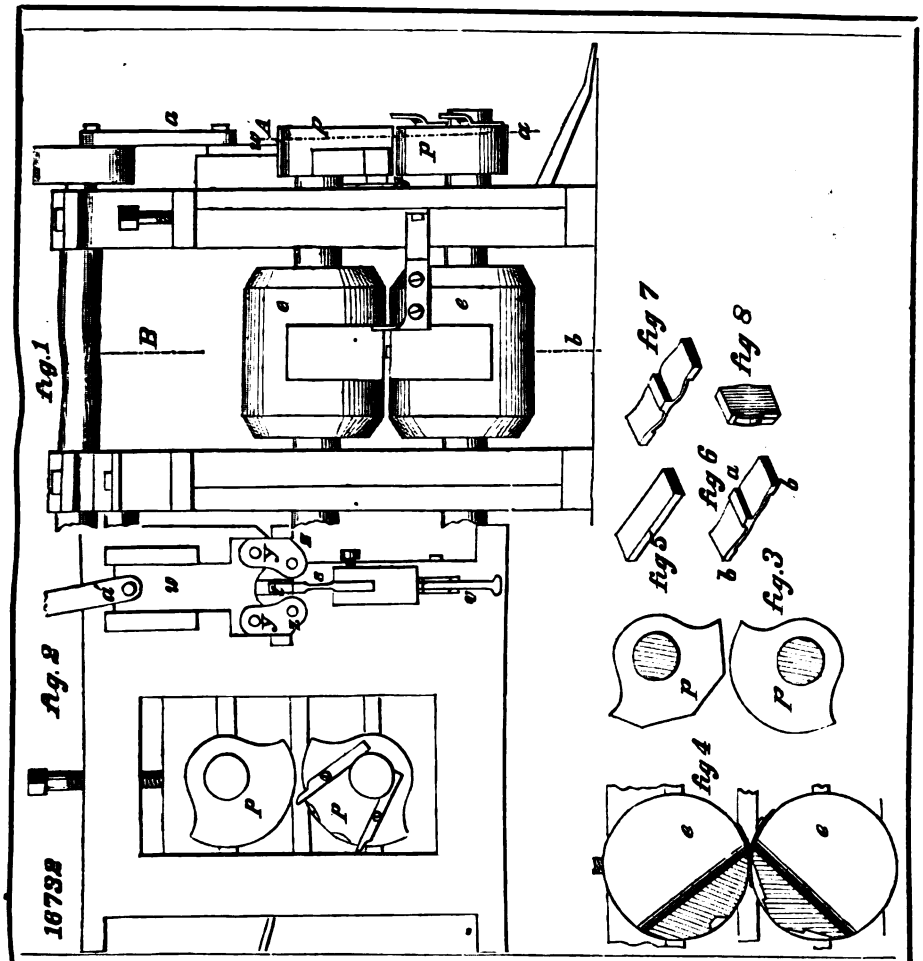
fig.1
fig.2
fig.3
fig.4
fig.5
fig.6
fig.7
fig.8
16782

17639

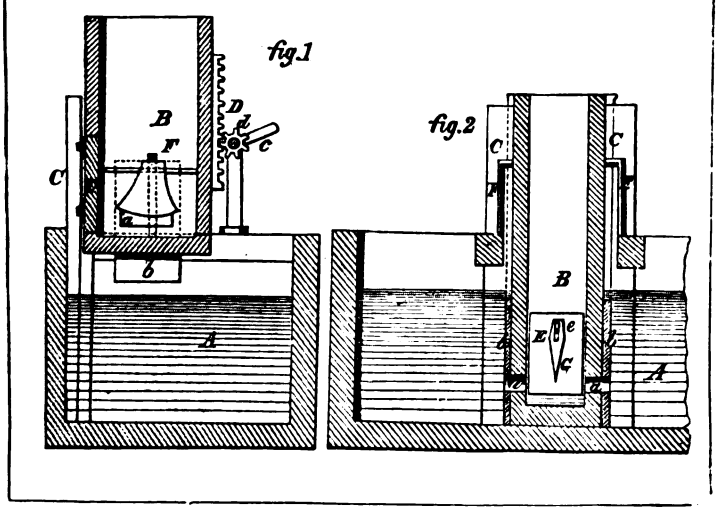
fig.1
fig.2
A
B
C
D
F

18452

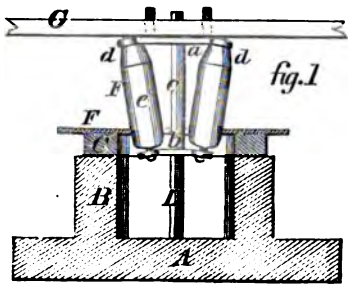

fig.1

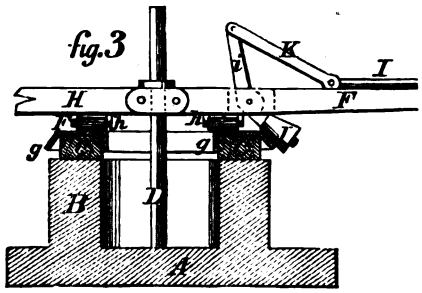

fig.3

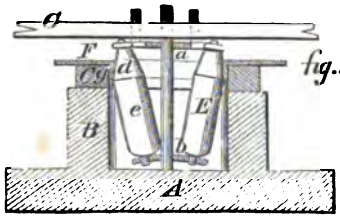

fig.2

fig.4

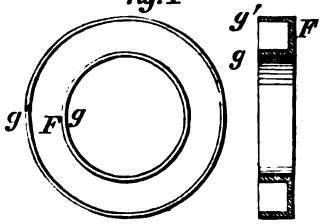

fig 5

18157

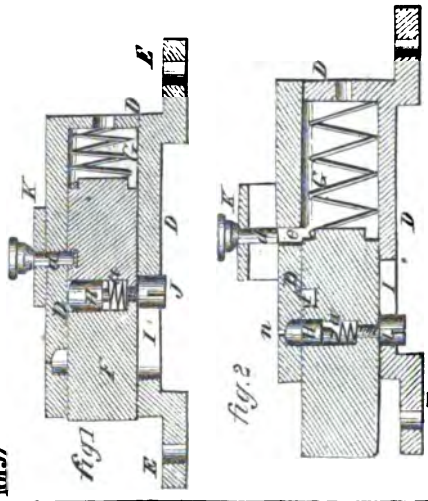

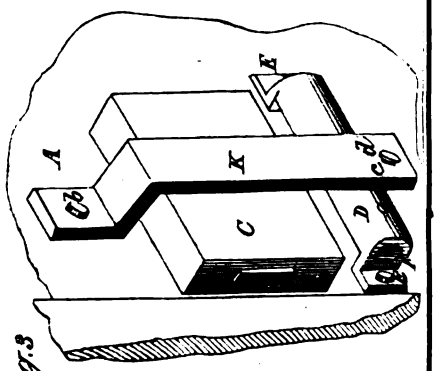

17243

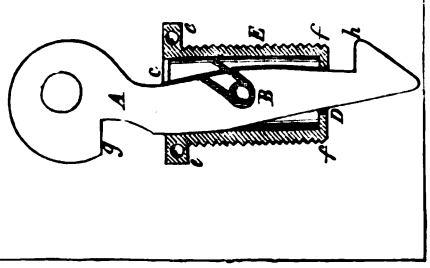

16440 fig.1

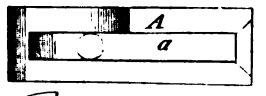

fig.2

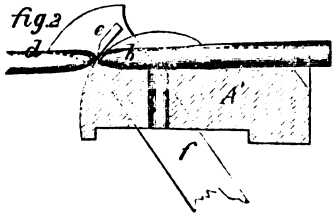

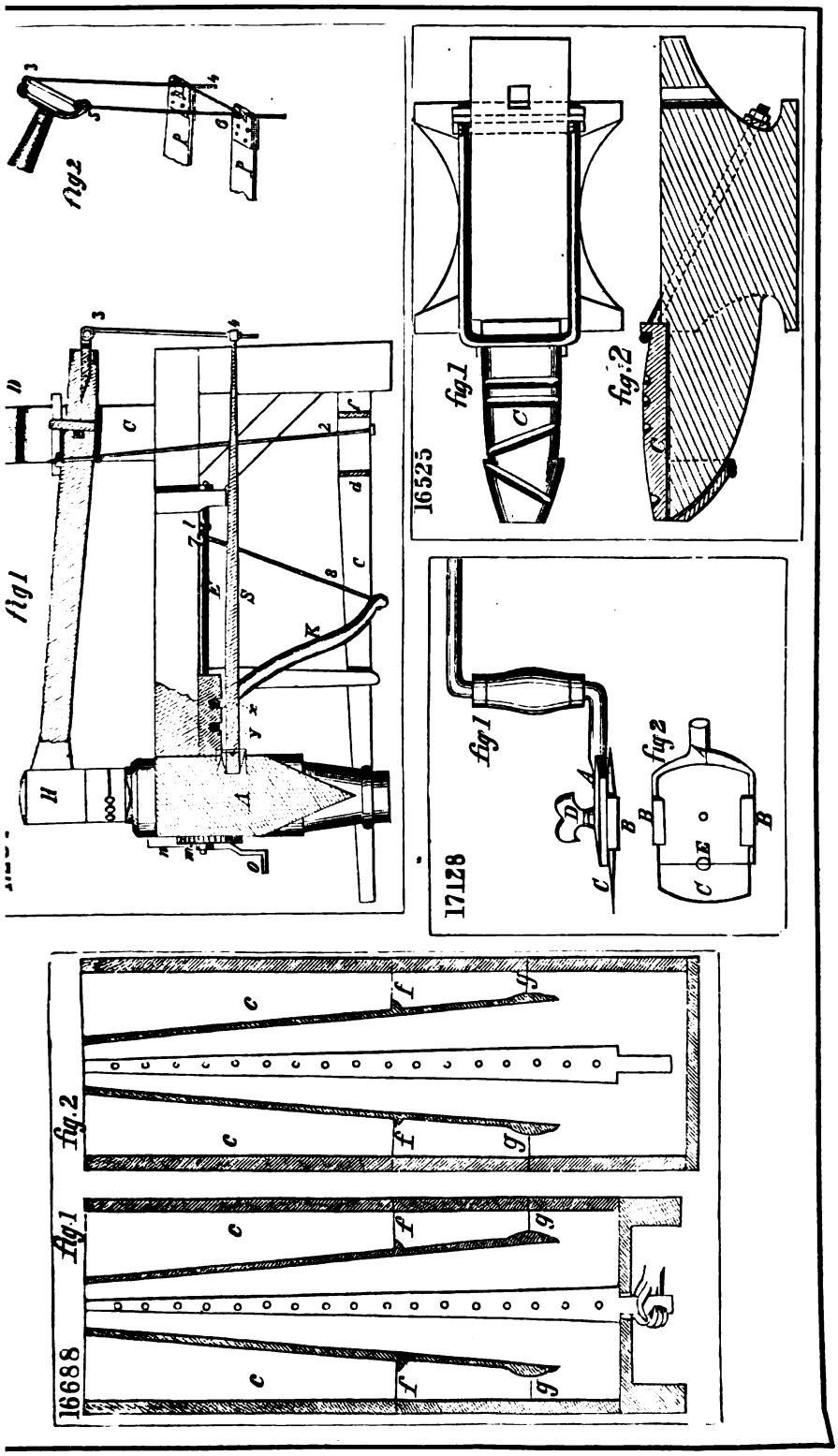
fig 1
fig 2
16525
fig 1
fig 2
17128
fig 1
fig 2
16688
fig 1
fig 2

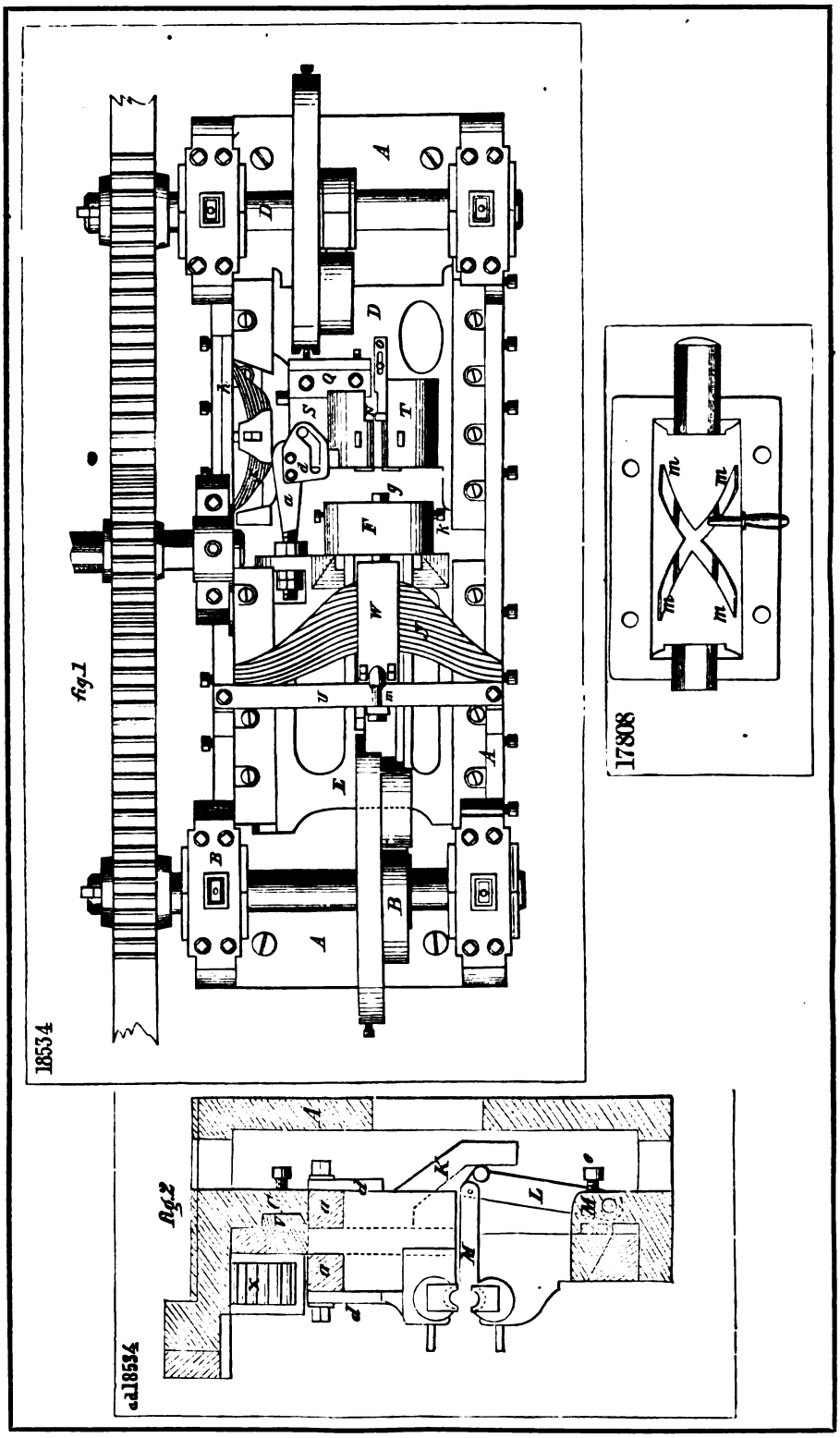
fig.1
18534
17808
fig.2
a18534

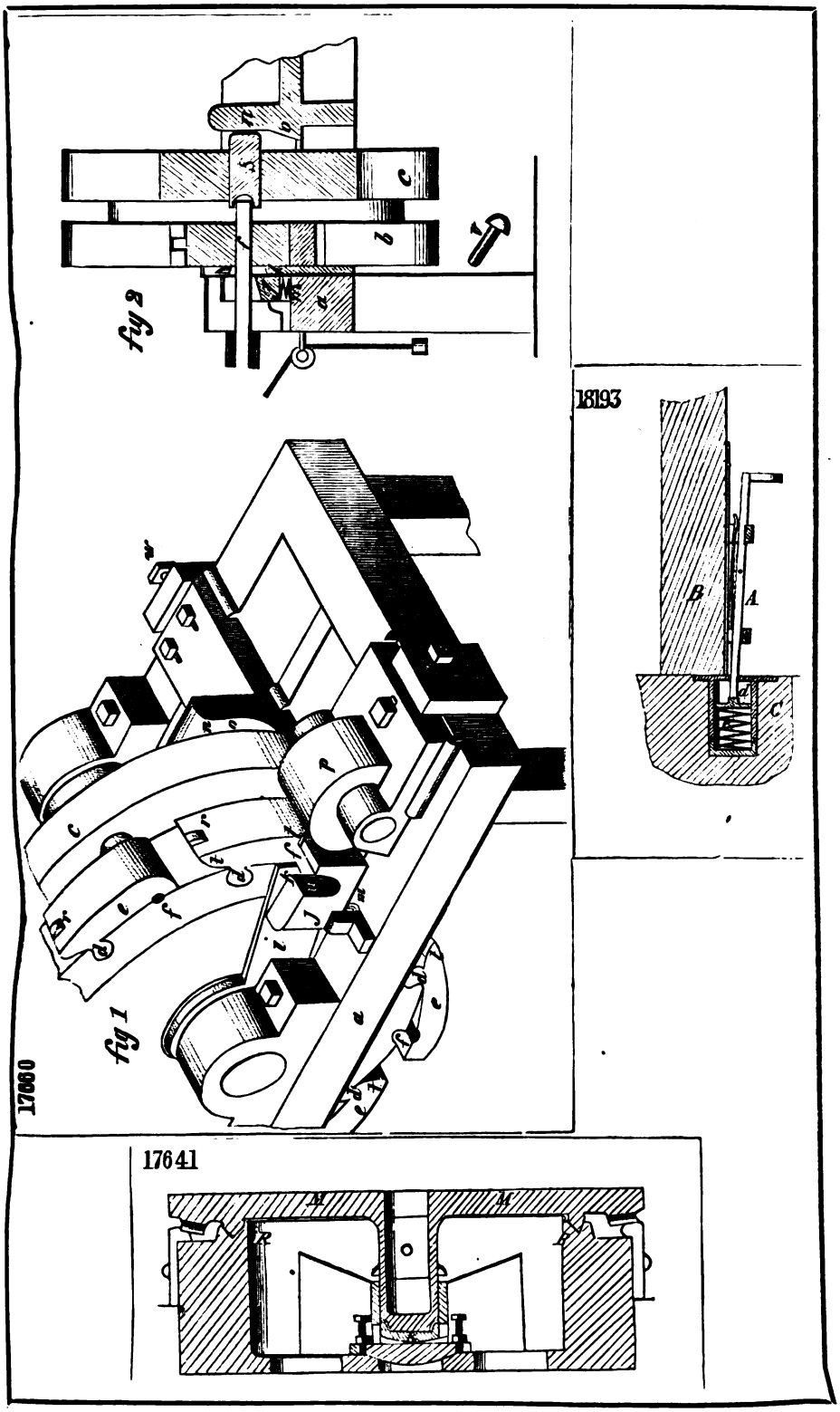
fig 2
fig 1
17660
18193
17641

18058

fig. 1

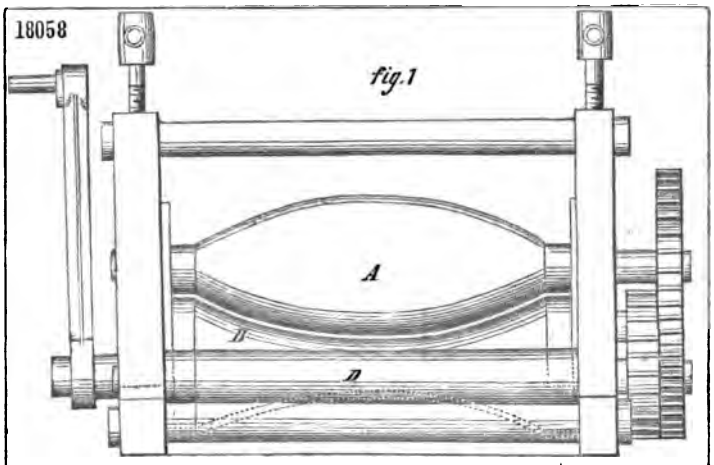

fig. 2

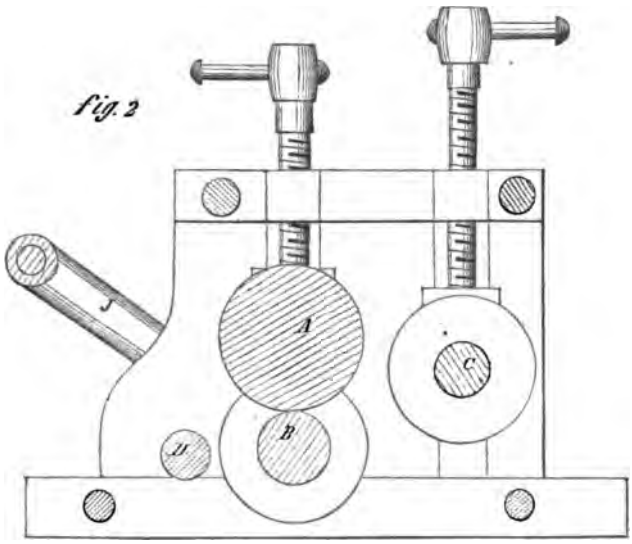

ad18775

fig. 2

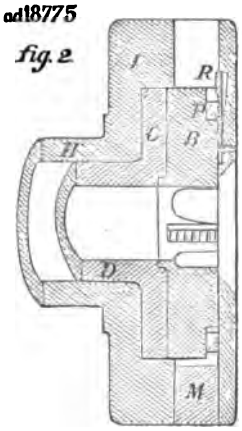

0

fig. 3

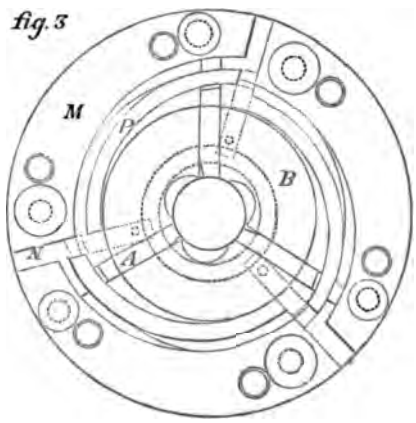

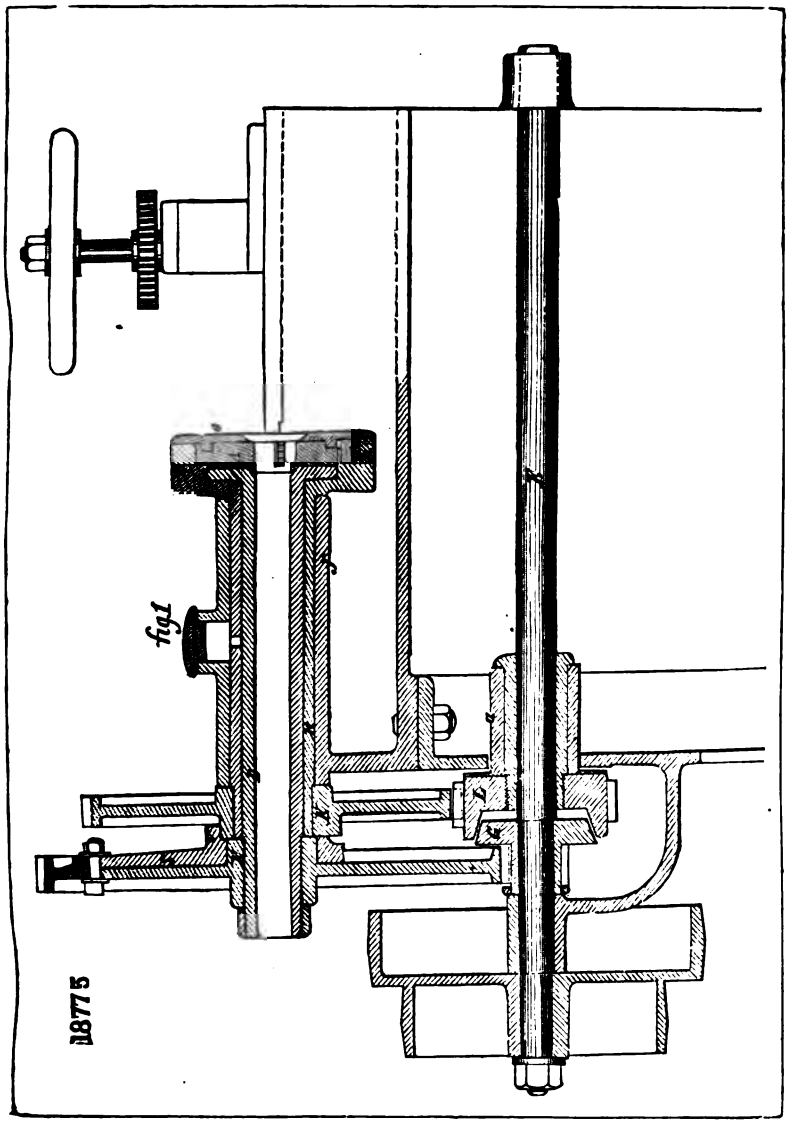

18111 *fig. 1*

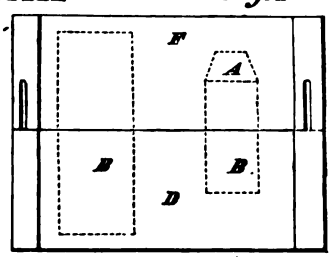

fig. 2

16372

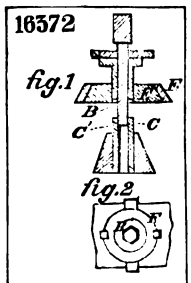

16564

fig.1

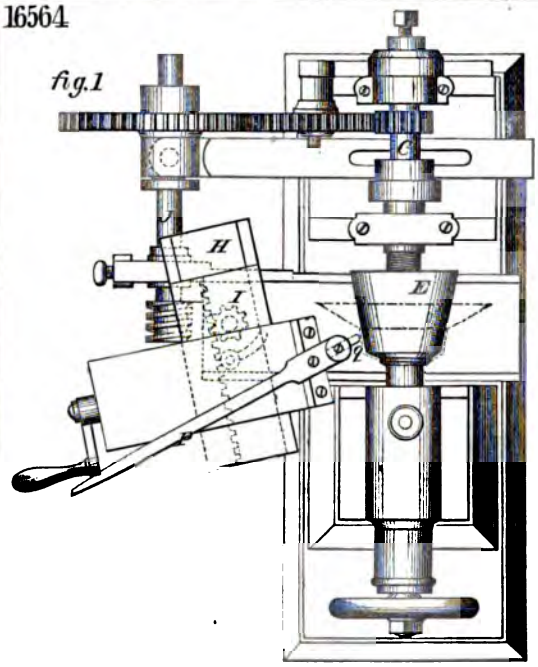

fig.2

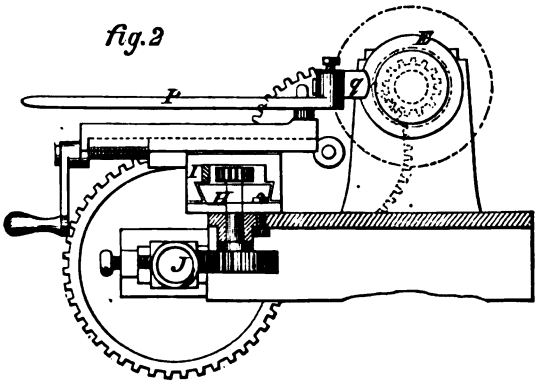

17109

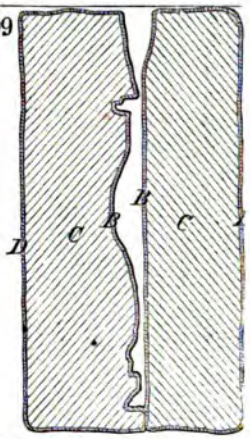

17474

fig.1

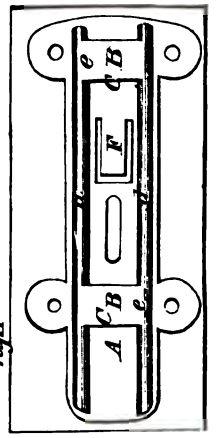

fig.2

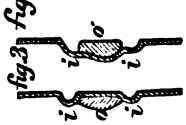

fig.3

16868

fig.2

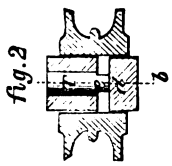

fig.1

17694

fig.1

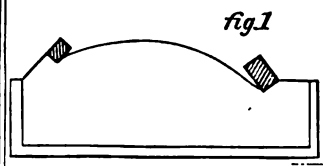

fig.2

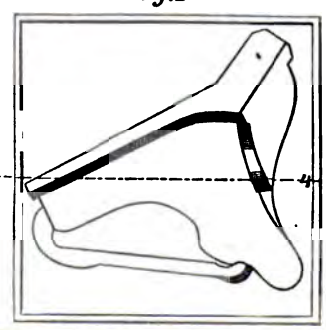

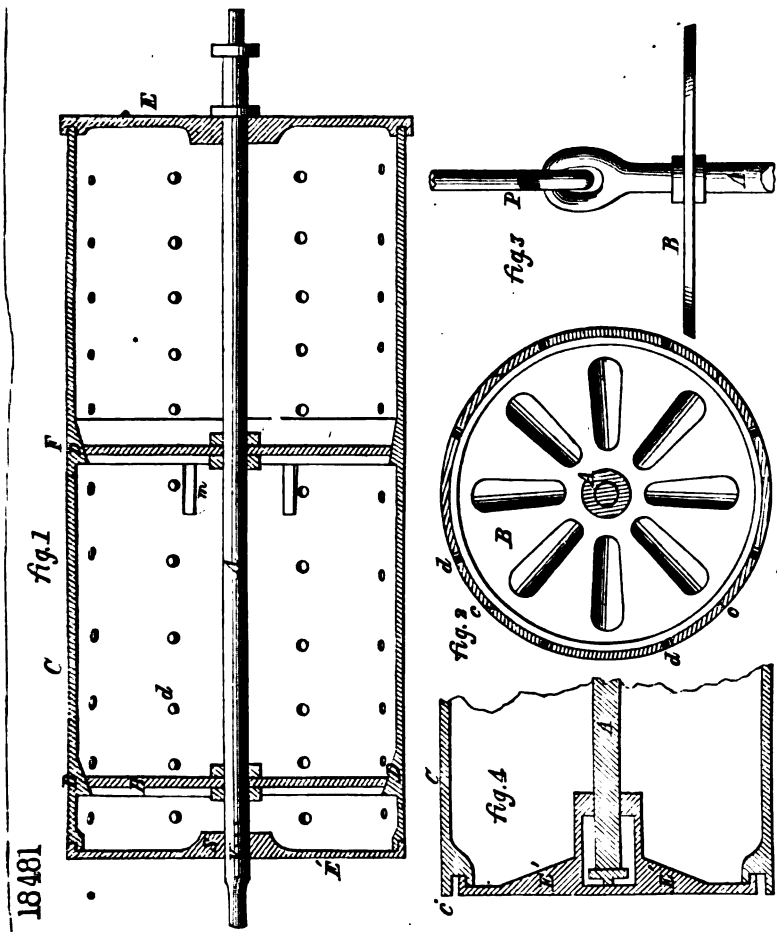
18481
fig.1
fig.2
fig.3
fig.4

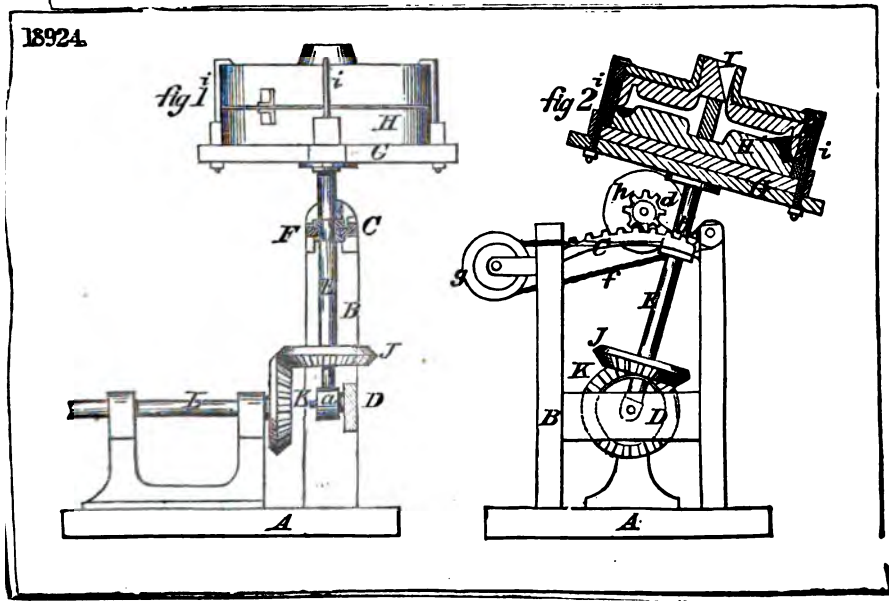
18924.
fig 1
fig 2

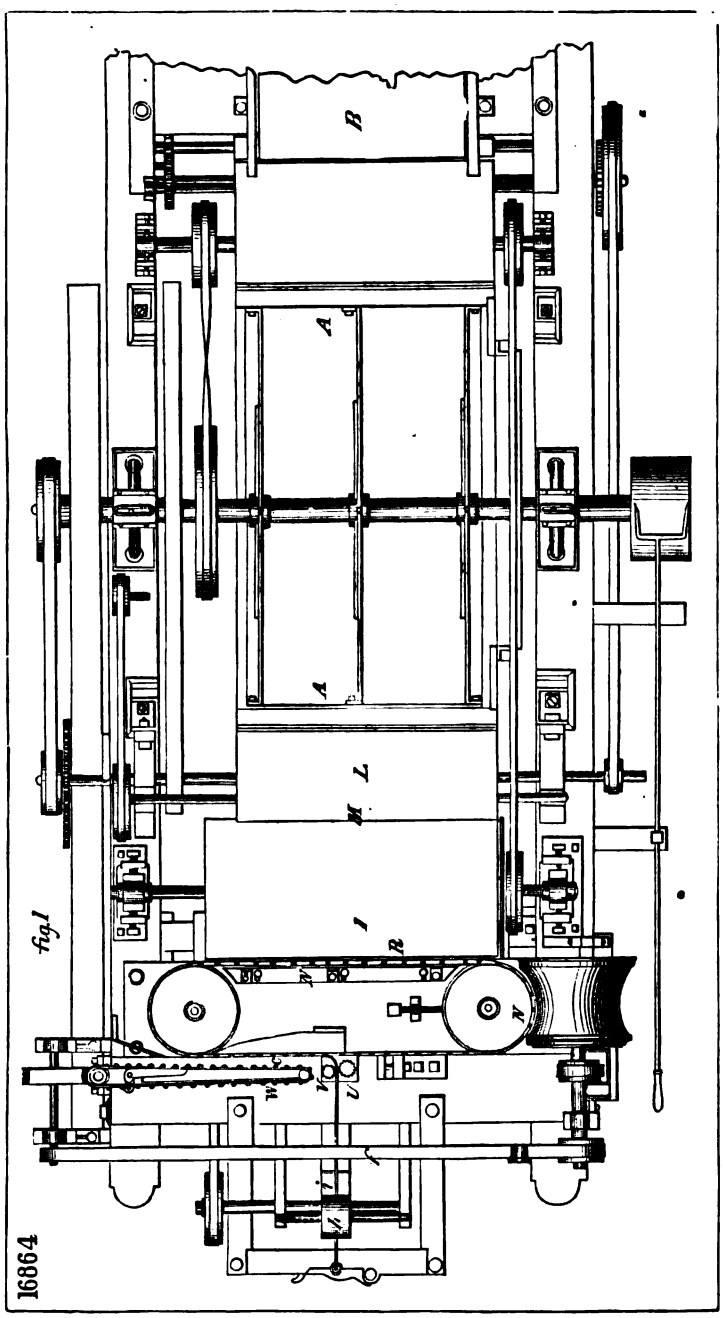

fig. 1

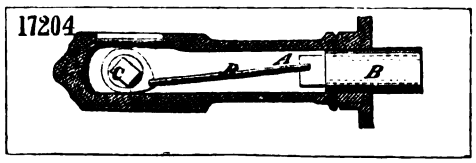

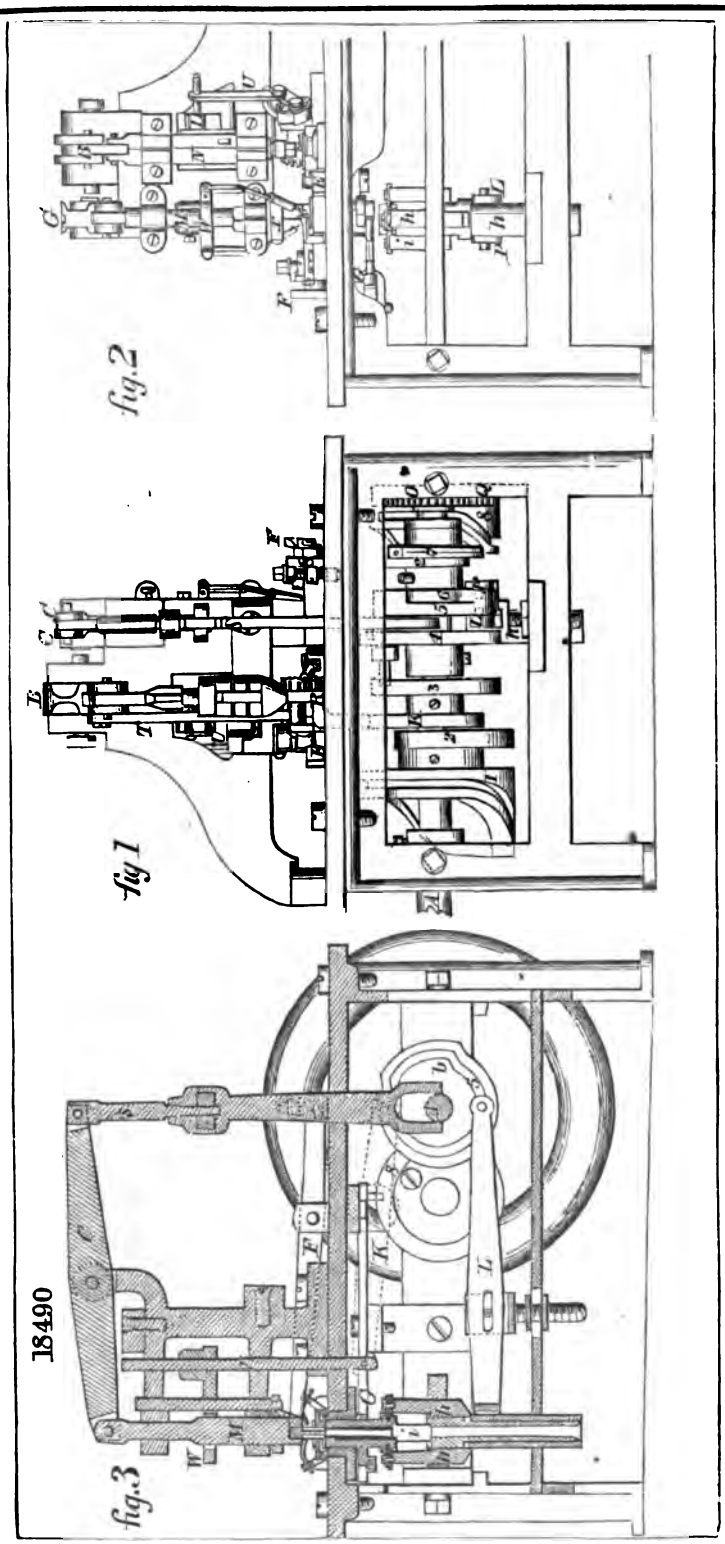
18490
fig.3
fig.1
fig.2

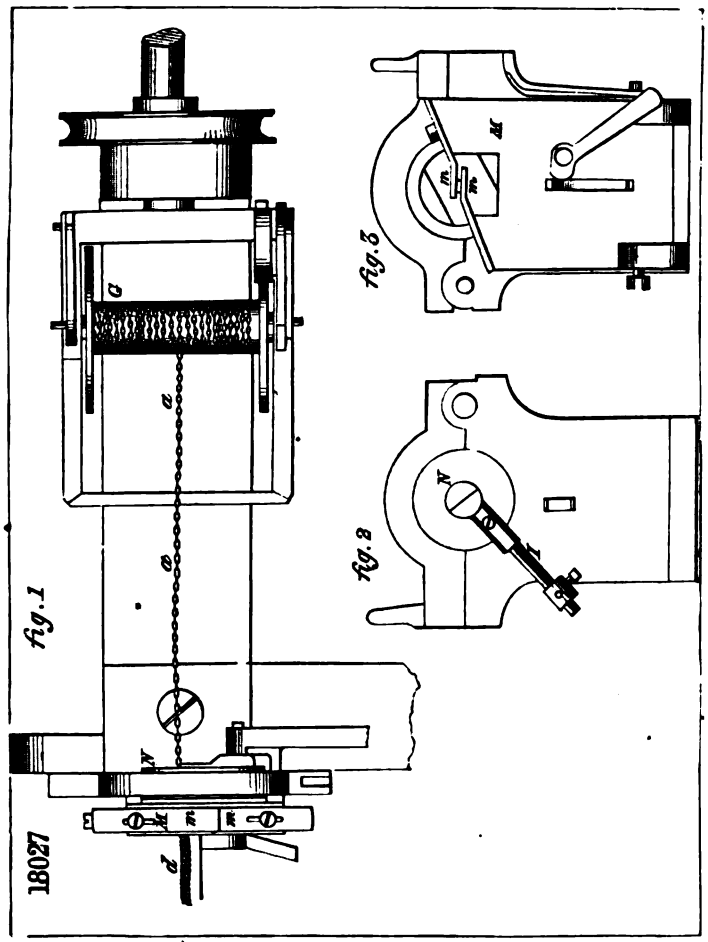
18027
Fig. 1
Fig. 3
Fig. 5

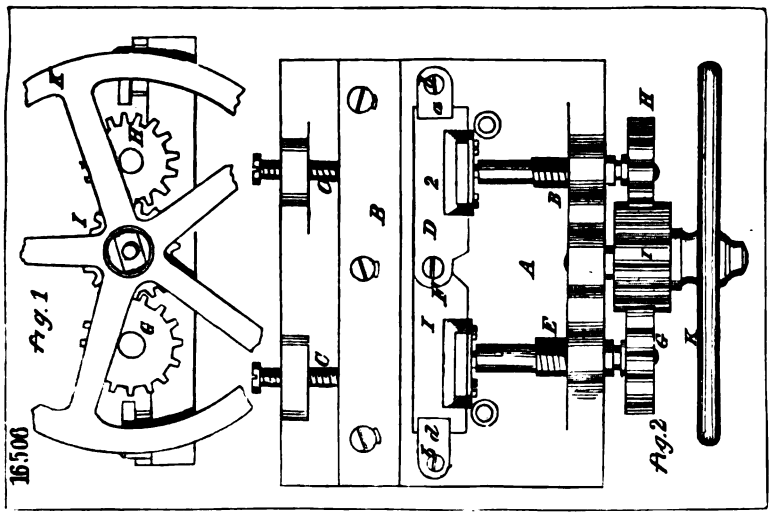
16506
Fig. 1
Fig. 2

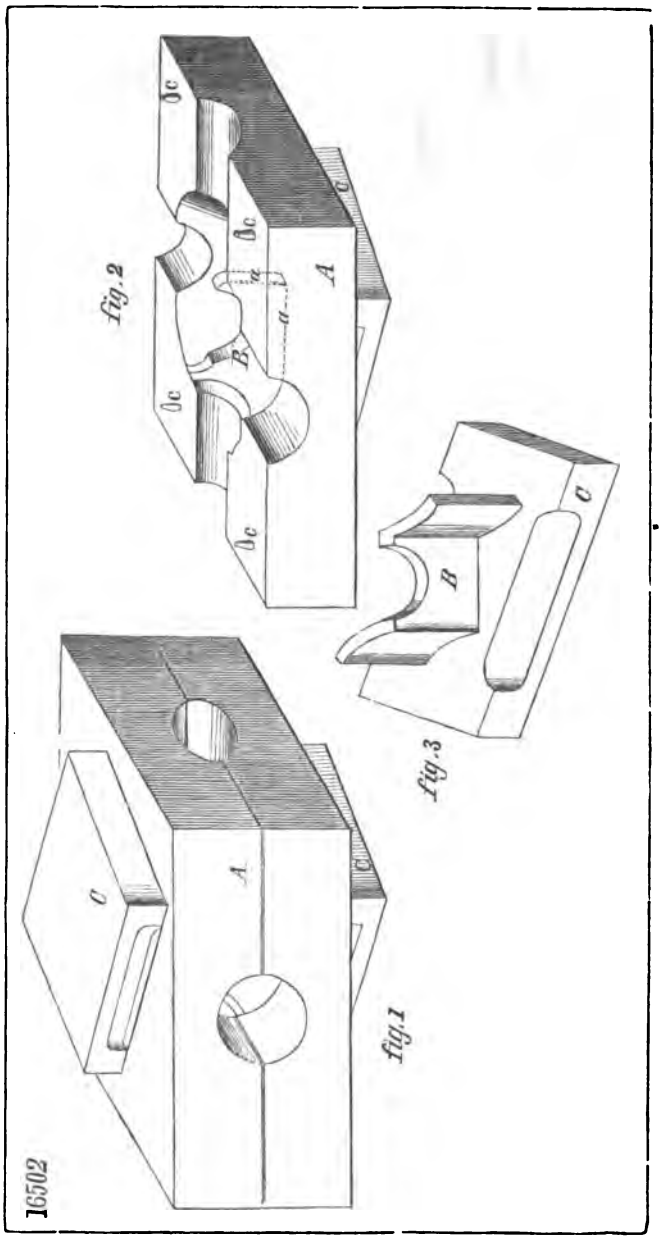
16502
fig.1
fig.2
fig.3
A
B
C
a
b
c

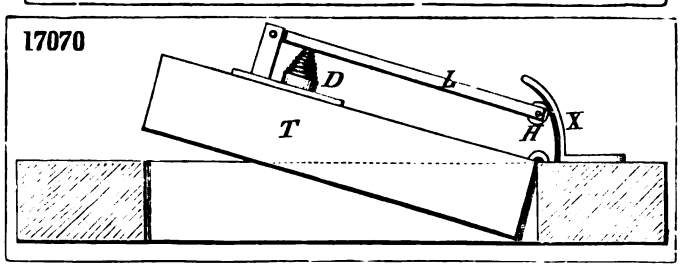
17070
D
T
L
H
X

17464

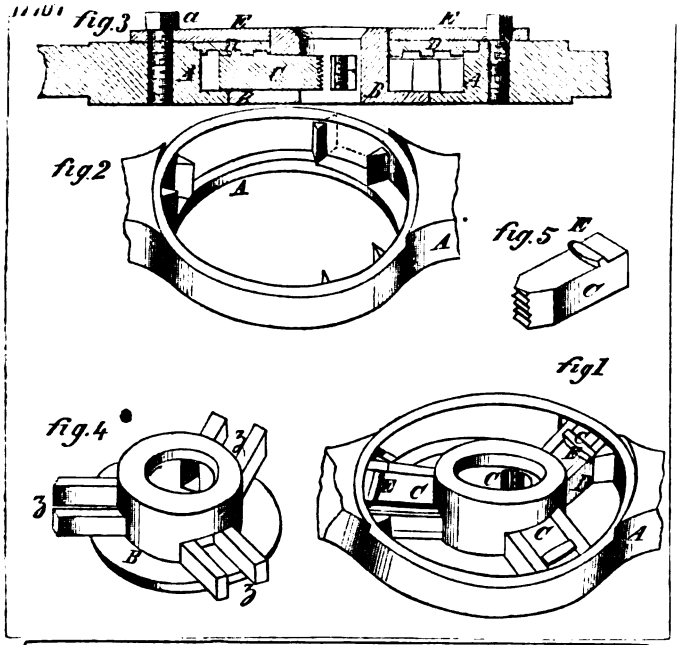

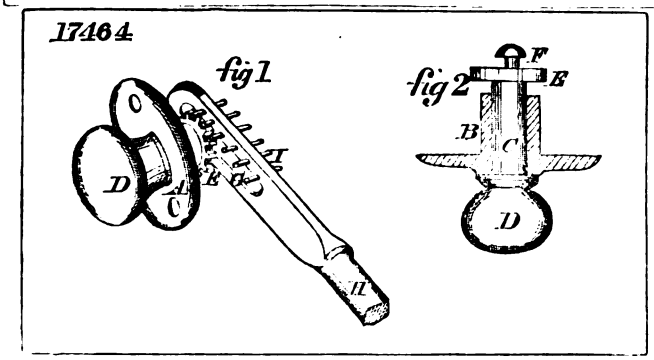

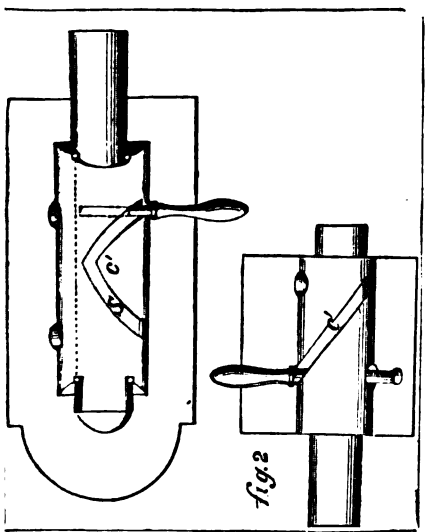

17475

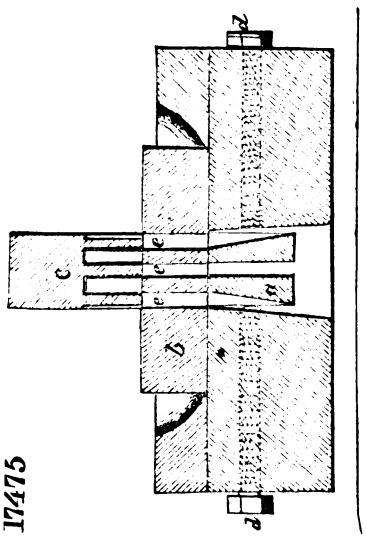

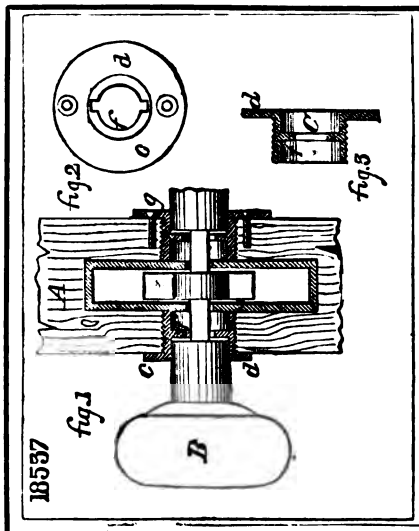
18537
fig.1
fig.2
fig.3

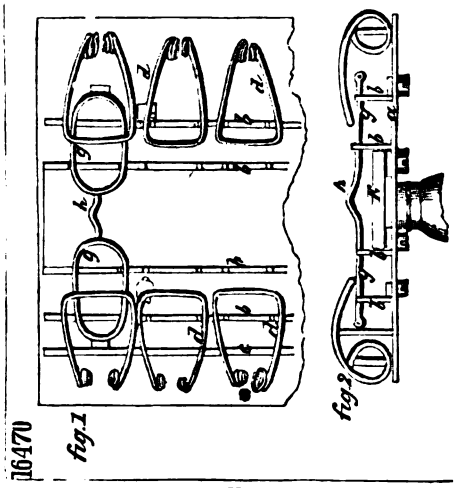
16470
fig.1
fig.2

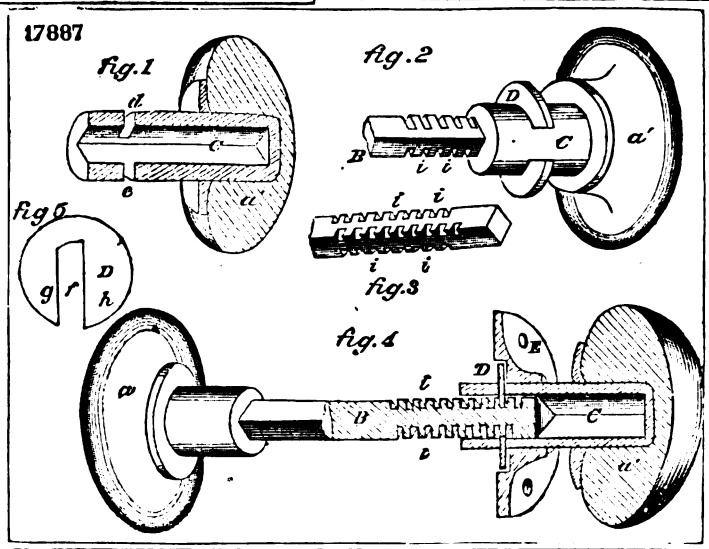
17887
fig.1
fig.2
fig.3
fig.4
fig.5

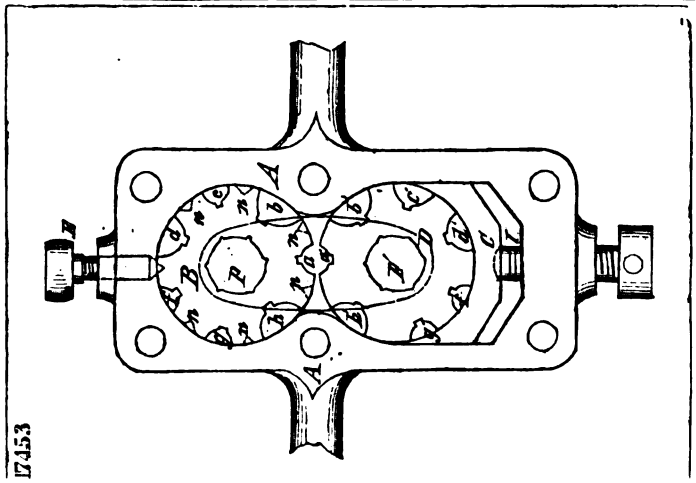
17453

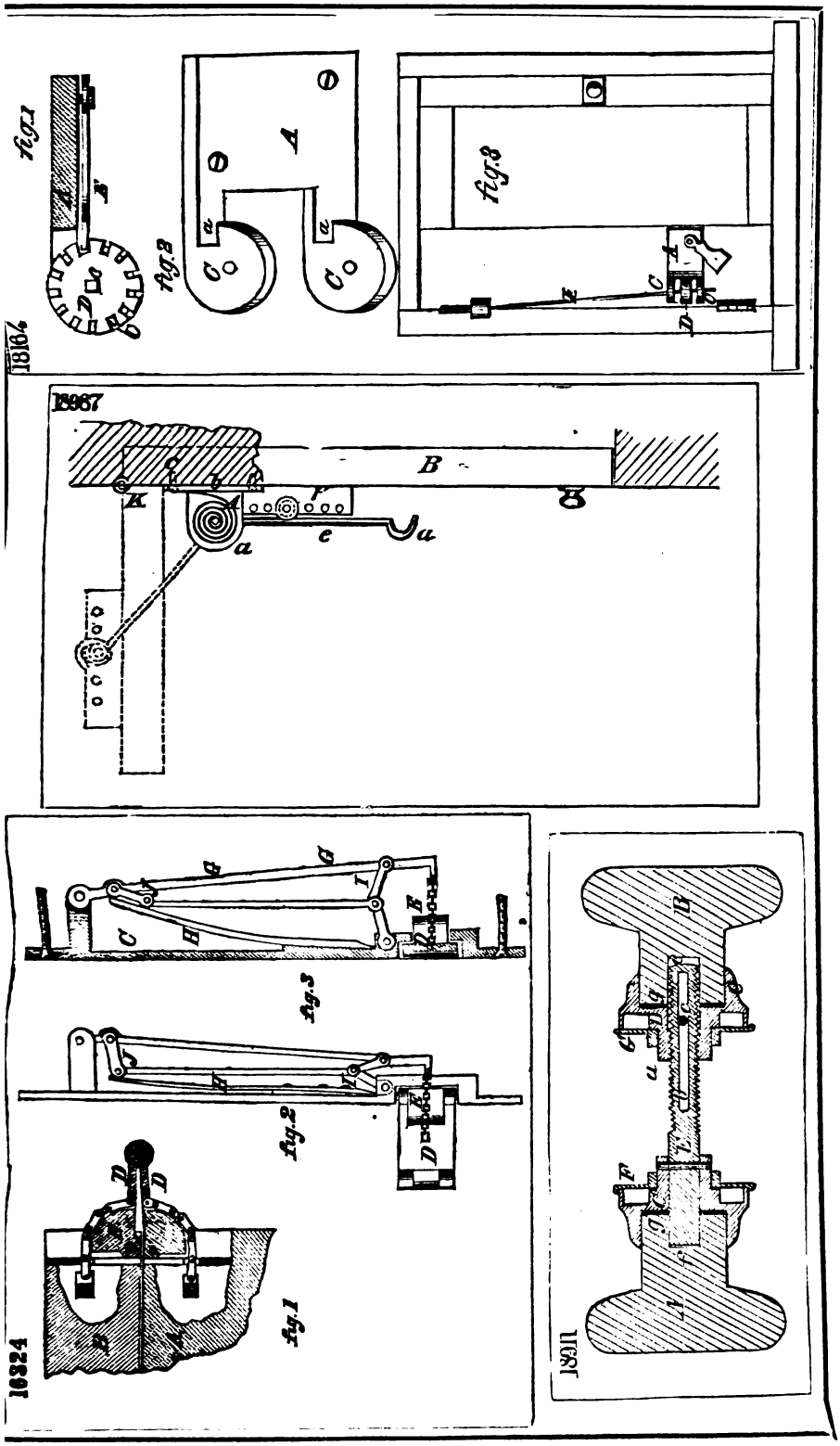
18164
fig.1
fig.2
fig.3
18967
16324
fig.1
fig.2
fig.3
18911

16759

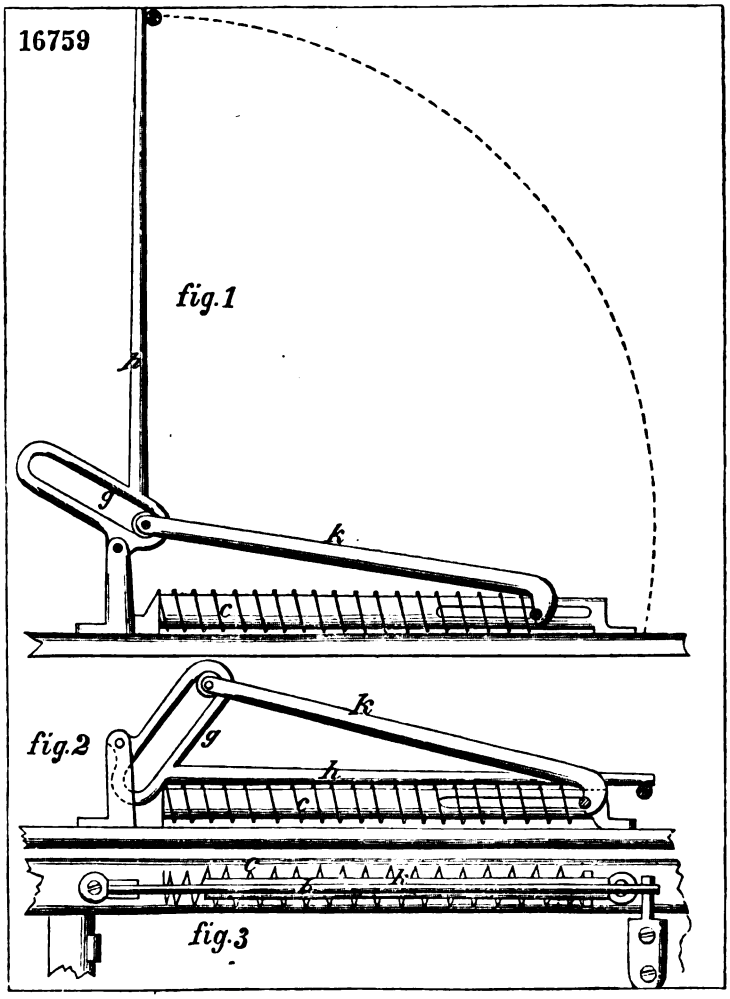

17190

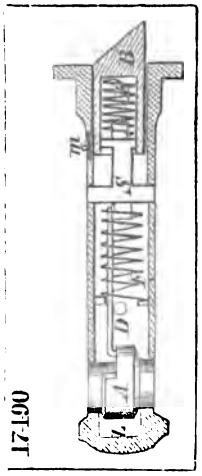

16512

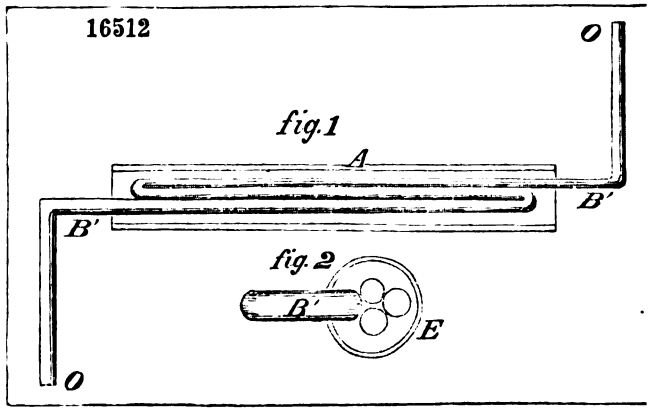

17944 fig.1

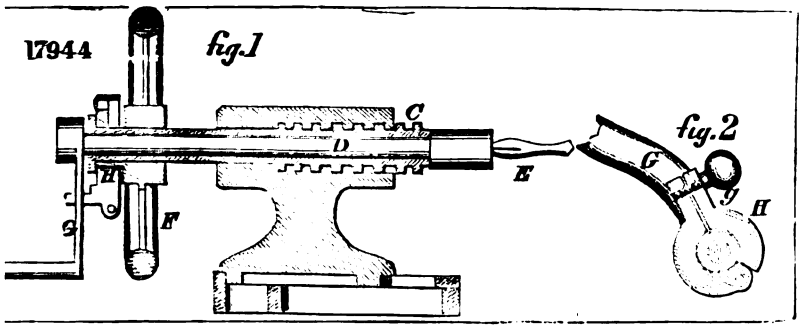

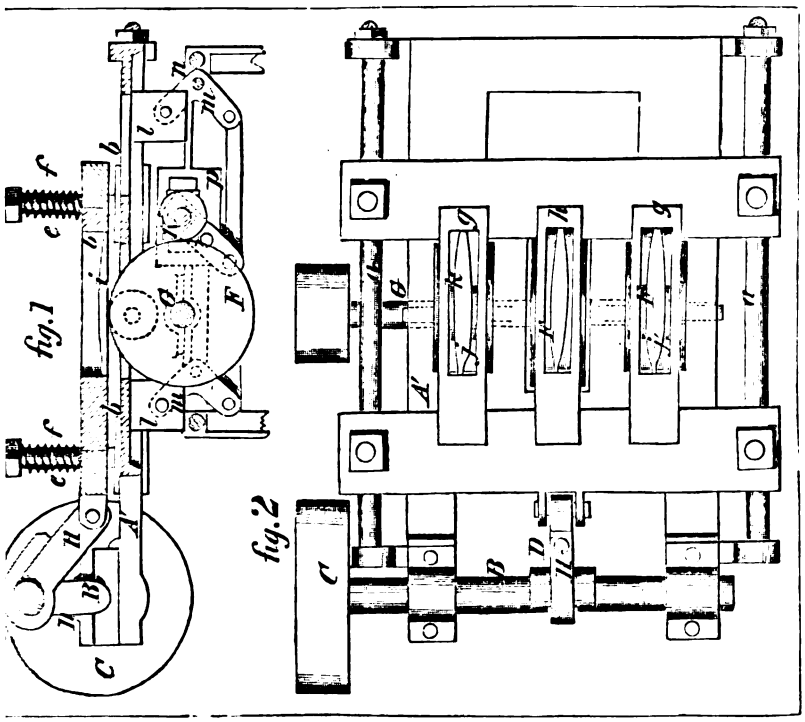

18337 fig.1

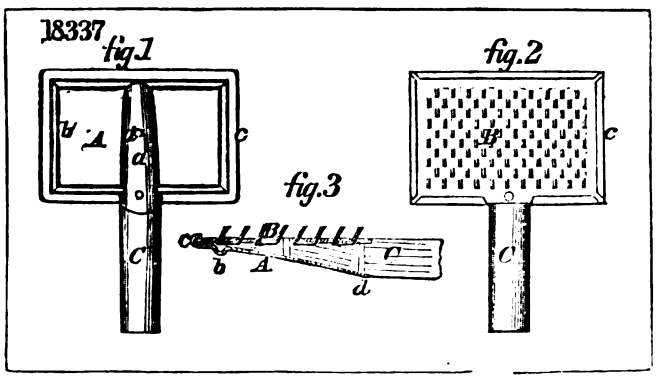

18652

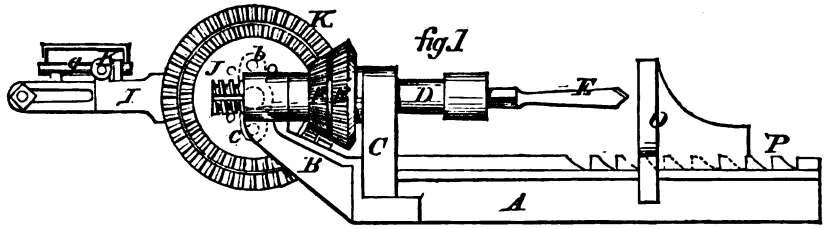
fig.1
K
J
b
I
D
E
C
B
A
O
P

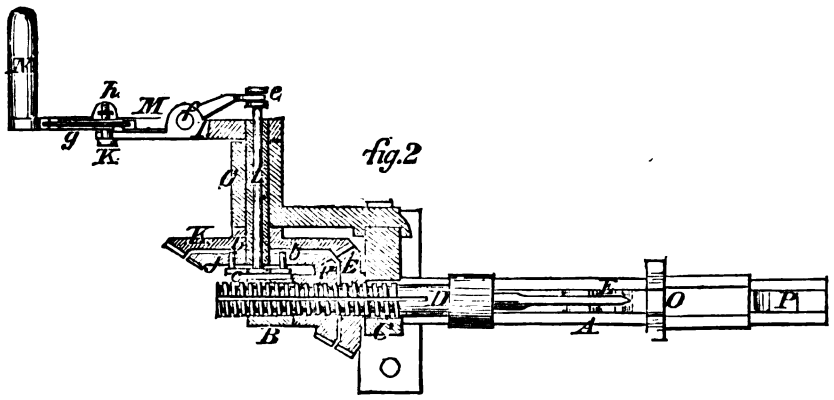
fig.2
h
M
e
g
K
E
D
O
P
B
A

16900

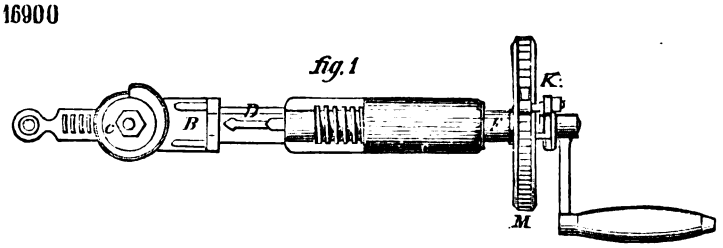
fig.1
B
D
K
M

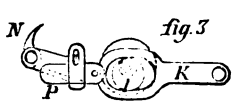
fig.3
N
P
K

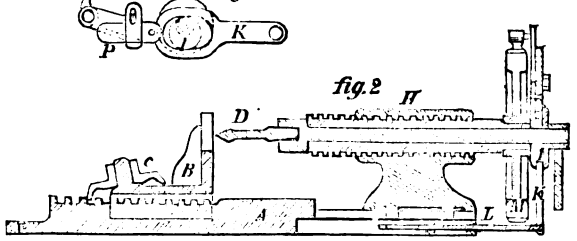
fig.2
H
D
B
A
L
K

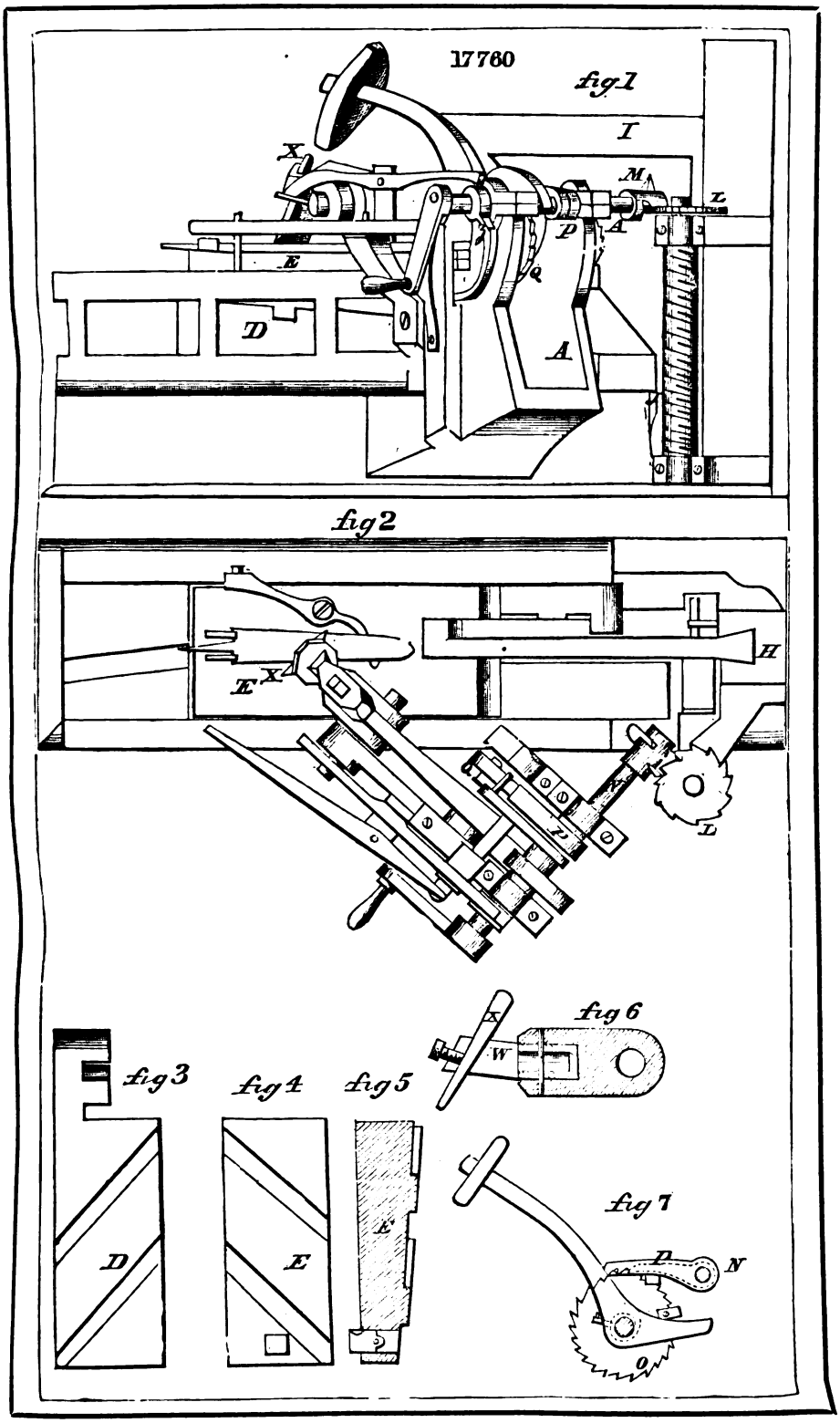
17760
fig 1
I
X
M
L
P
A
E
Q
D
A
fig 2
H
E
X
L
fig 3
fig 4
fig 5
fig 6
W
fig 7
D
E
K
D
N
O

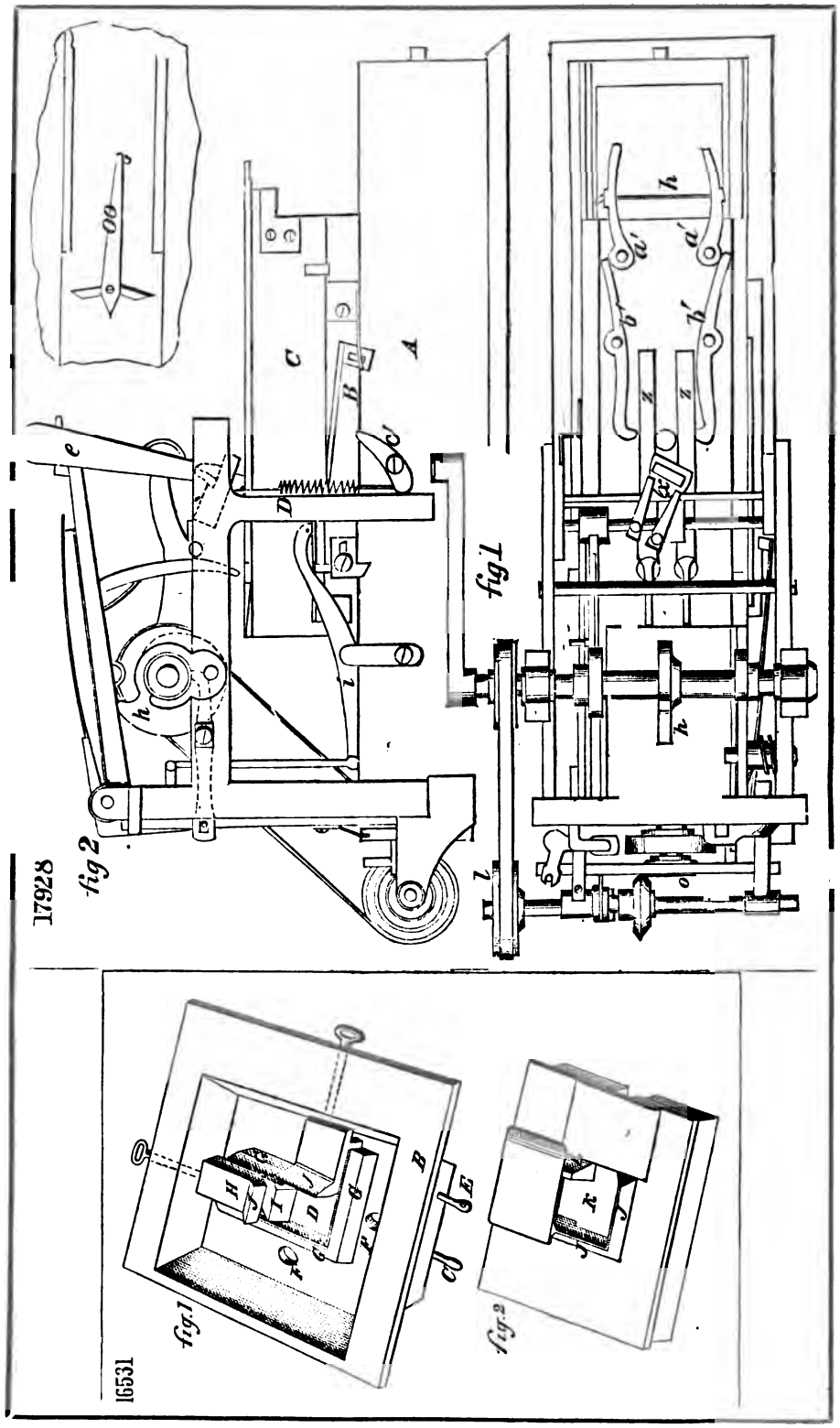
17928
fig 2
fig 1
16531
fig 1
fig 2

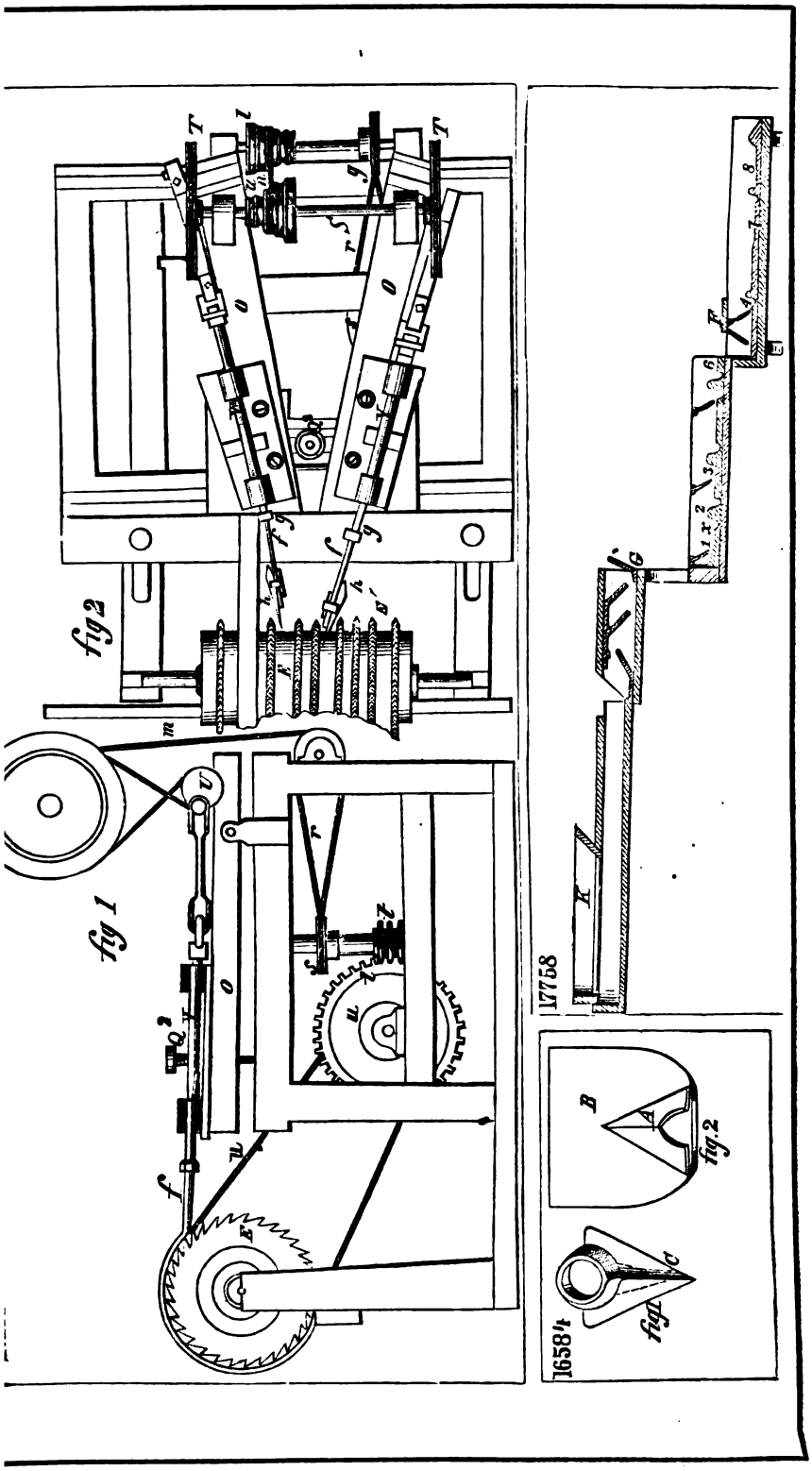
fig 1
fig 2
17758
1658¼
fig.2
fig1

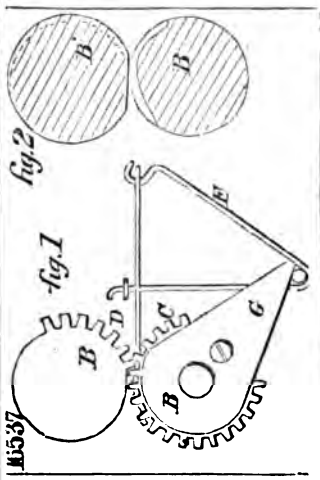
fig.2
fig.1
B
B
B
B
C
D
E
G
16537

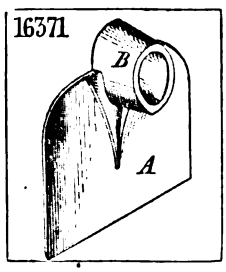
16371
B
A

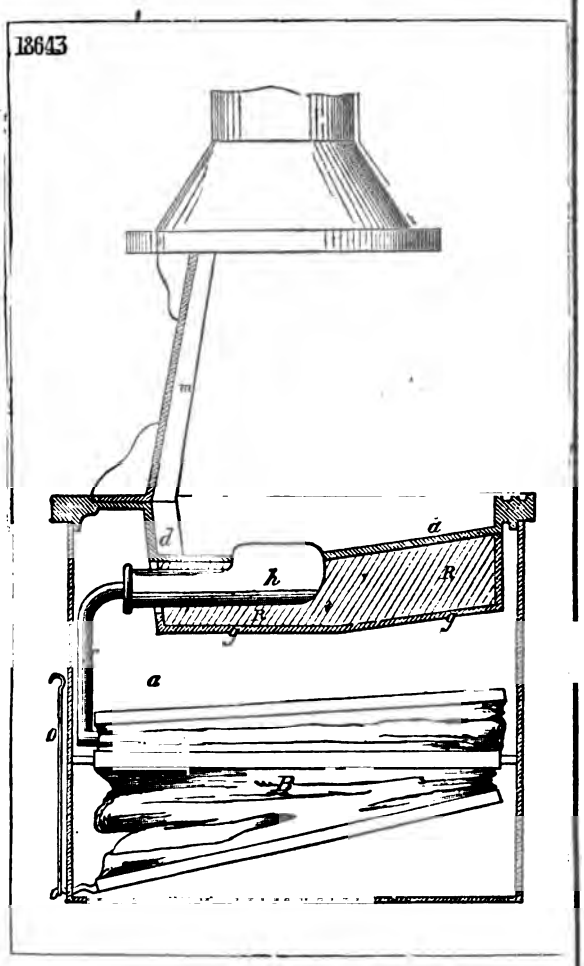
18643
m
d
a
h
R
R
g
g
a
o
B

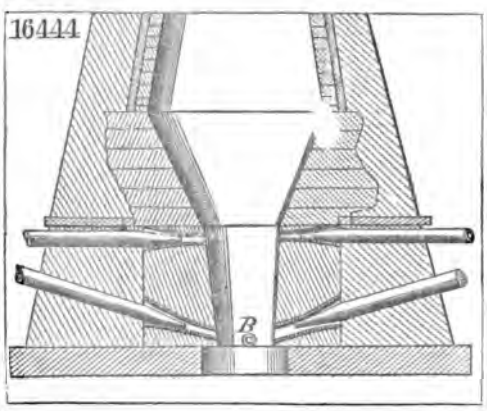
16444
B

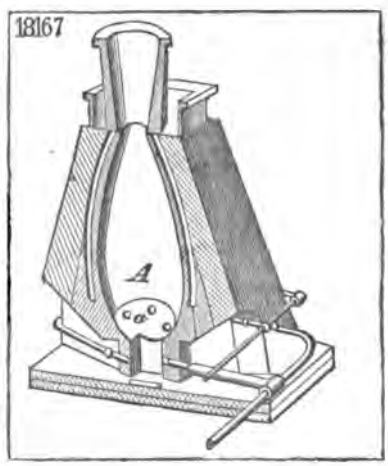
18167
A

16681

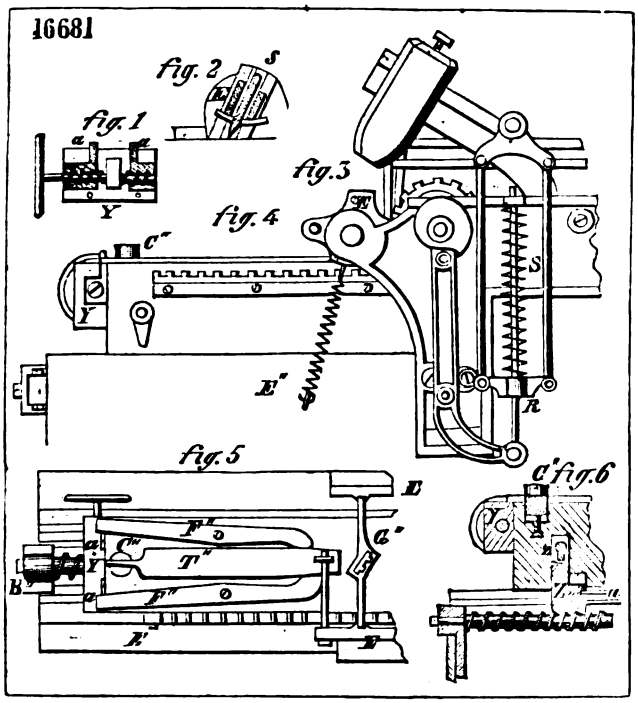

17659

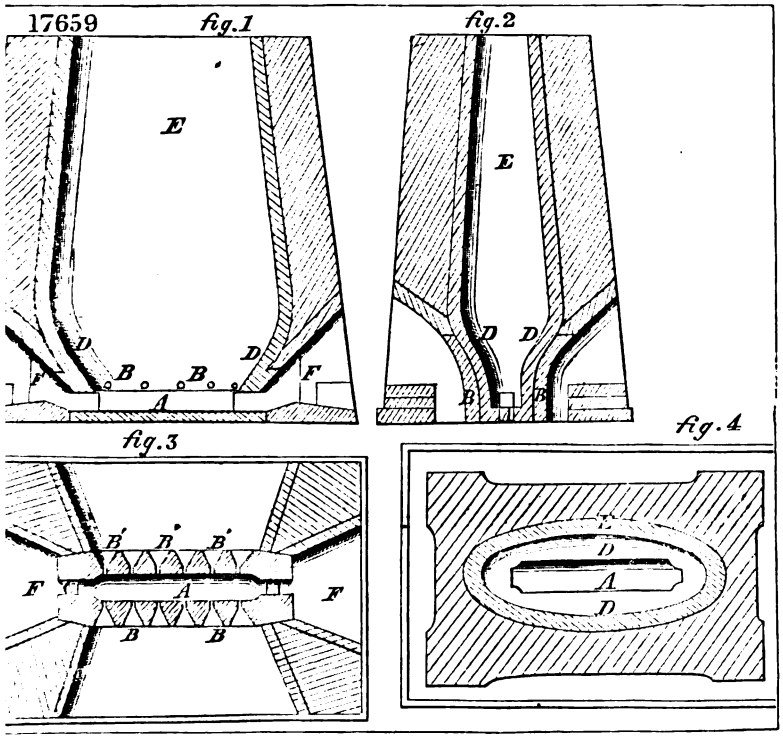

16541.

fig. 2

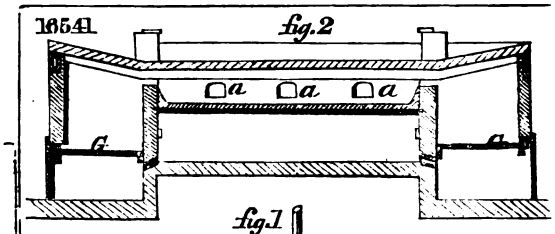

fig. 1

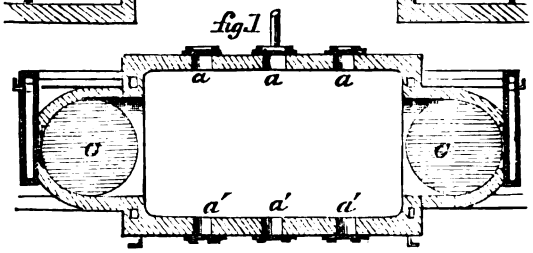

fig. 2

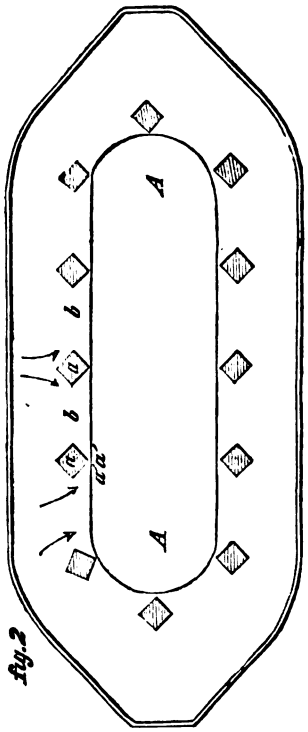

16560

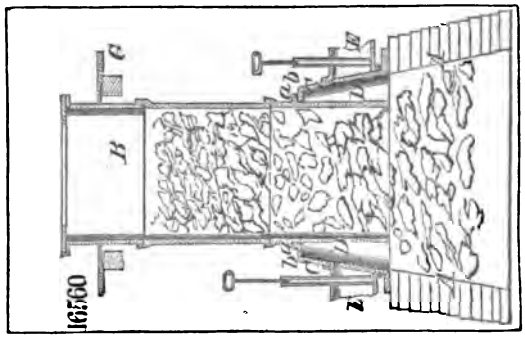

16999

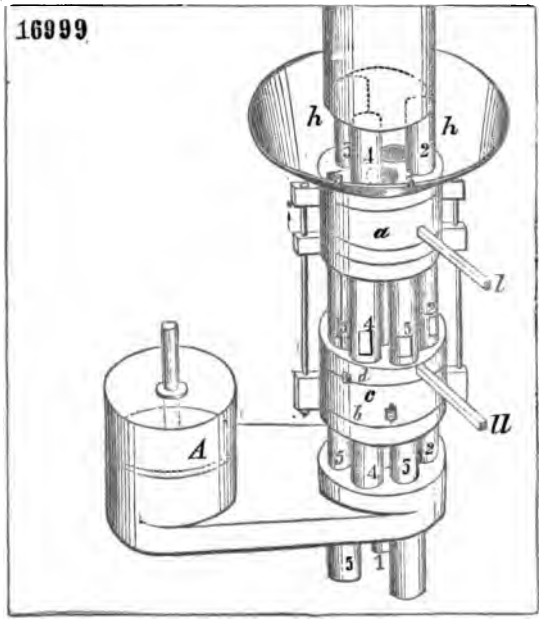

fig. 1

18051.

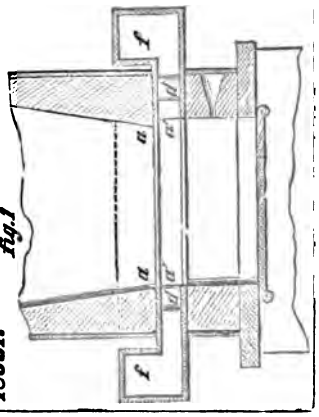

16948

fig.1

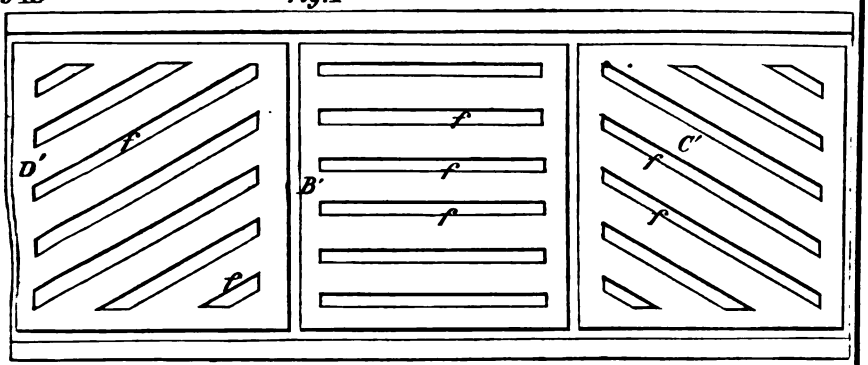

fig.2

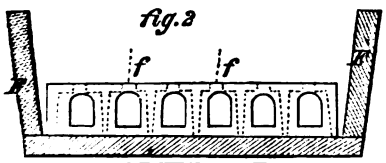

fig.3

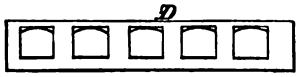

fig.4

11398

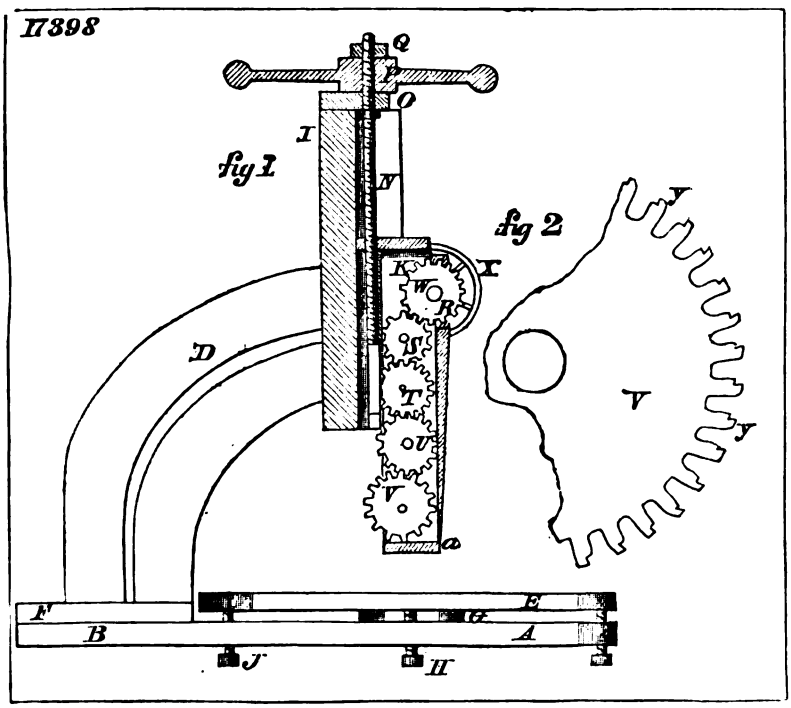

18509

fig 1

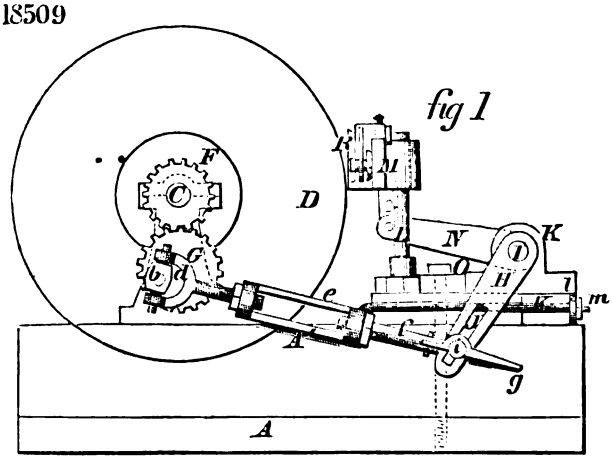

fig 2

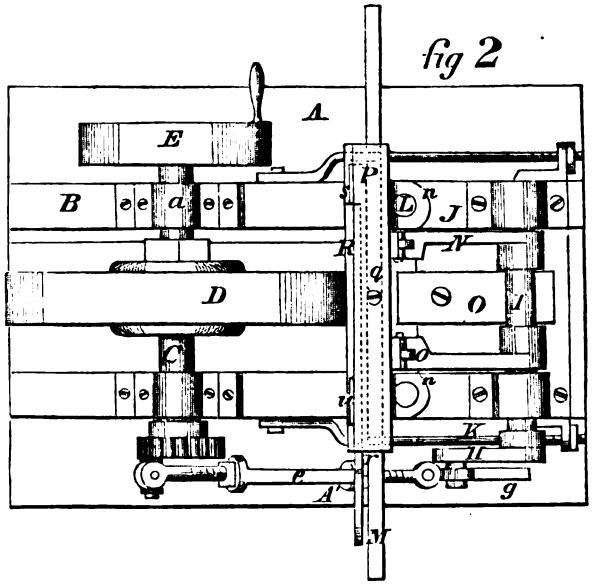

16419

fig.1

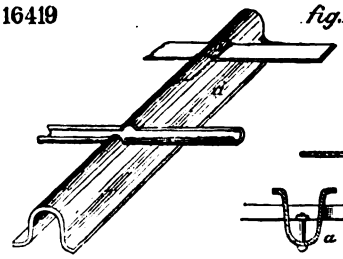

fig.2

fig.3

fig.4

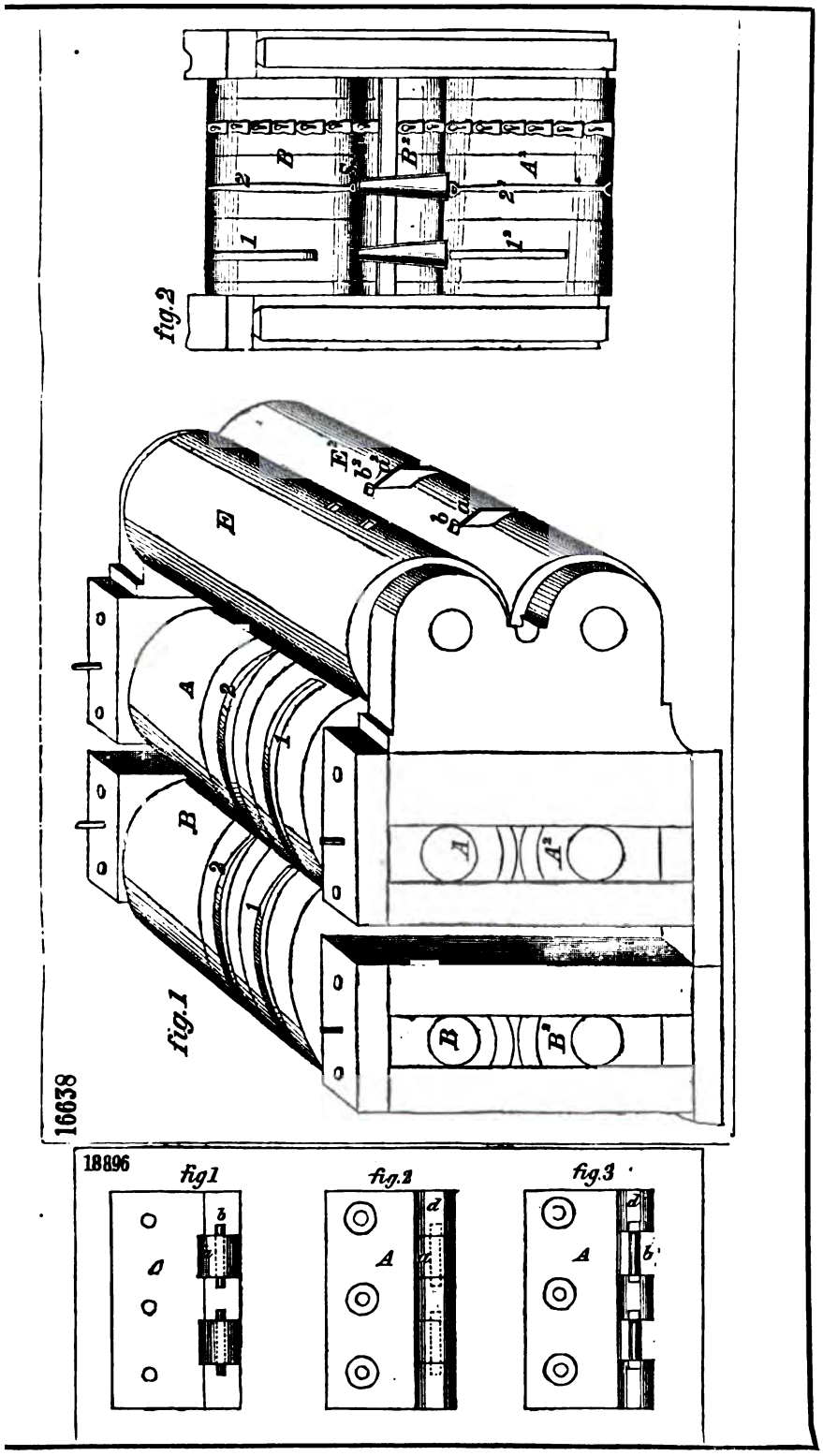
fig.2
fig.1
16638
18896
fig1
fig.2
fig.3

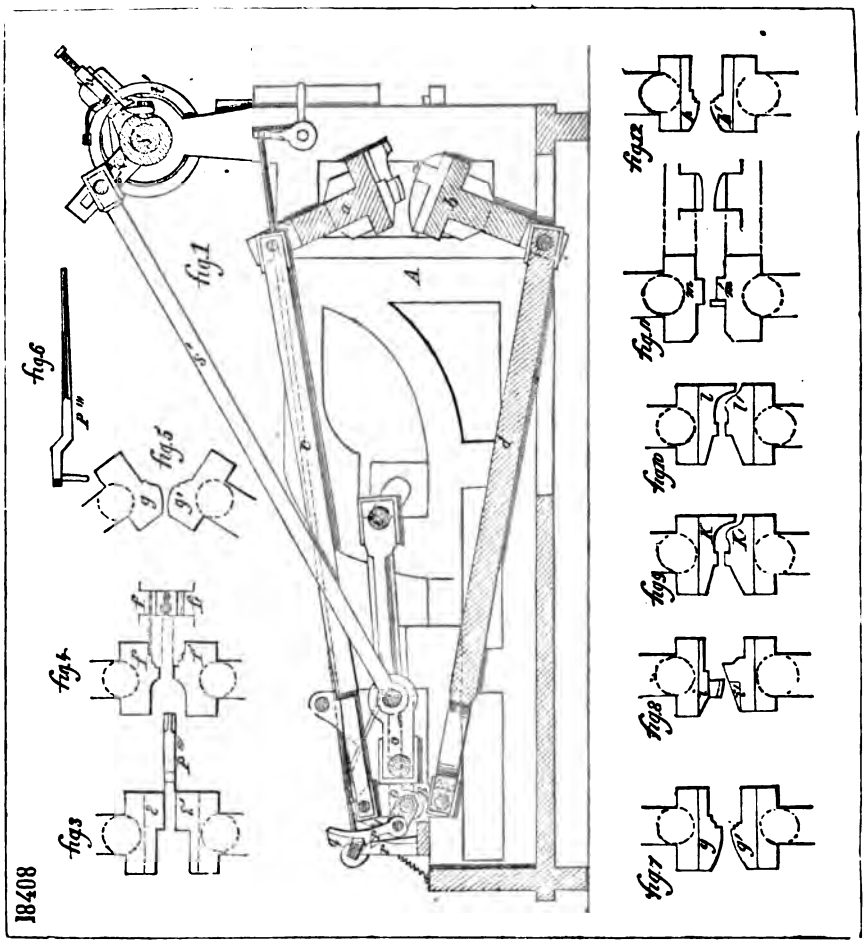
18408
fig1
fig2
fig3
fig4
fig5
fig6
fig7
fig8
fig9
fig10
fig11
fig12

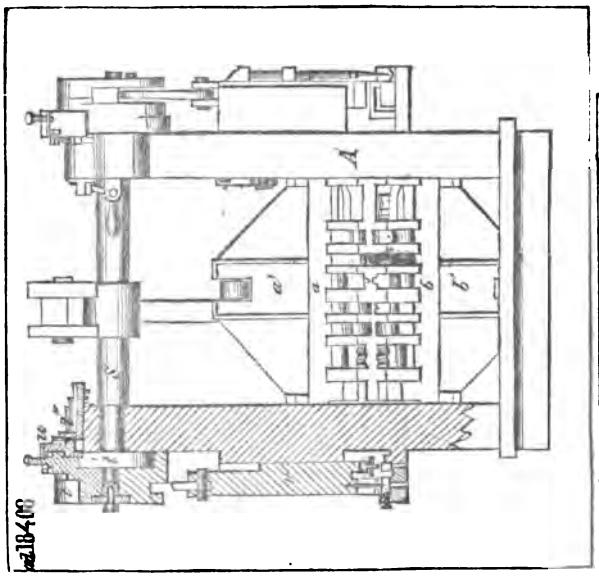
18408

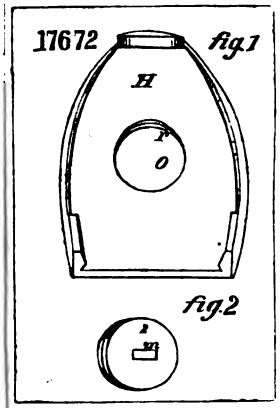
17672
fig.1
H
O
fig.2

16714.

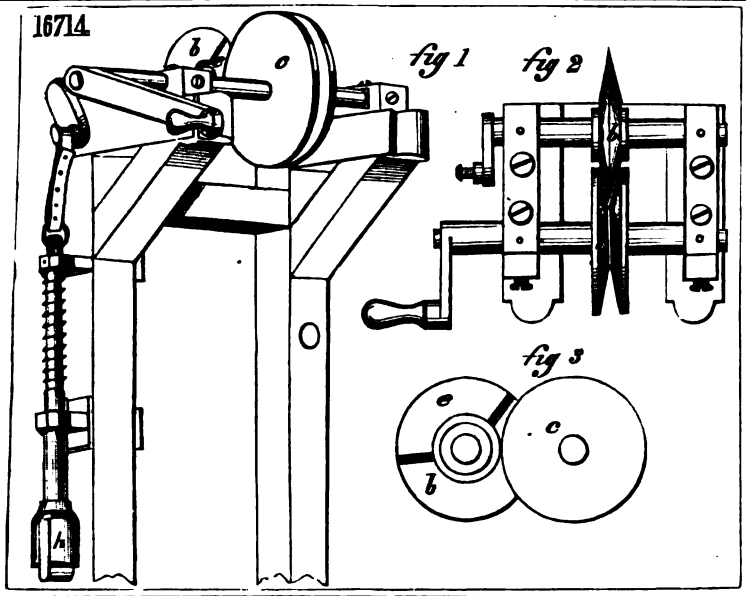

16920

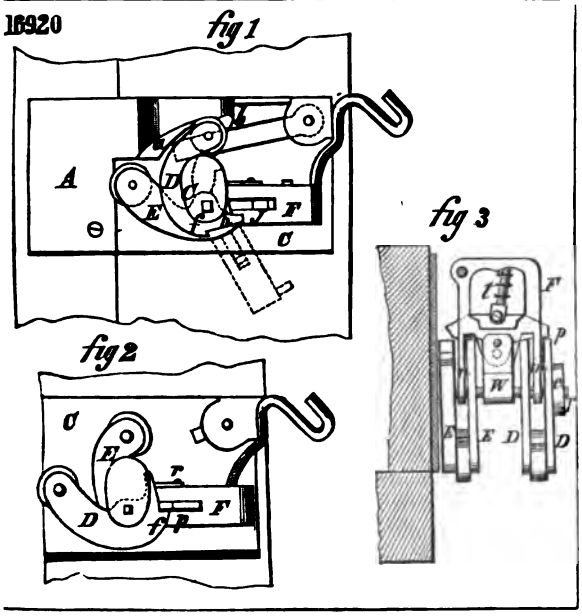

16831

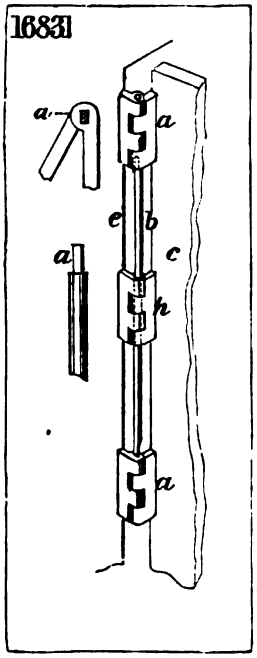

16911

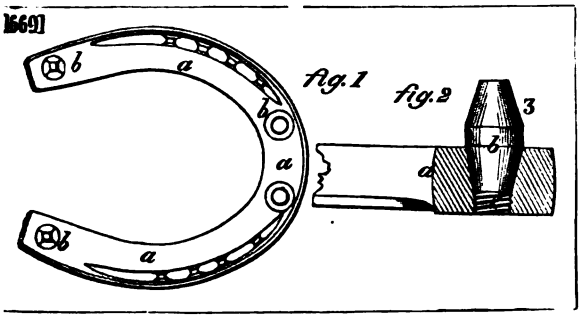

17419

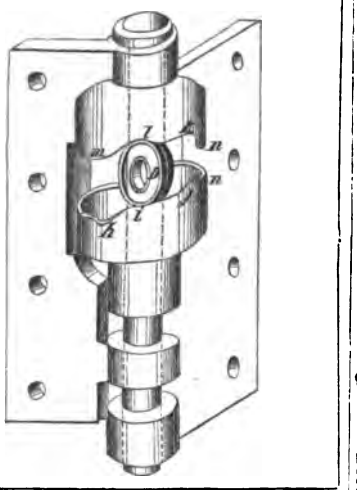

18087

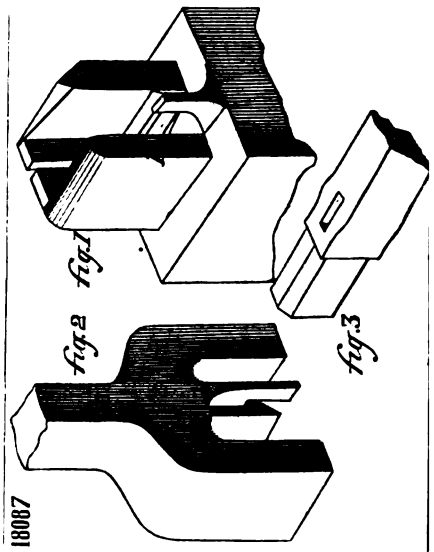

18593

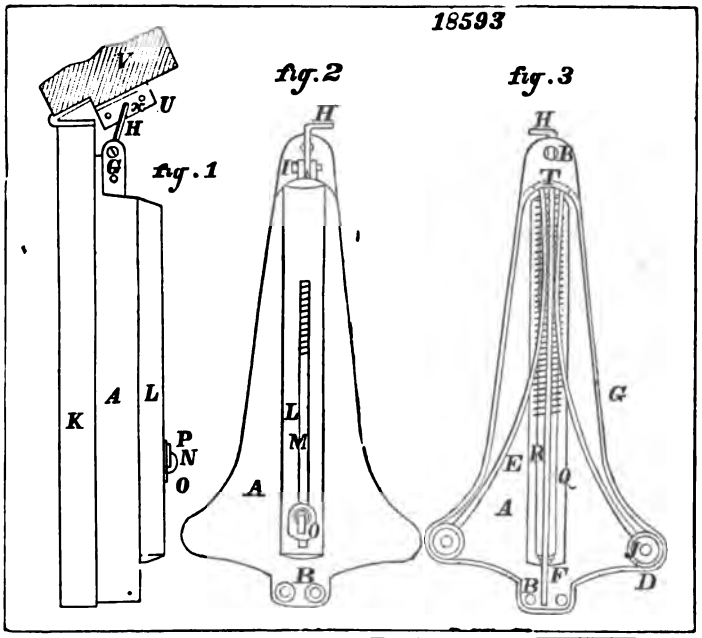

17354

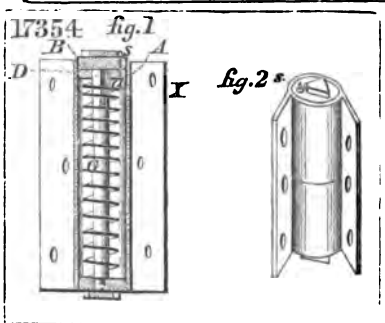

18306

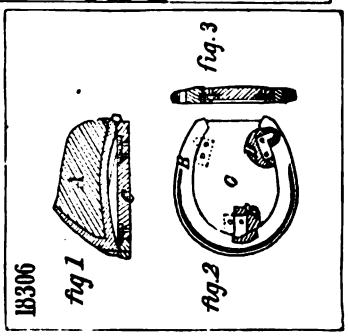

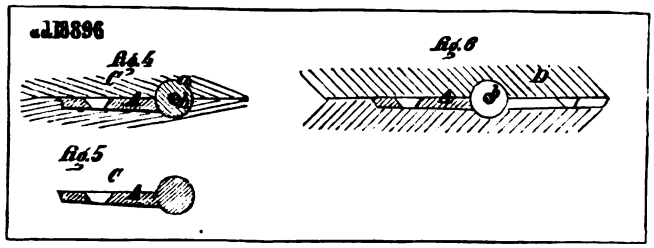

17542

fig.1

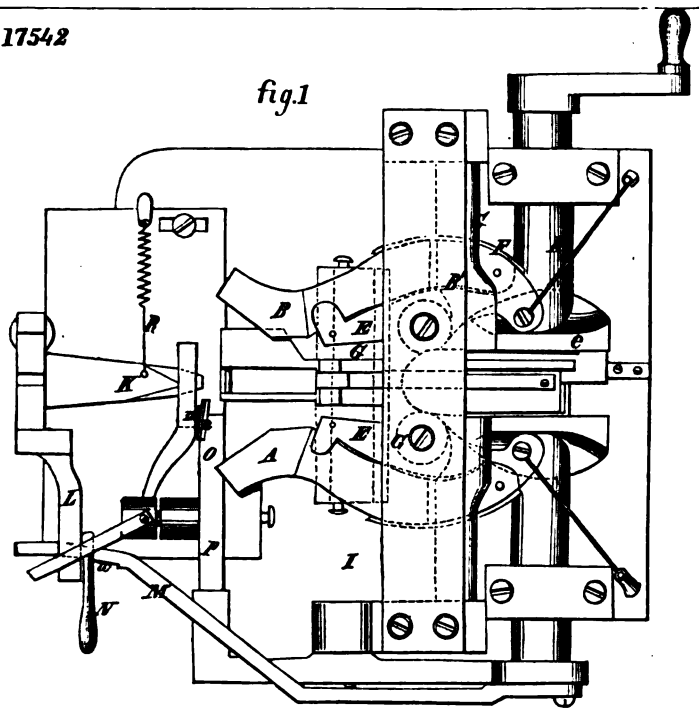

fig.2

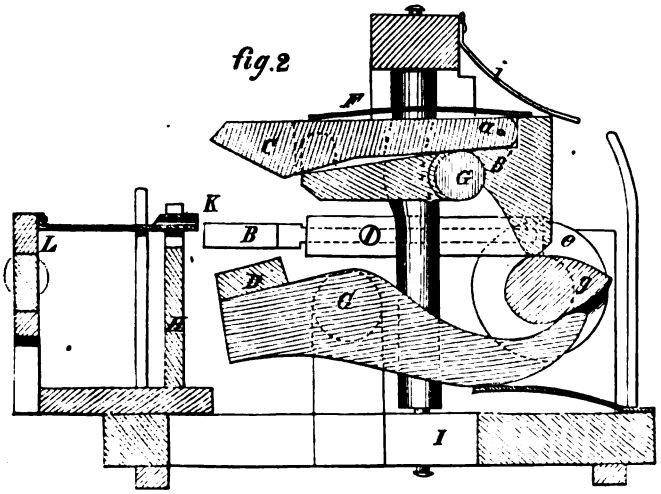

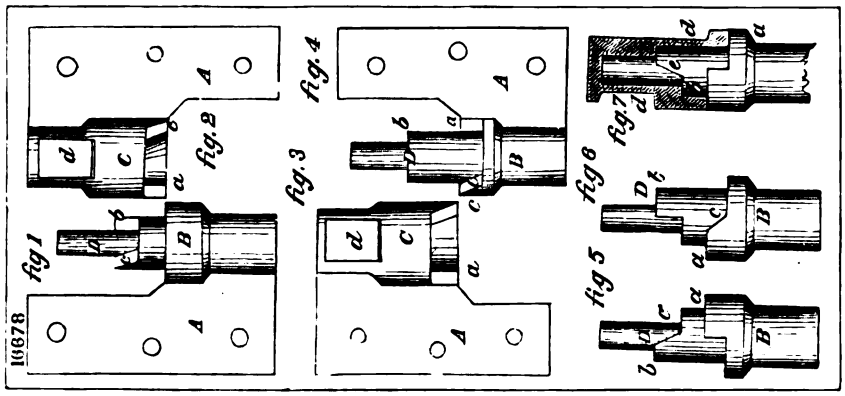
16678
fig 1
fig. 2
fig. 3
fig. 4
fig 5
fig 6
fig. 7

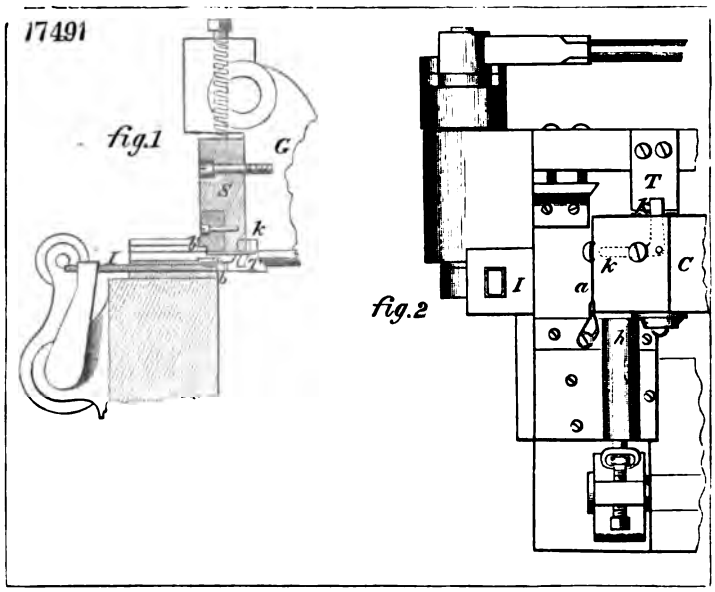
17491
fig.1
fig.2

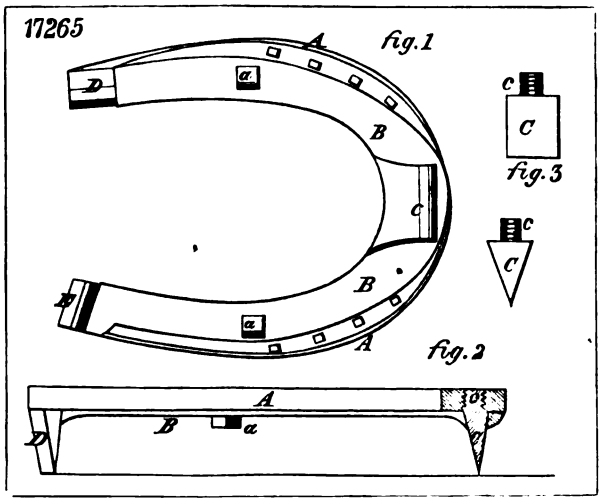
17265
fig.1
fig.2
fig.3

2940

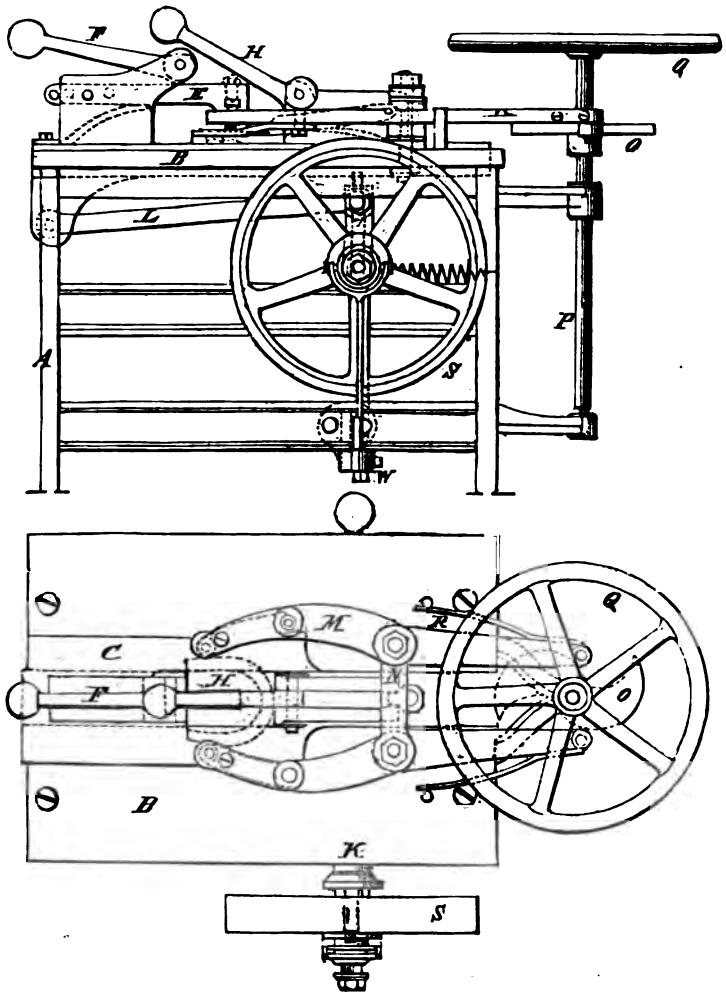

17665

fig.1

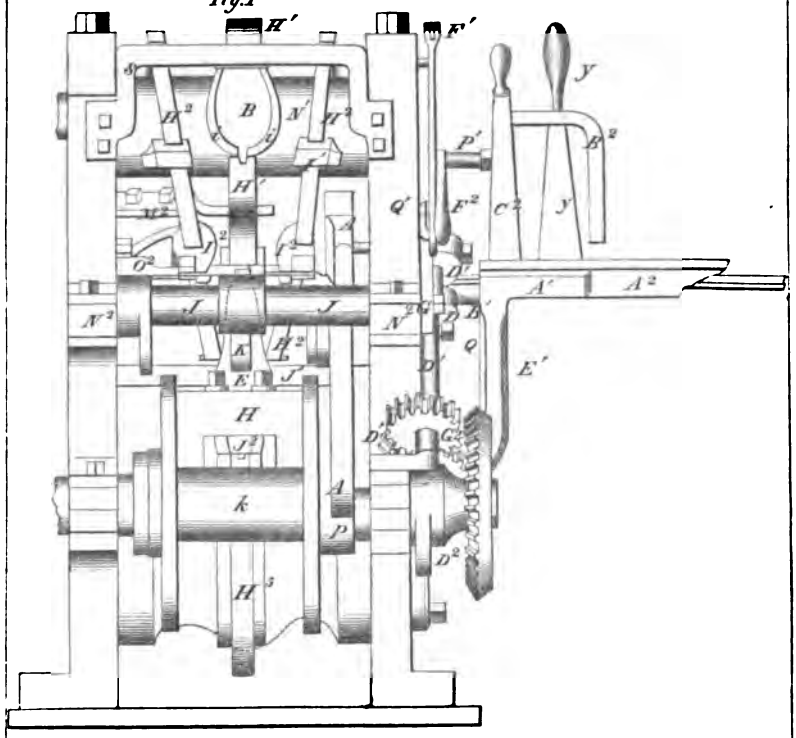

fig.3

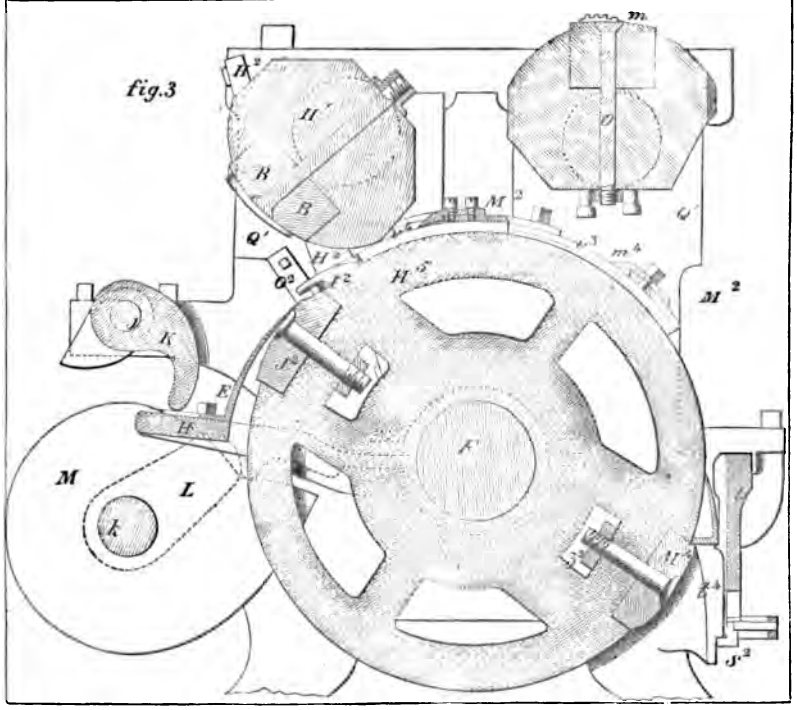

17665

fig.2

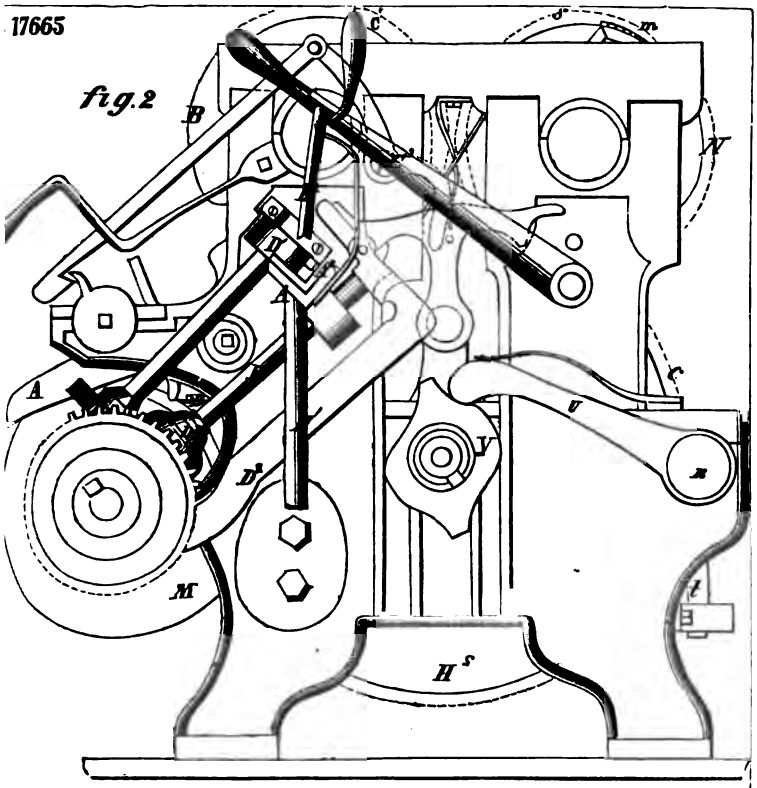

fig.4

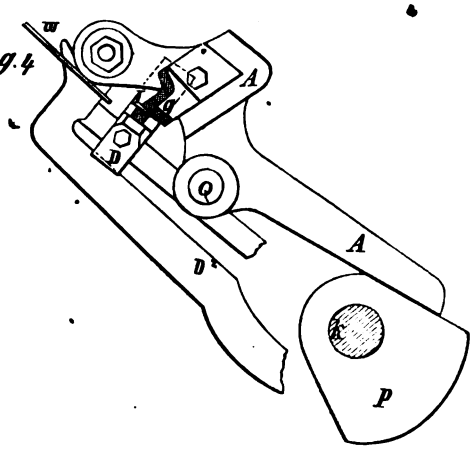

fig.3

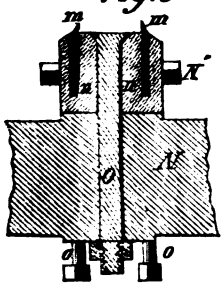

16792

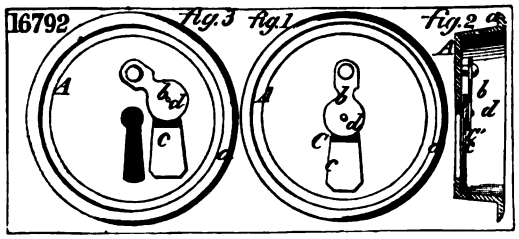

17441

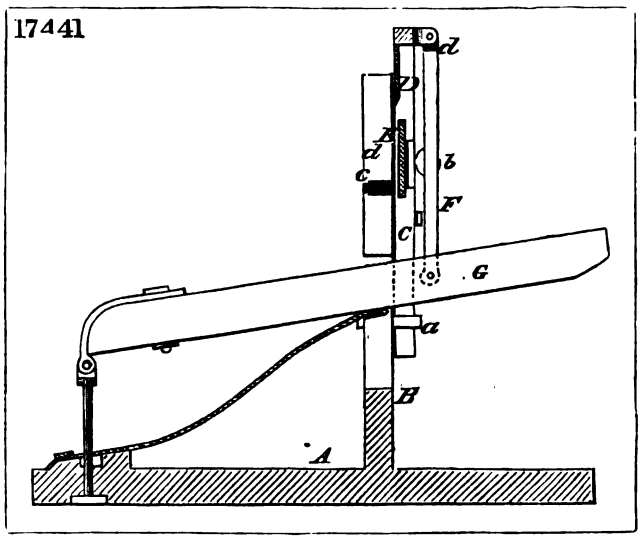

16690

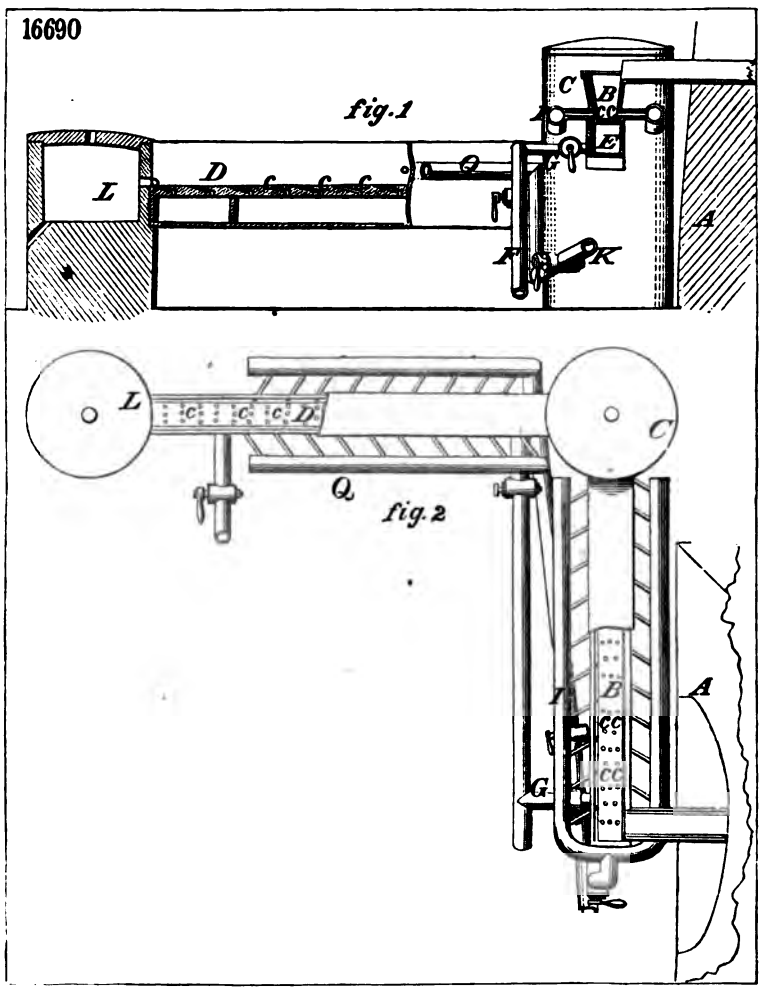

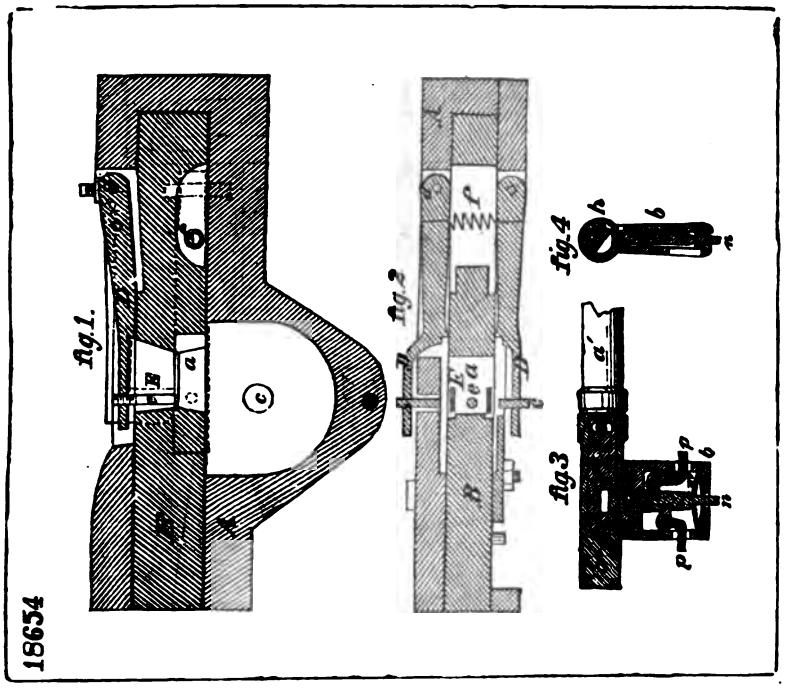
fig.1.
fig.2
fig.3
fig.4
18654

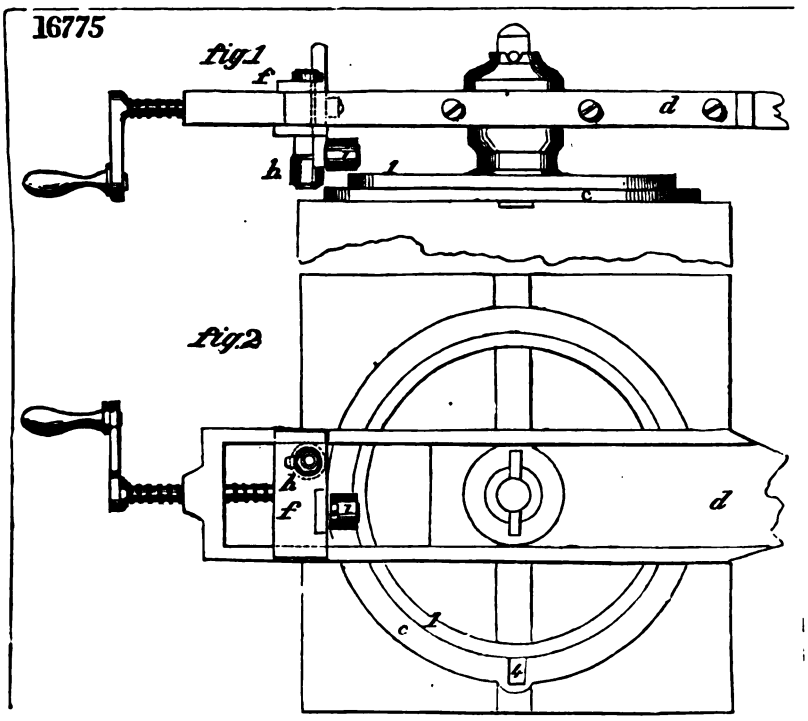
16775
fig.1
fig.2

16679

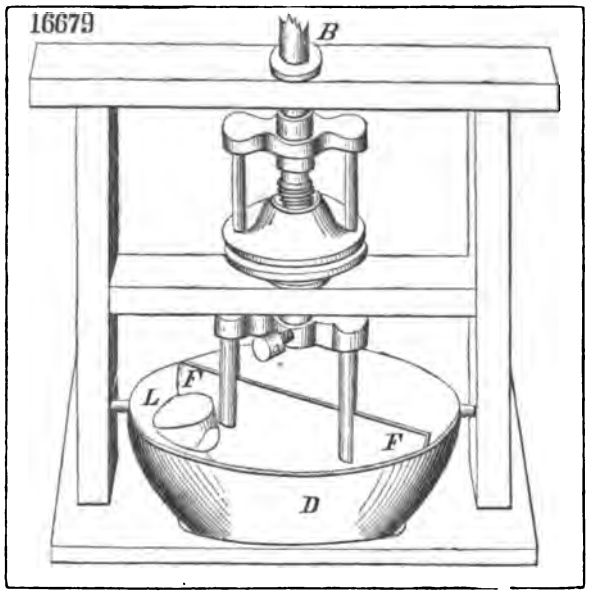

17939

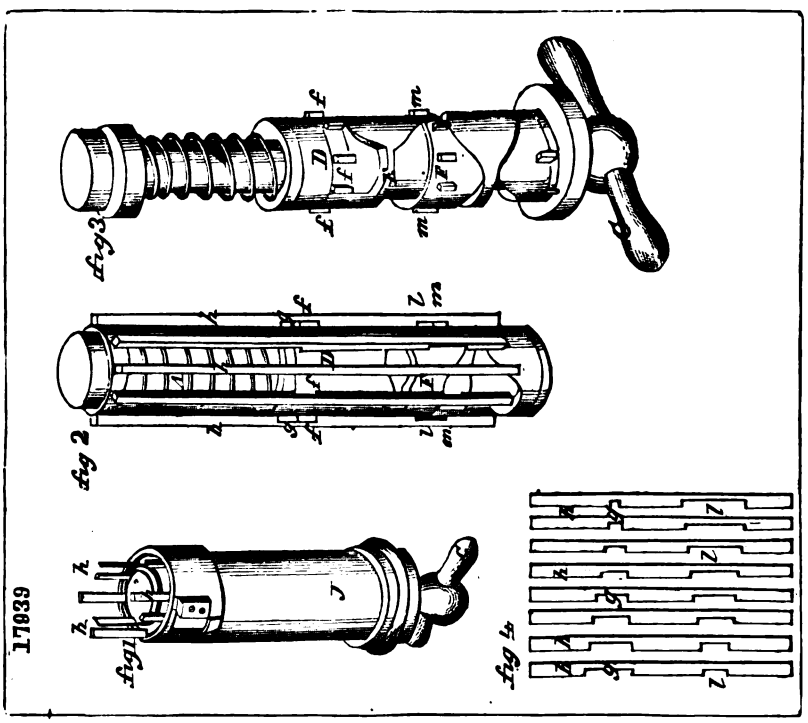

17952

fig.1

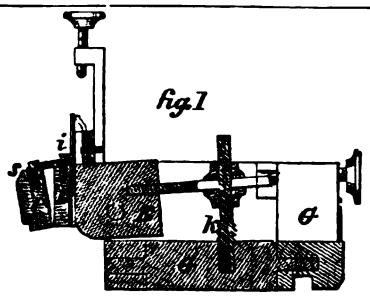

fig.2

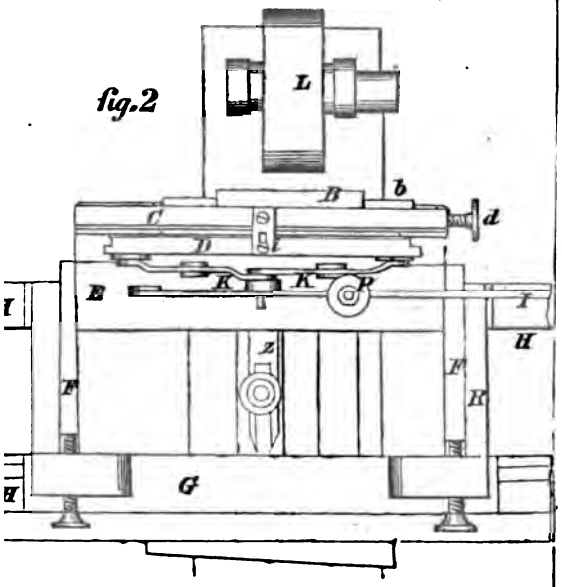

16955

fig.1

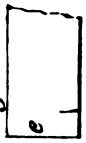

fig.2

4

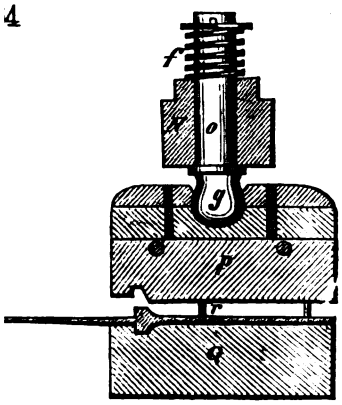

16981

fig.2

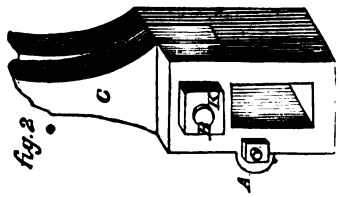

fig.1

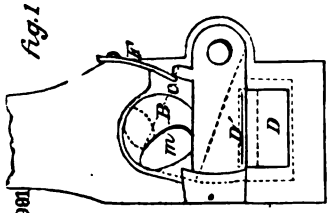

16892

fig.1

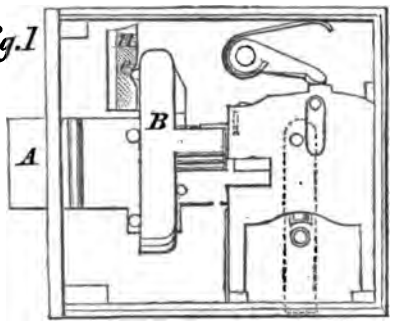

fig.2

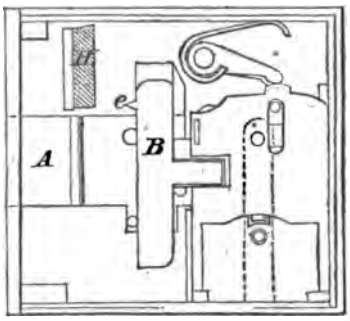

fig.3

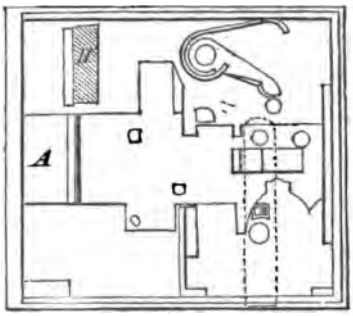

fig.4

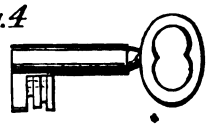

17747

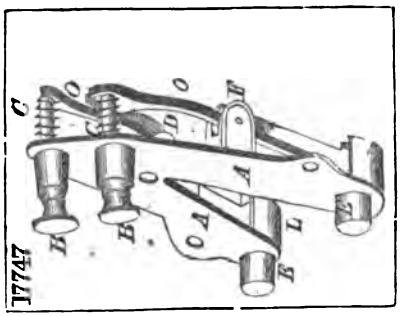

fig.2

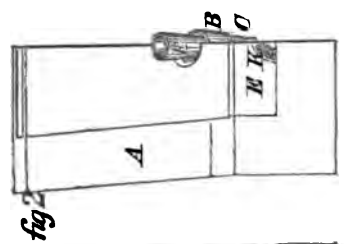

fig.1

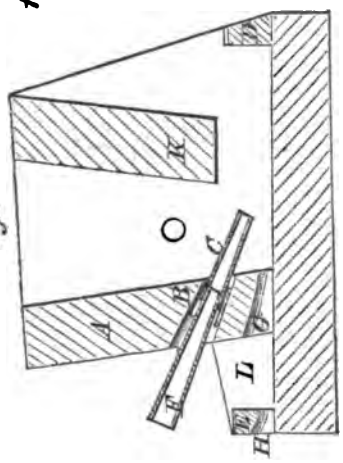

18910

fig.2

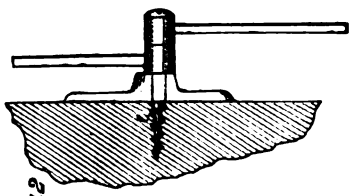

fig.1

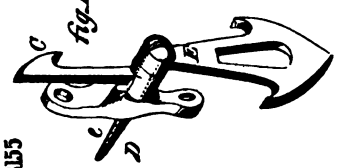

18155

17424.

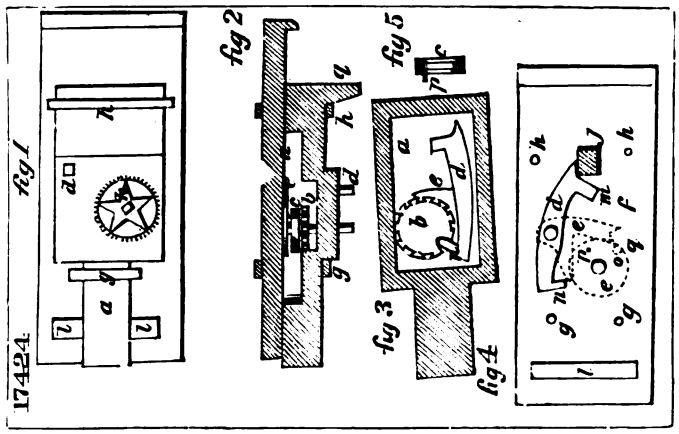

16908

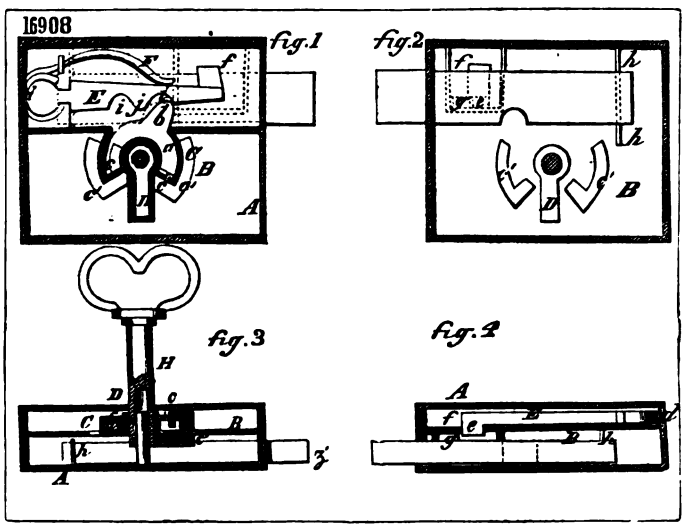

17908

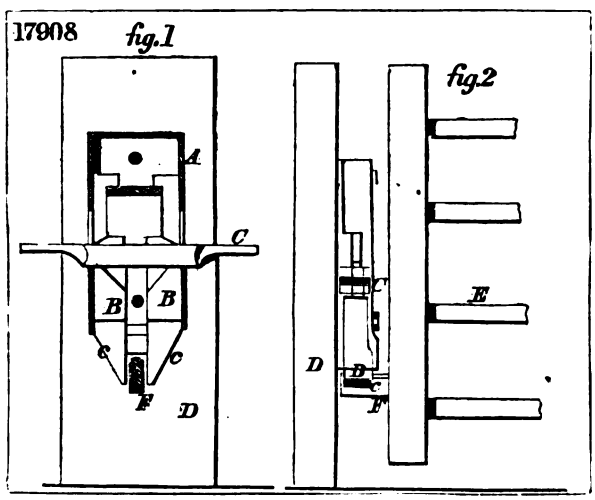

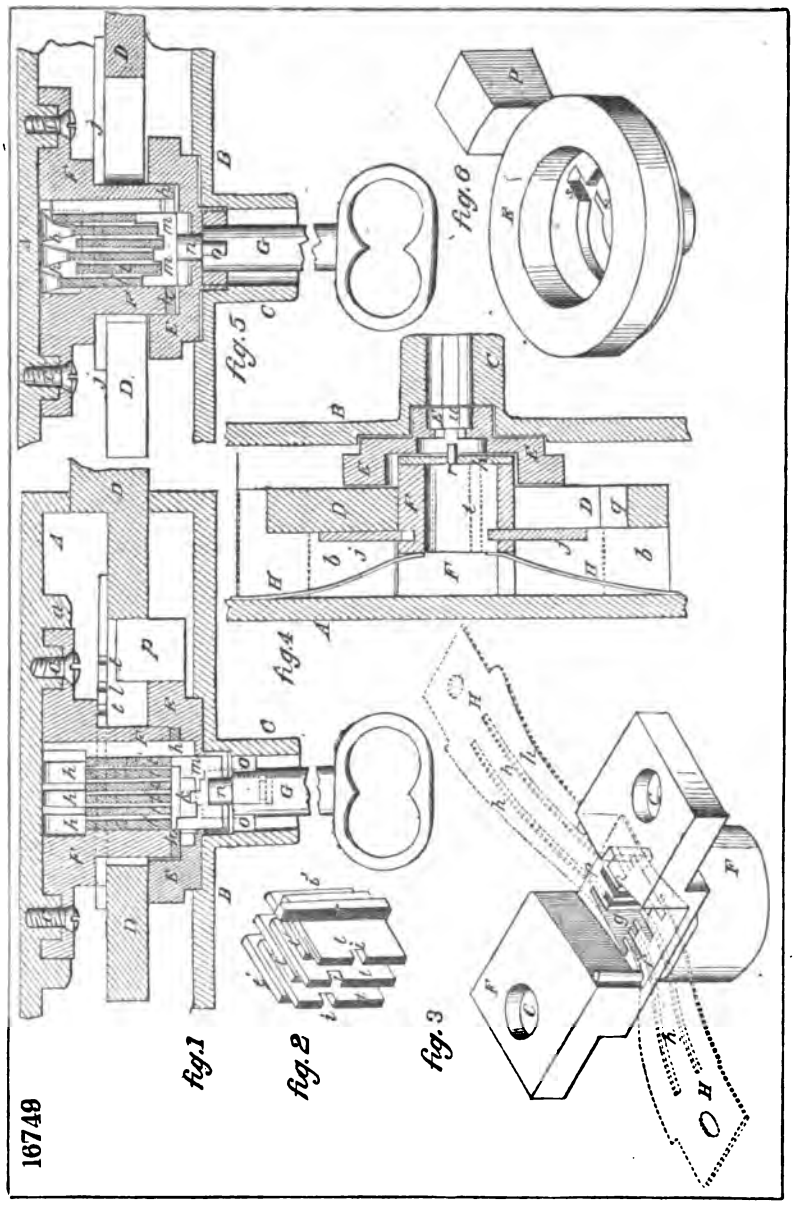
16749
fig.1
fig.2
fig.3
fig.4
fig.5
fig.6

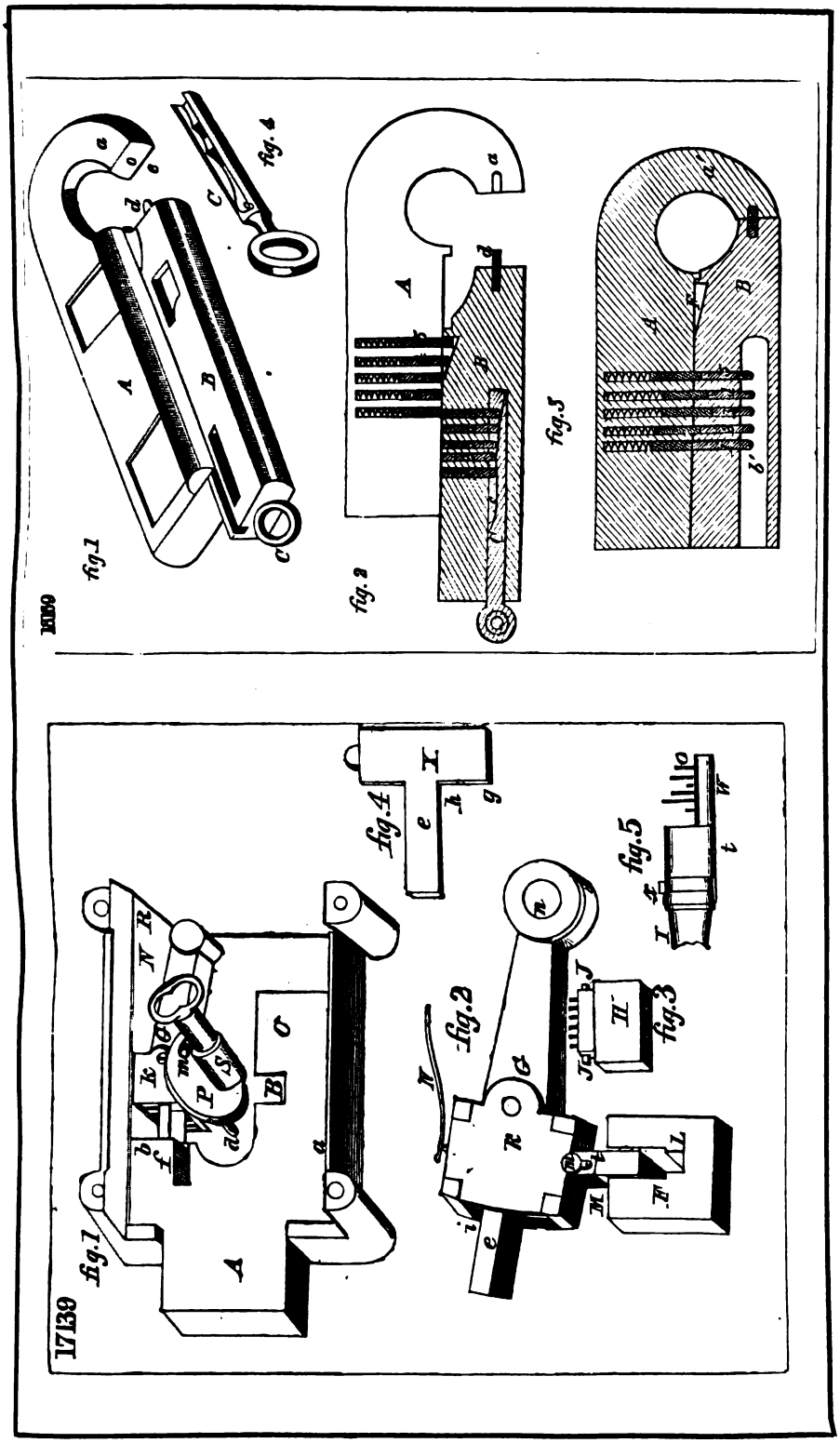
17139
fig.1
fig.2
fig.3
fig.4
fig.5
18169
fig.1
fig.2
fig.3
fig.4
fig.5

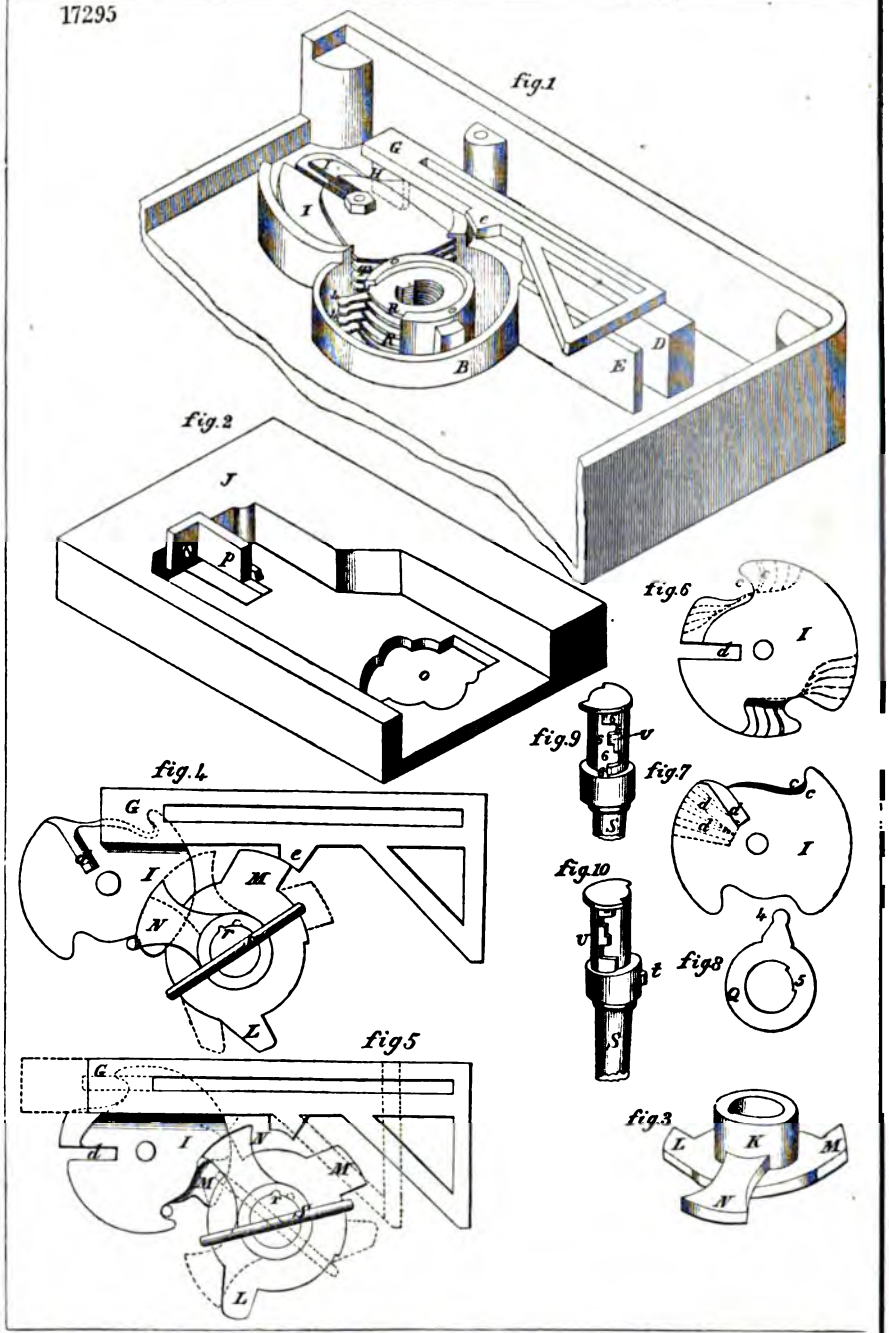
17295
fig.1
fig.2
fig.3
fig.4
fig.5
fig.6
fig.7
fig.8
fig.9
fig.10

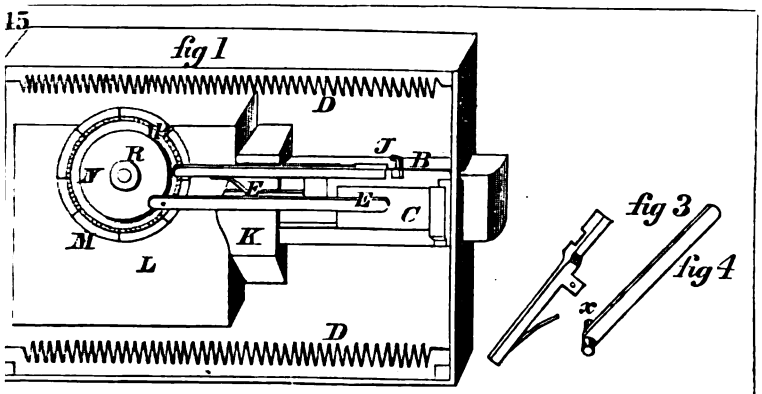
15
fig 1
D
R
J
B
E
C
M
K
L
D

fig 3
fig 4
x

fig 2

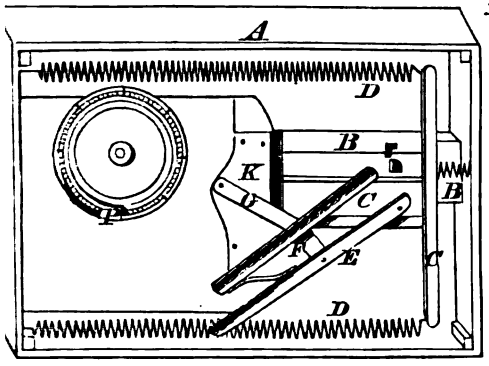
A
D
B
K
C
B
F
E
D

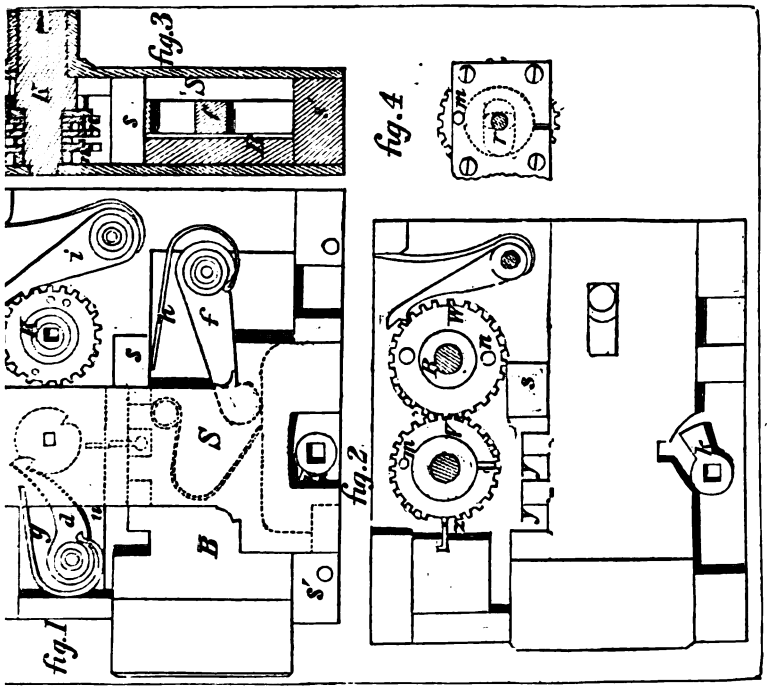
fig.3
fig.4
fig.2
fig.1
S
B

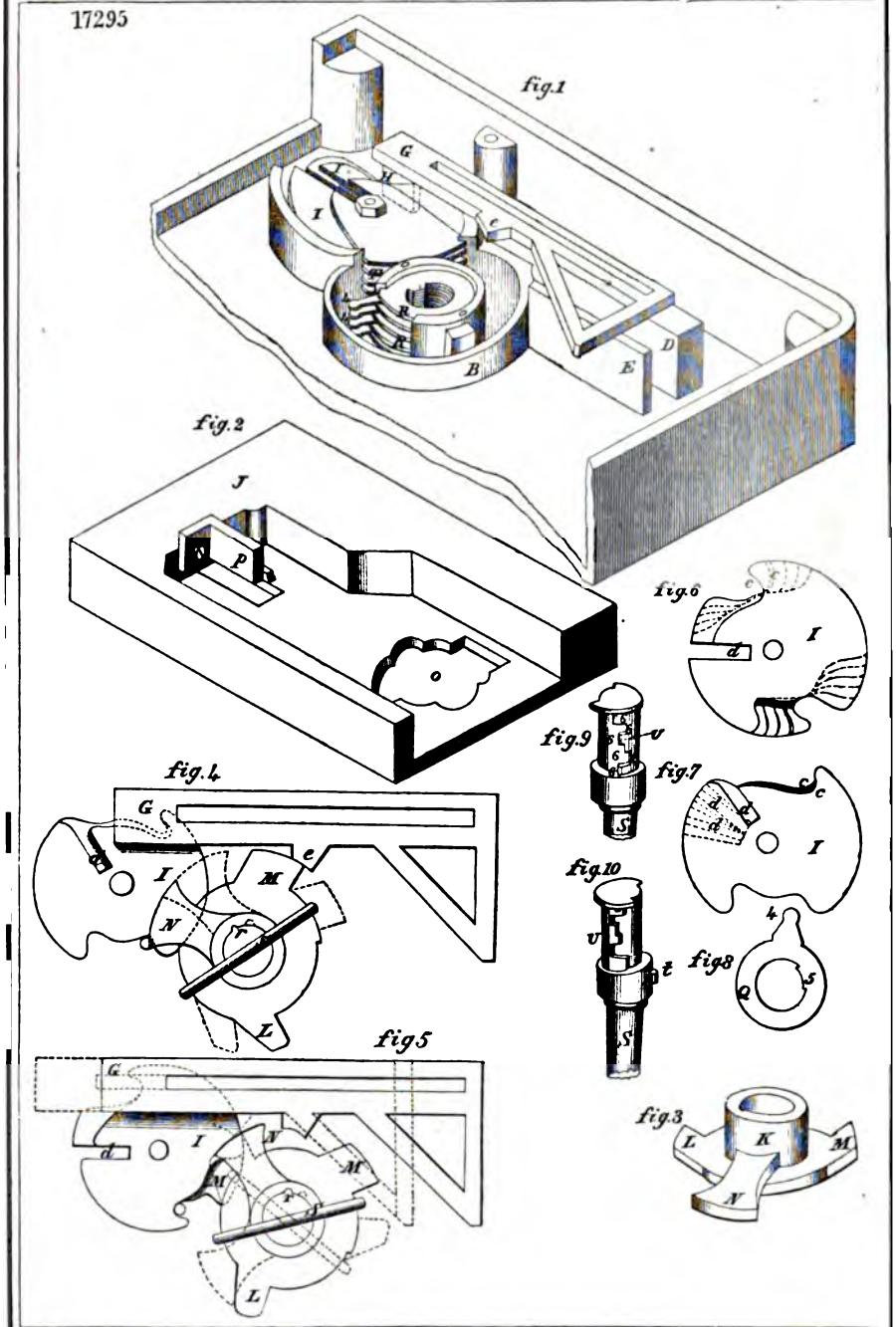
17295
fig.1
fig.2
fig.3
fig.4
fig5
fig.6
fig.7
fig.8
fig.9
fig.10

7245

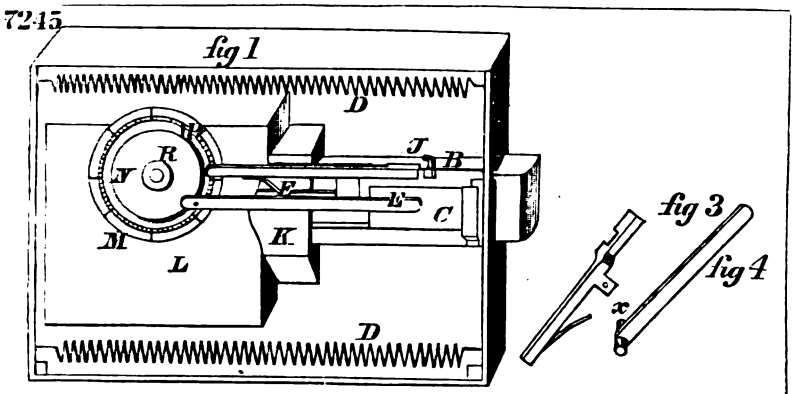
fig 1
D
J
B
R
F
E
C
K
M
L
D

fig 3
fig 4
x

fig 2

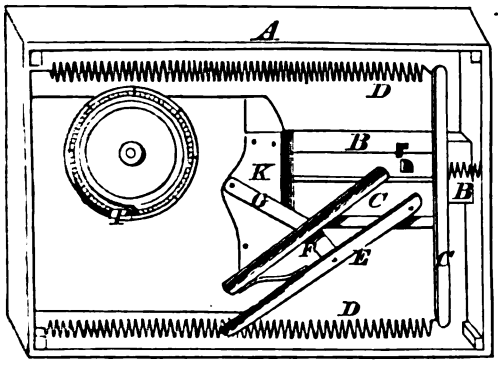
A
D
B
K
C
F
E
D

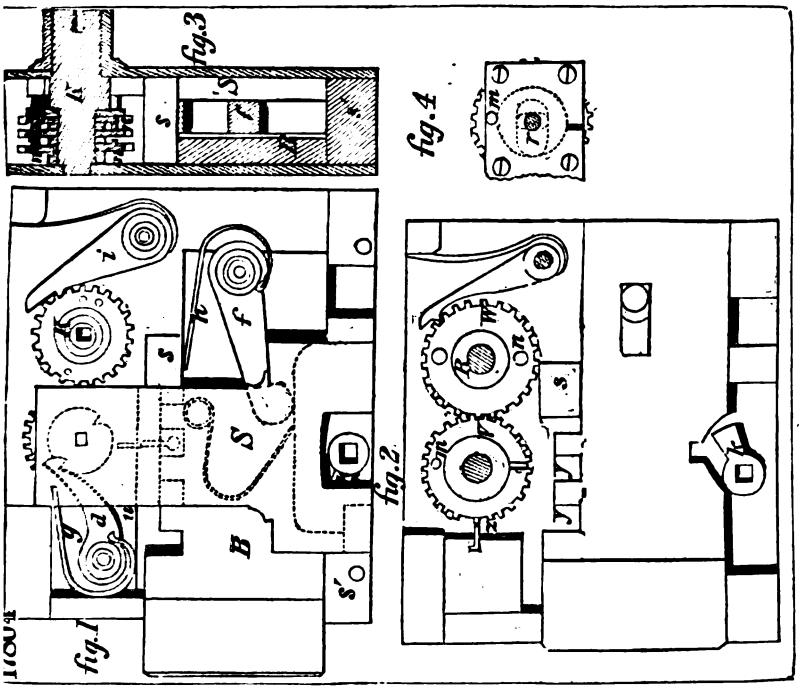
fig.3
fig.4
fig.2
fig.1
S
B

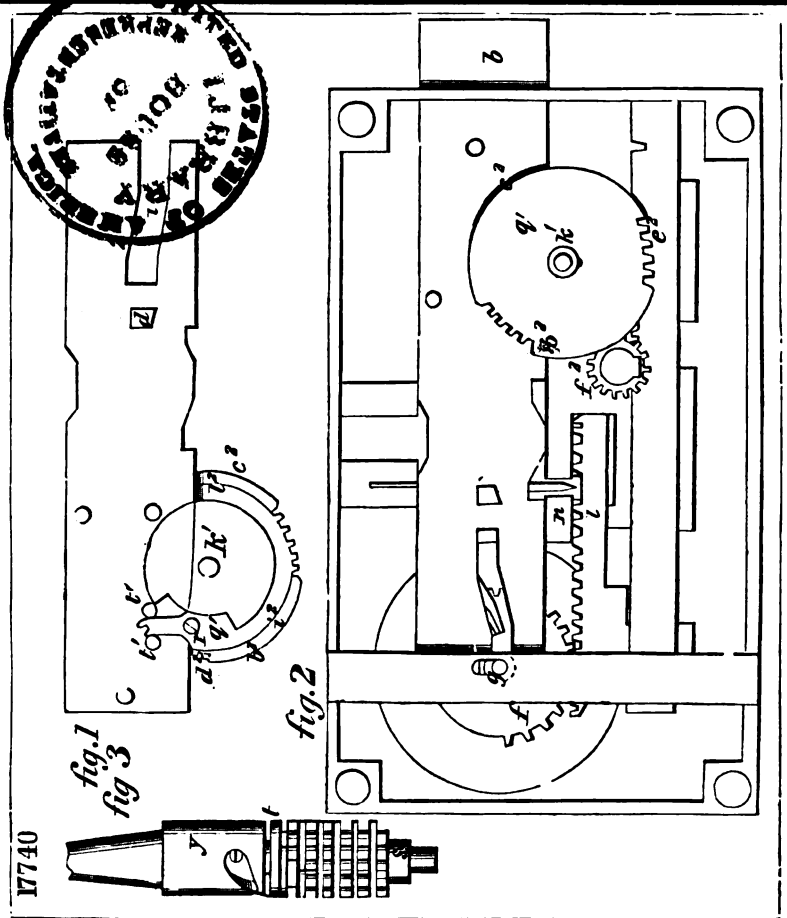
17740
fig.1
fig 3
fig.2

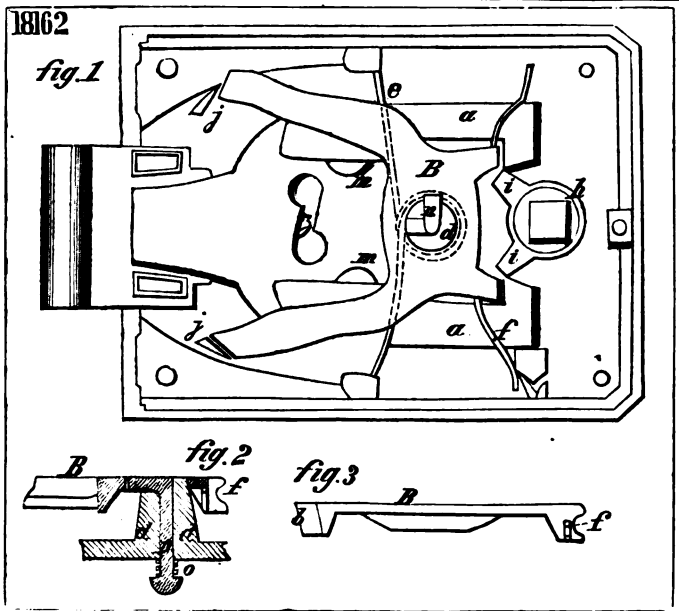
18162
fig.1
fig.2
fig.3

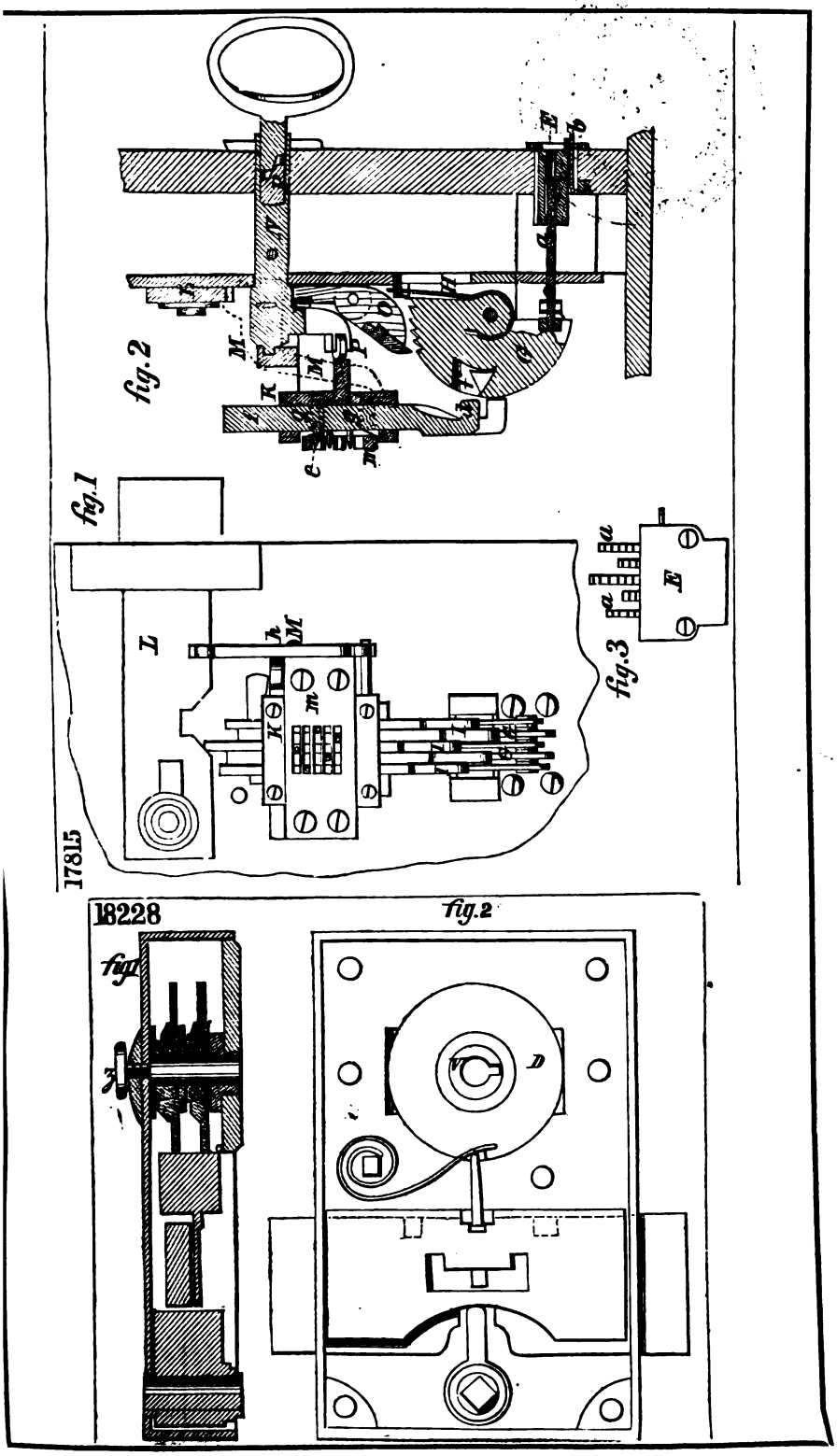
fig. 2
fig. 1
fig. 3
17815
18228
fig. 2

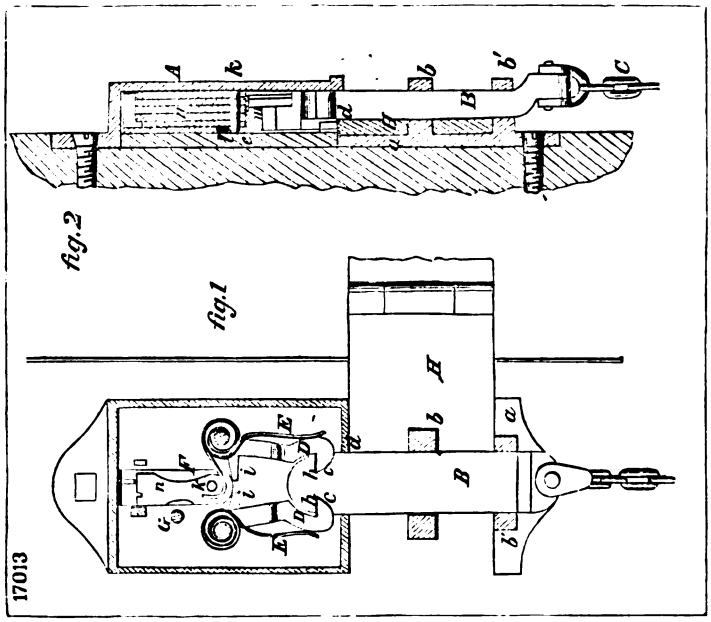
17013
fig.2
fig.1

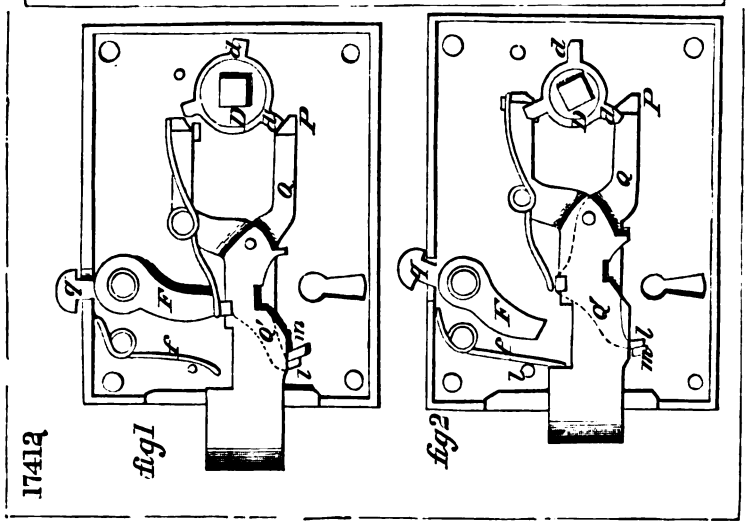
17412
fig1
fig2

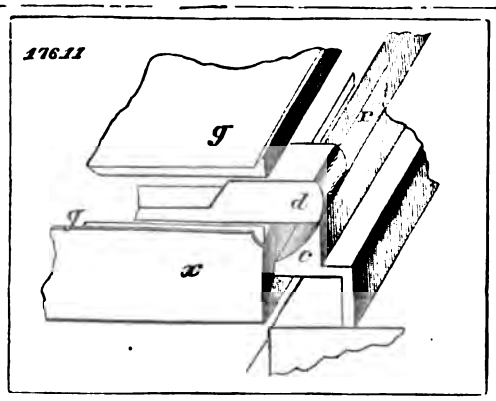
17611

18243

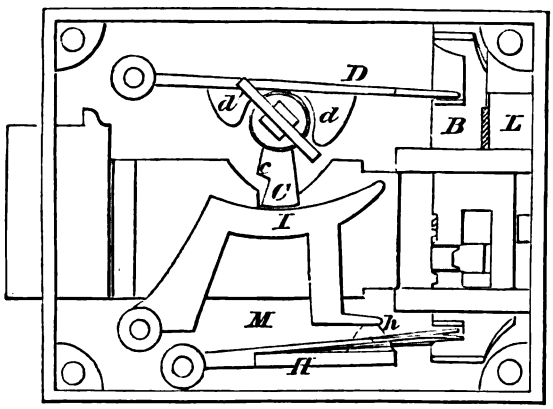

ad18243

fig 2

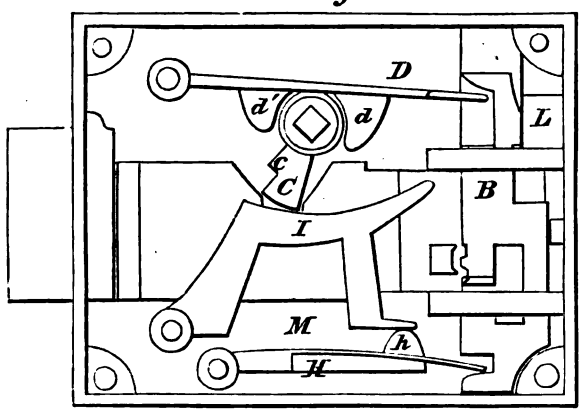

16676

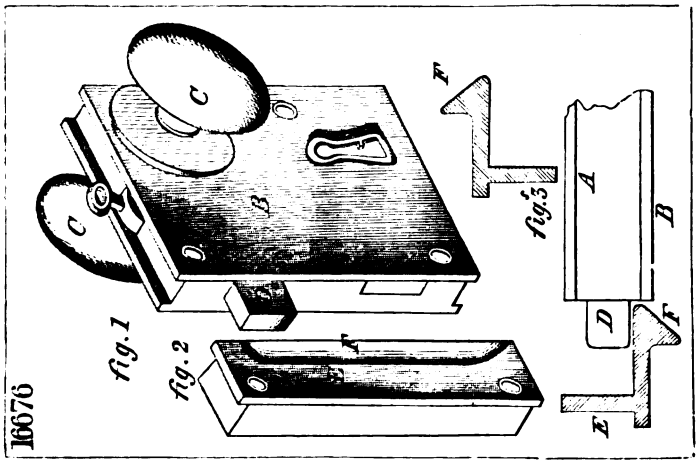

18372

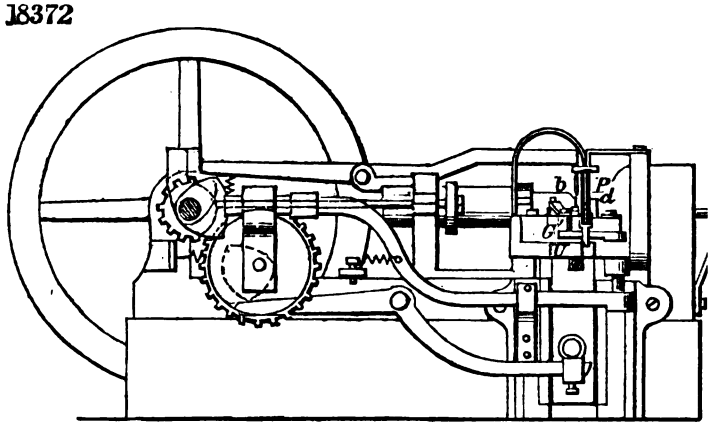

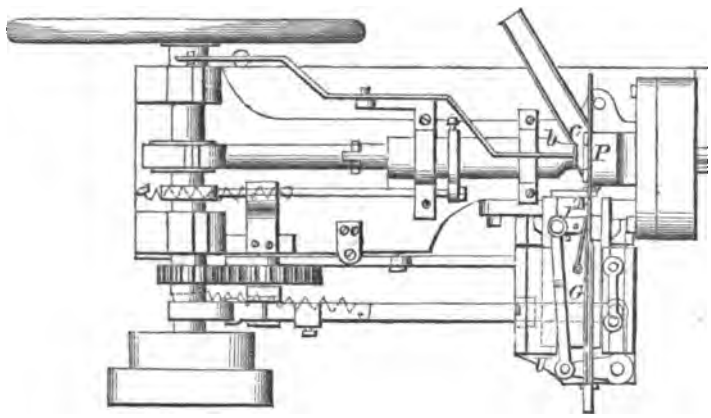

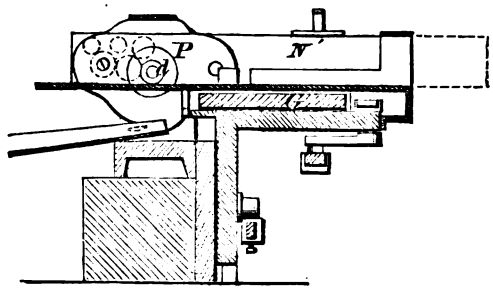

17813

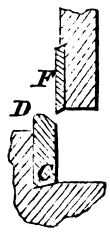

10456

fig.1

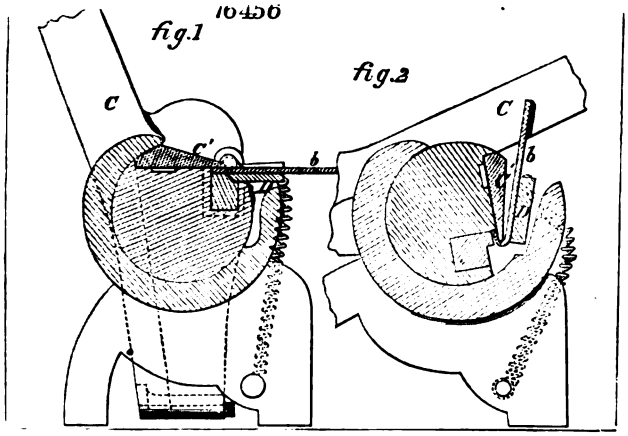

fig.2

17714

fig1

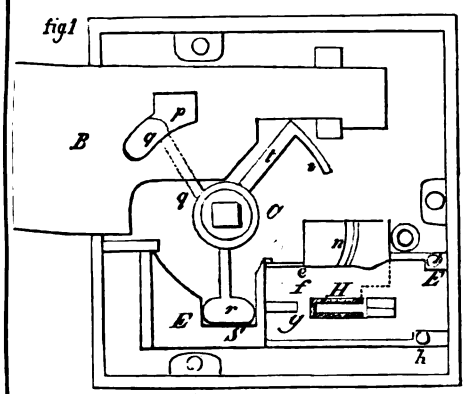

fig.2

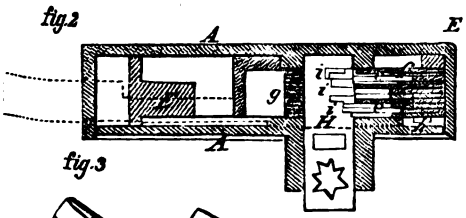

fig.3

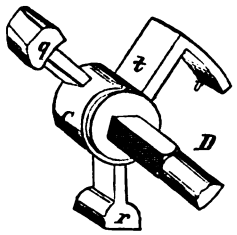

fig.4

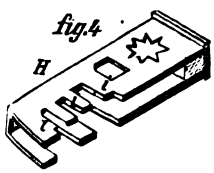

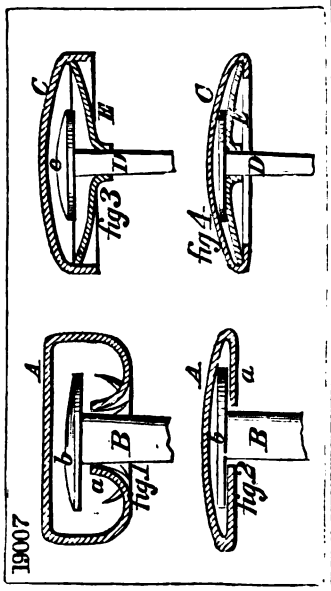

1907

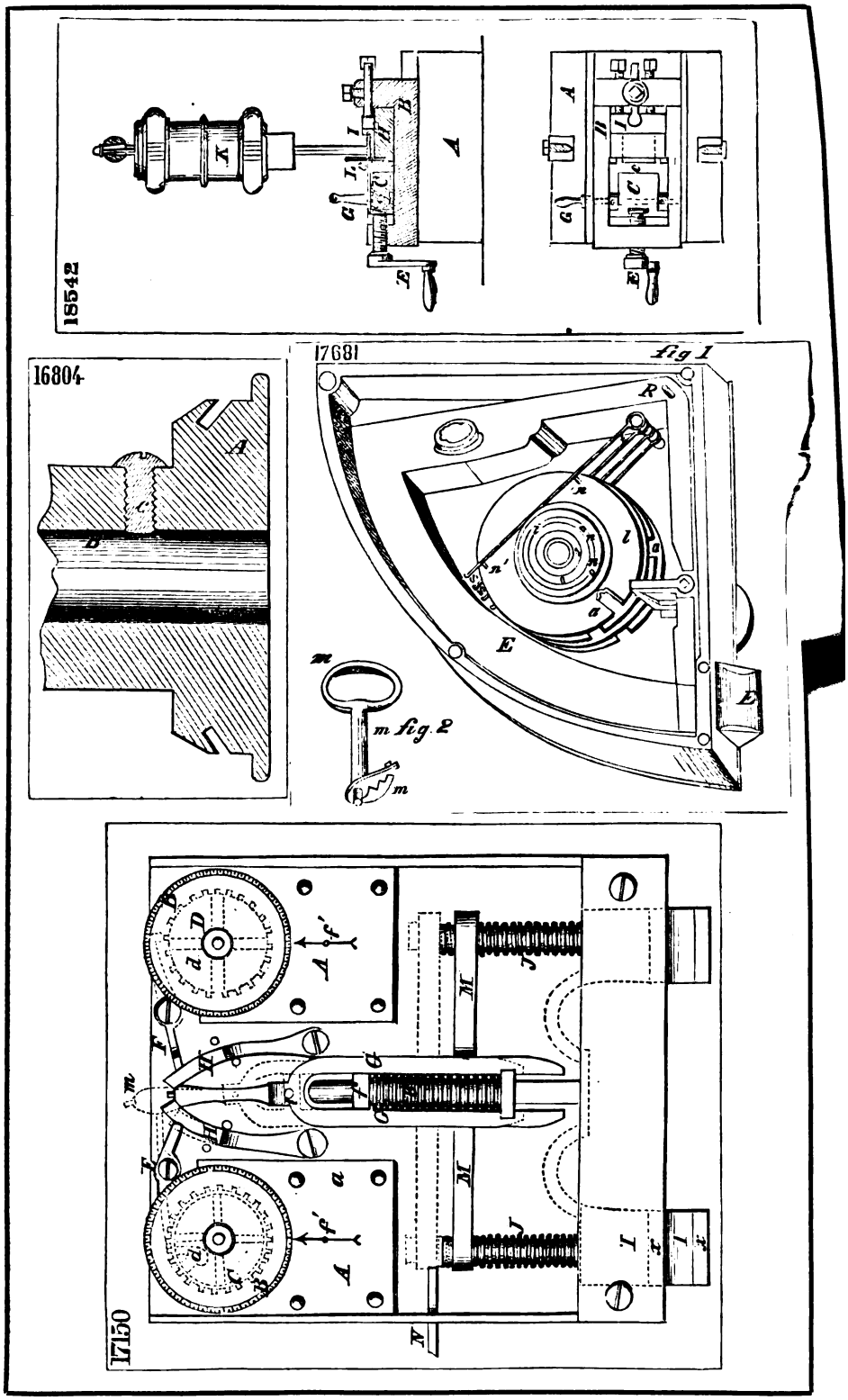
18542
16804
17681
fig 1
fig 2
17150

17364

fig.2

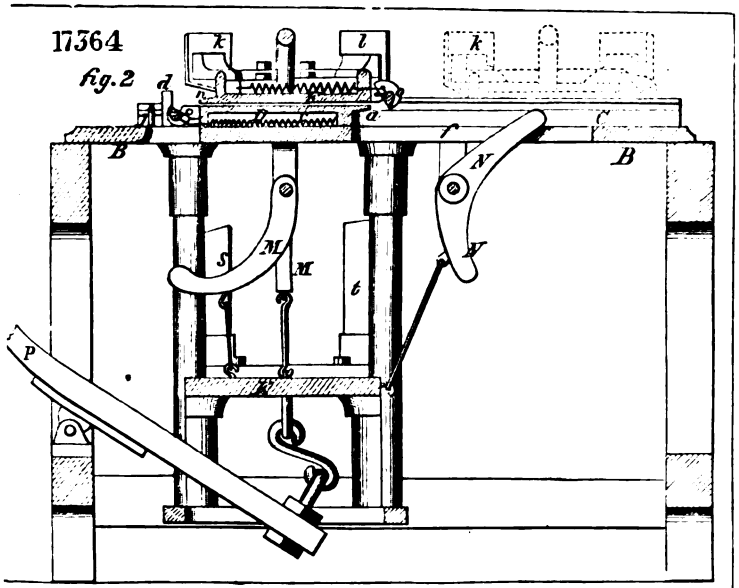

fig.1

fig.3

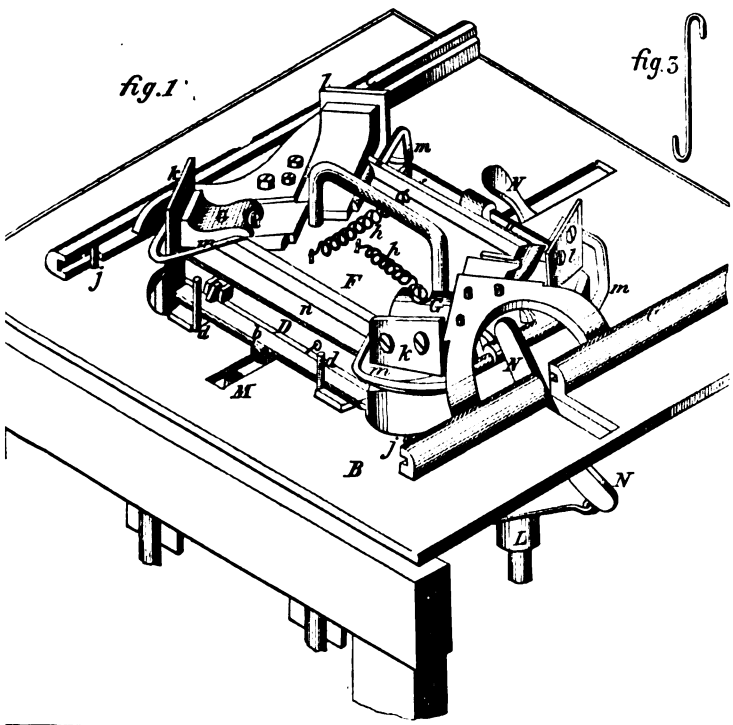

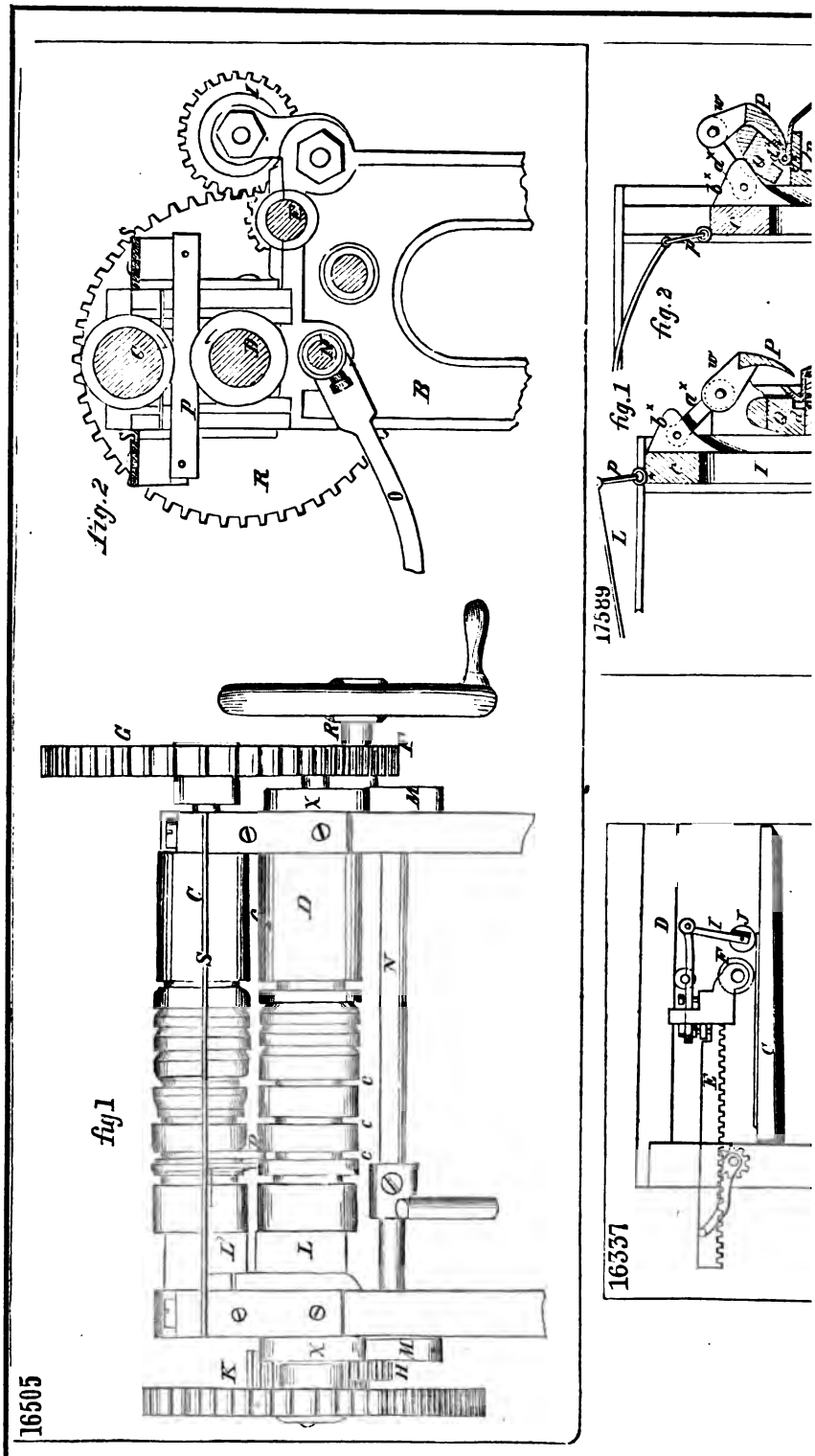
16505
fig.1
fig.2
17589
fig.1
fig.2
16337

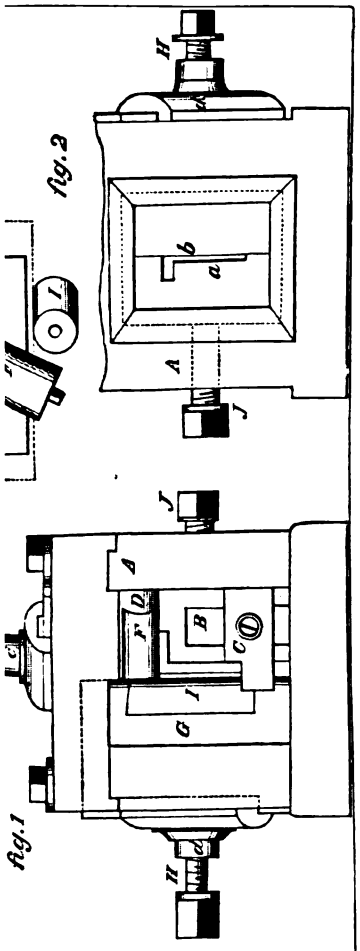

17721.

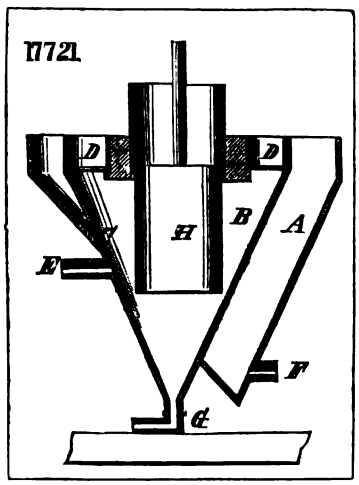

17778

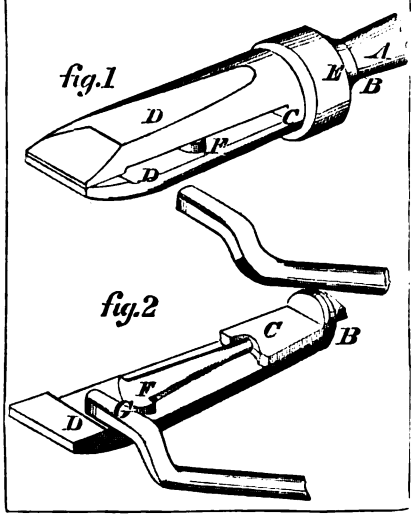

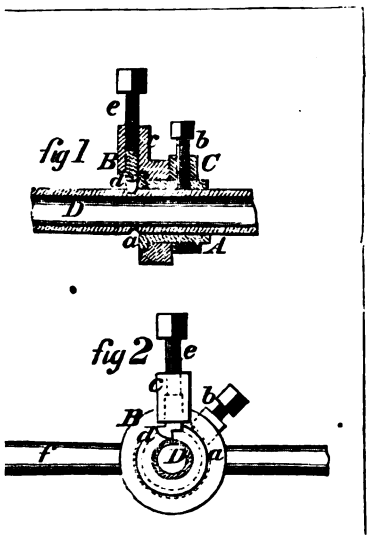

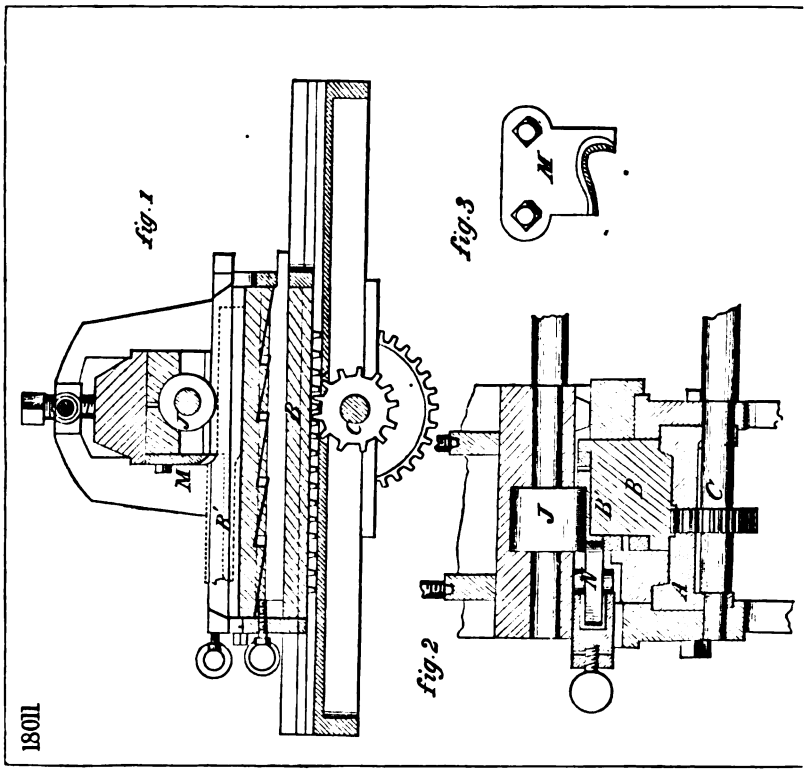
18011
fig.1
fig.2
fig.3
M
B
C
J
A
N

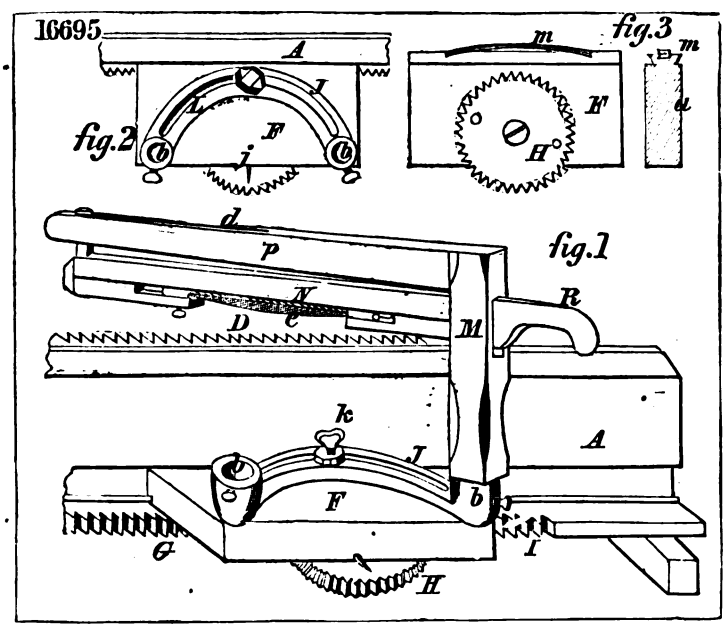
16695
fig.1
fig.2
fig.3
A
J
F
L
j
b
m
H
d
p
N
e
D
M
R
k
G
I

16481

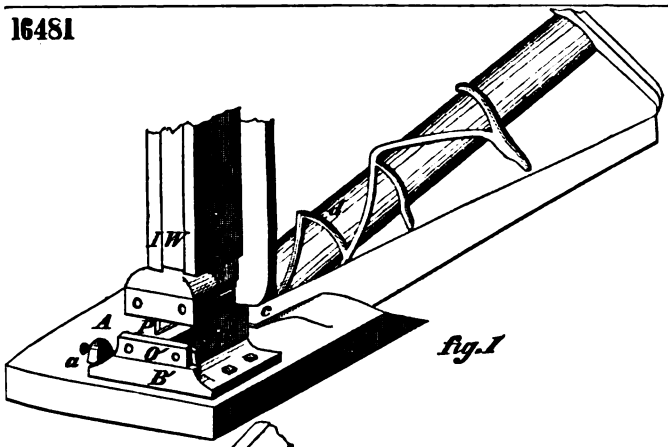

fig.1

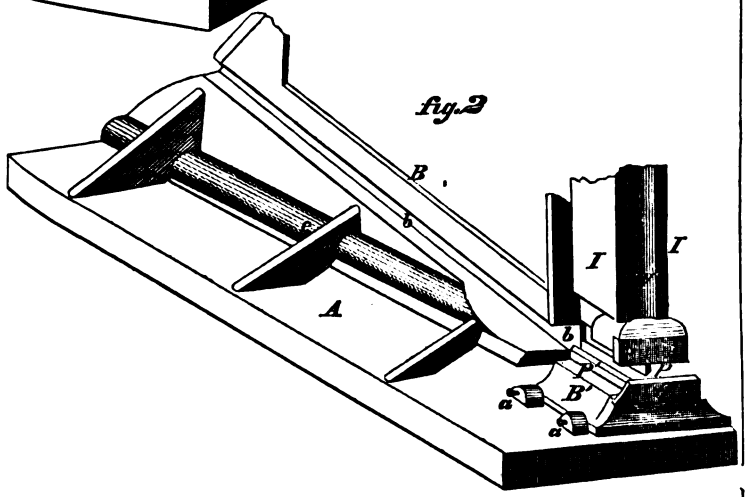

fig.2

18130

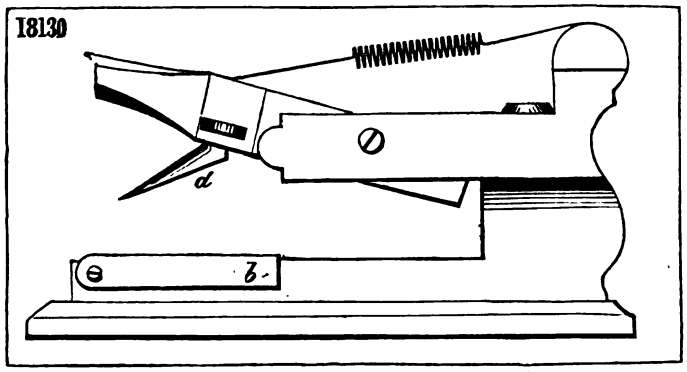

16853

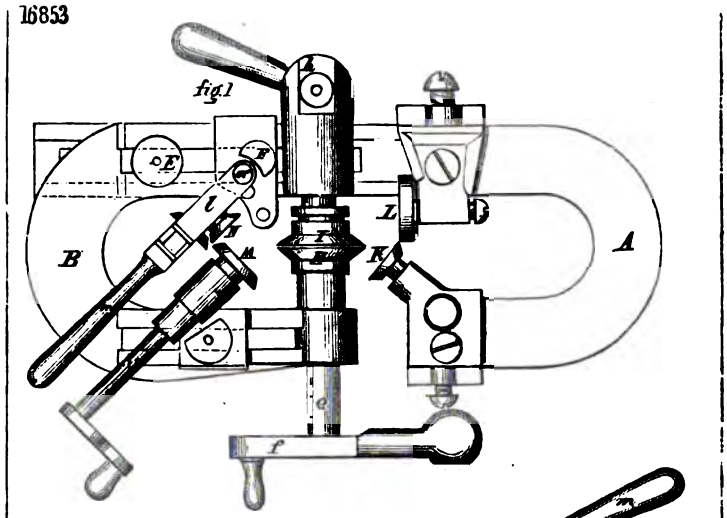

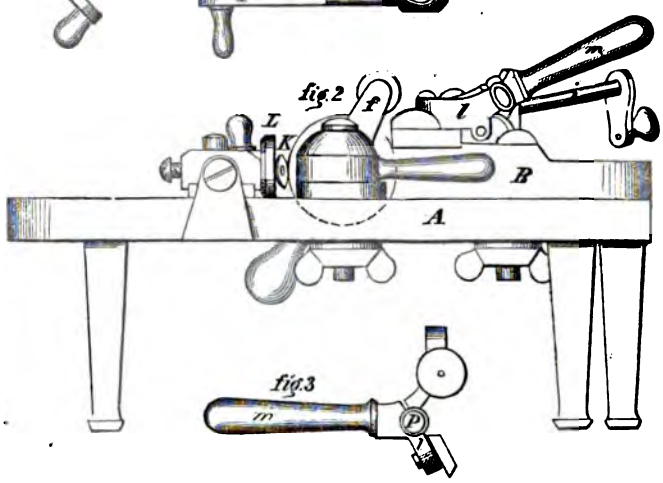

17197

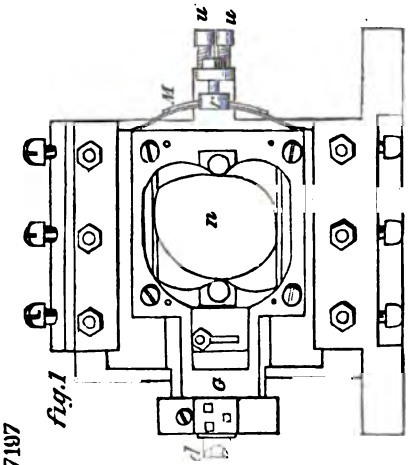

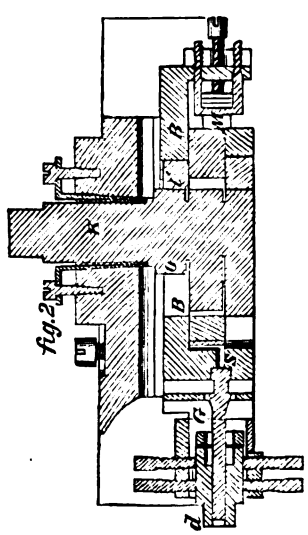

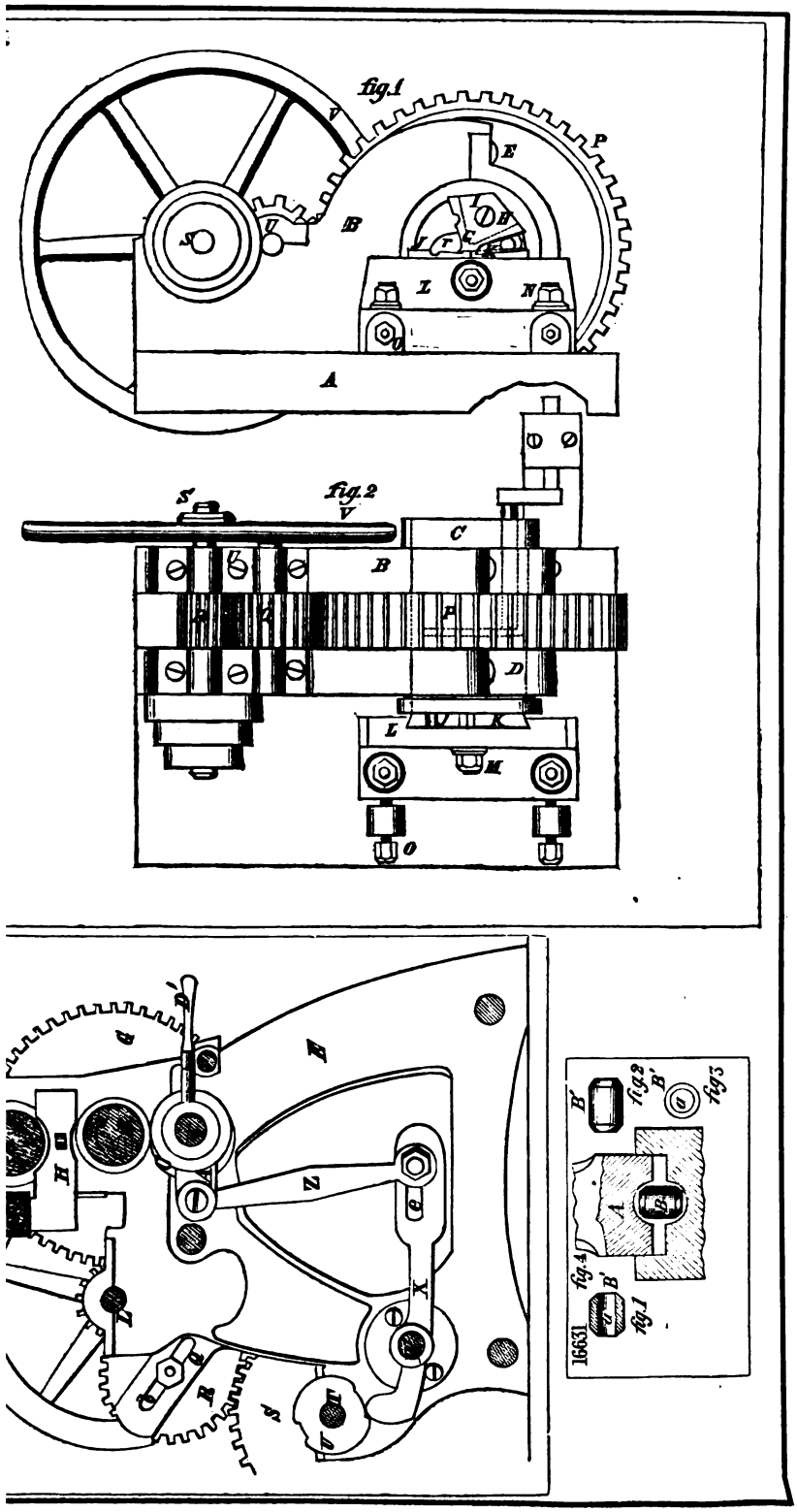
fig.1
fig.2
fig.3
fig.4
16631

17876

fig. 1

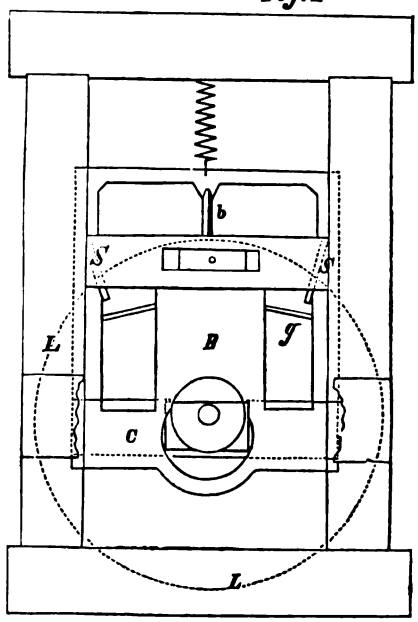

fig. 2

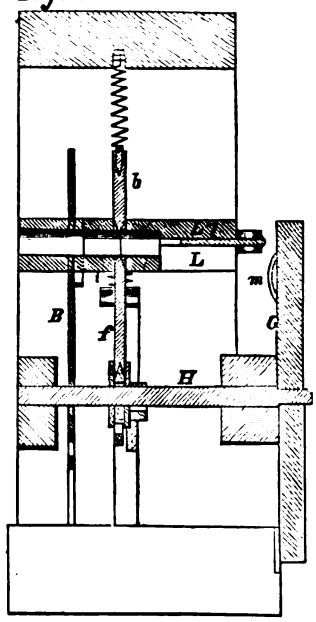

fig. 3

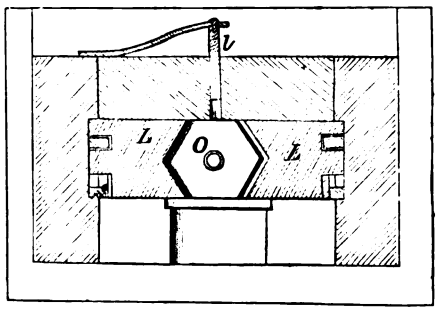

18457

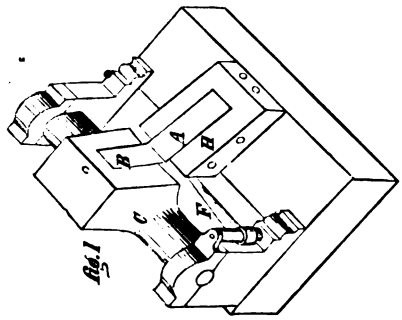

fig. 1

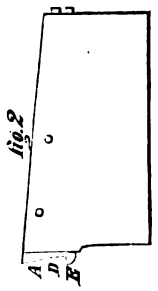

fig. 2

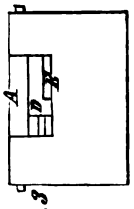

fig. 3

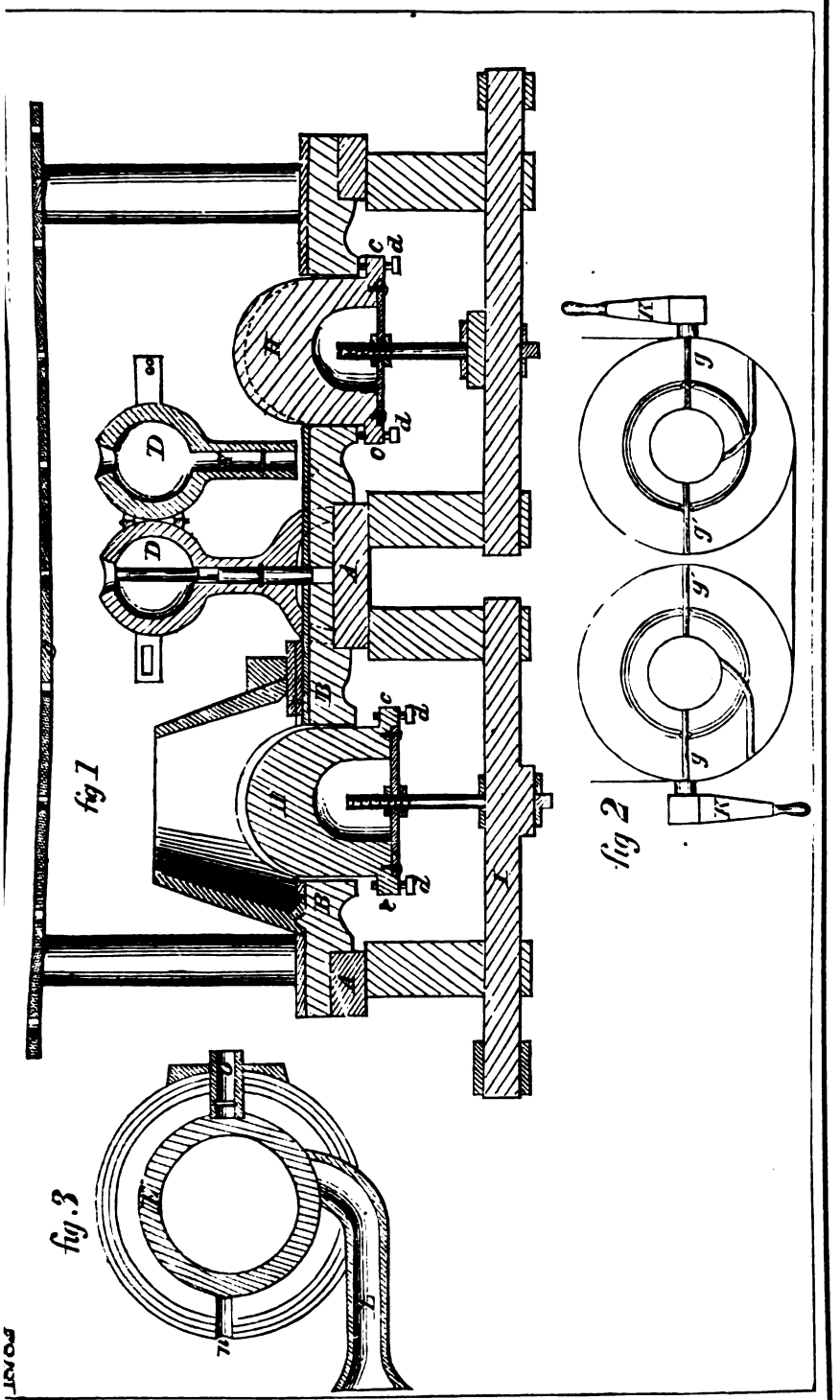
fig 1
fig 2
fig 3

B617

fig.1

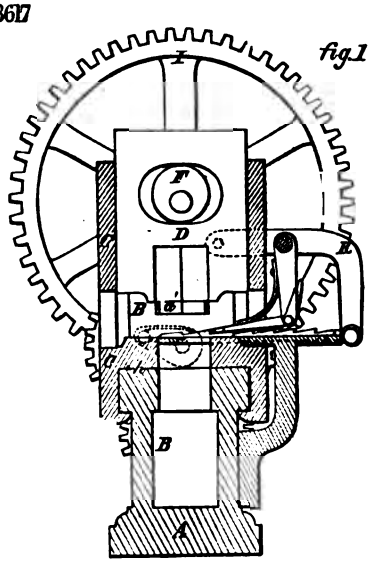

fig.3 fig.4

fig. 2

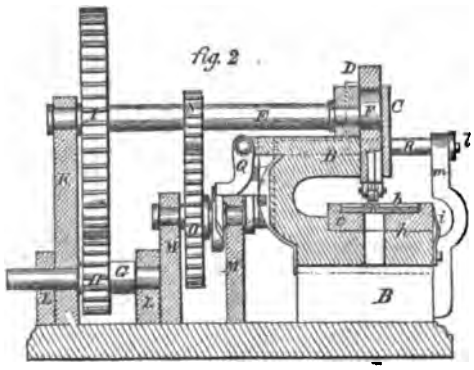

17374

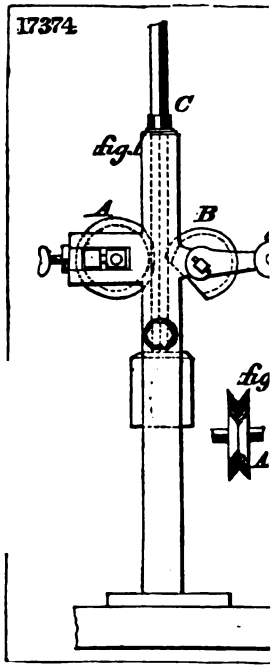

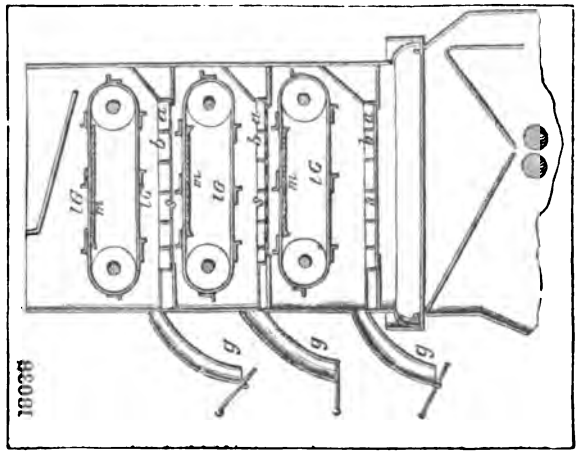

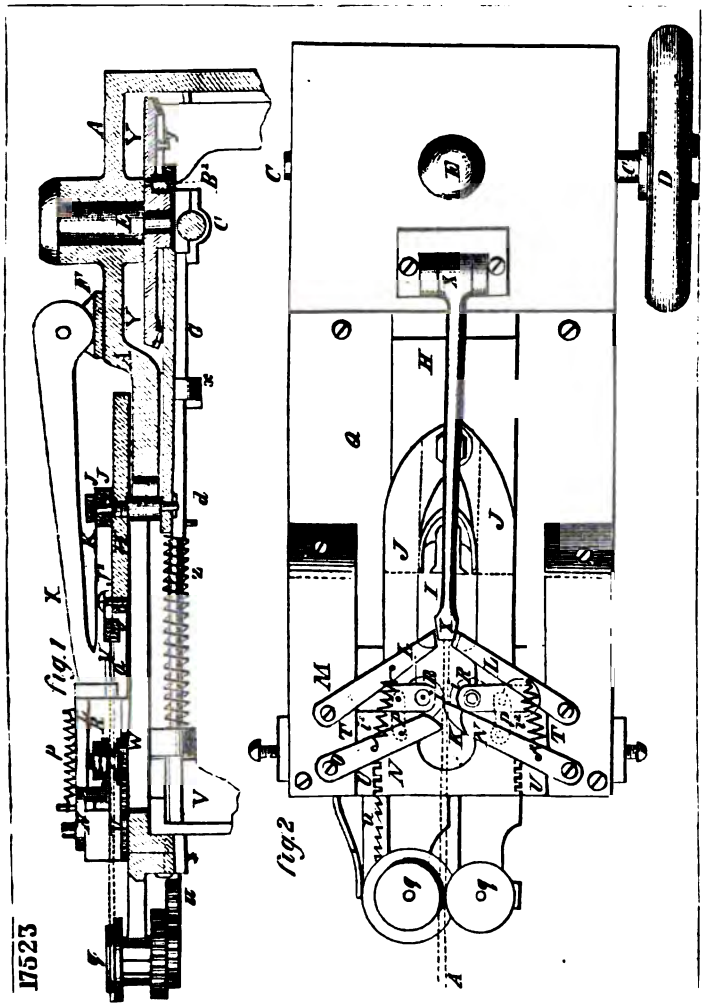
17523
fig.1
fig.2

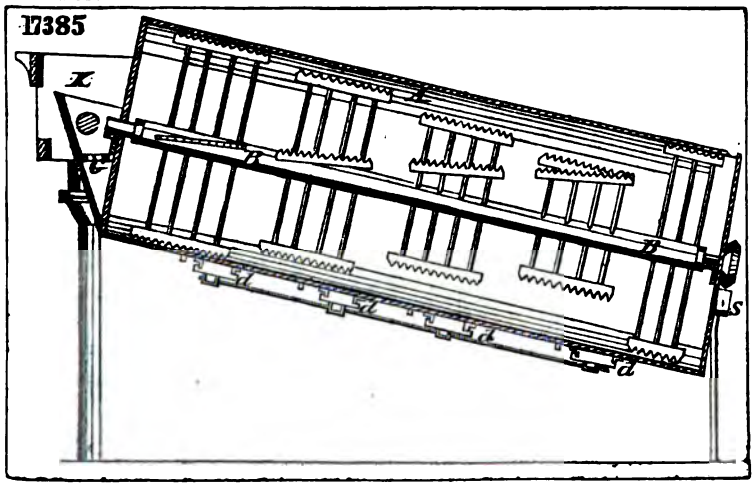
17385

17941

fig. 1

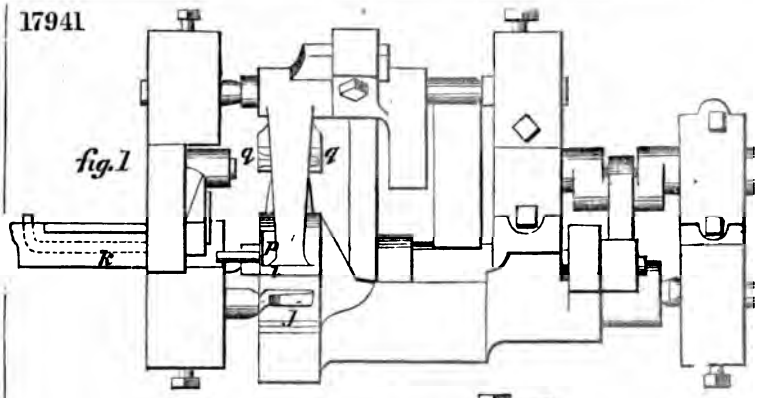

fig. 2

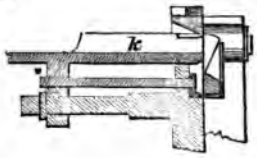

fig. 3

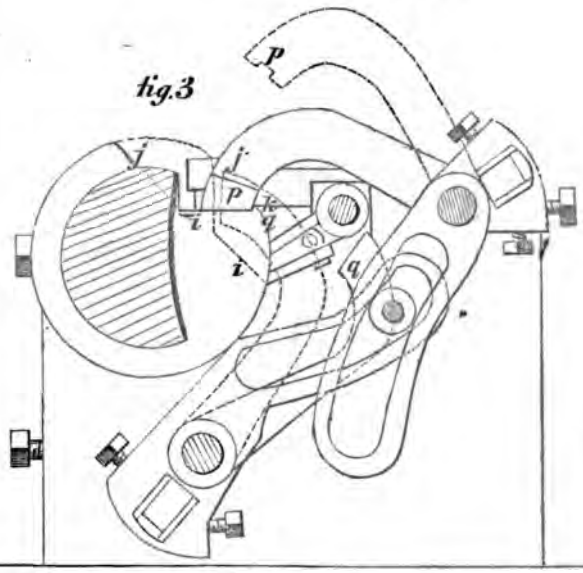

17734

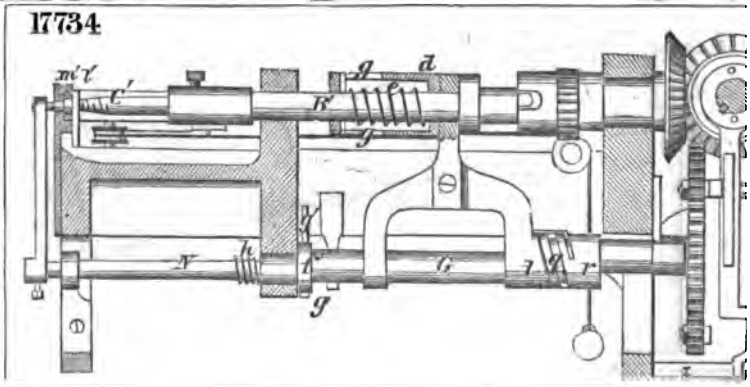

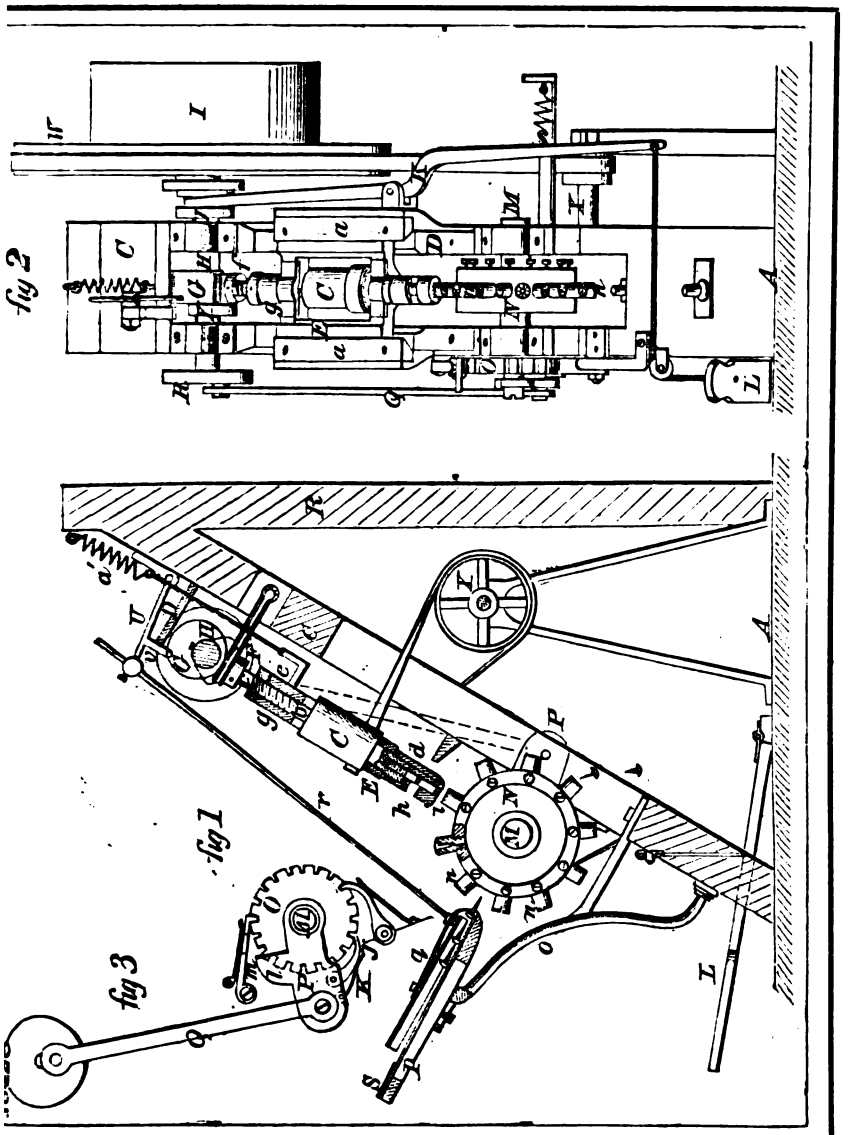
fig 2
fig 1
fig 3

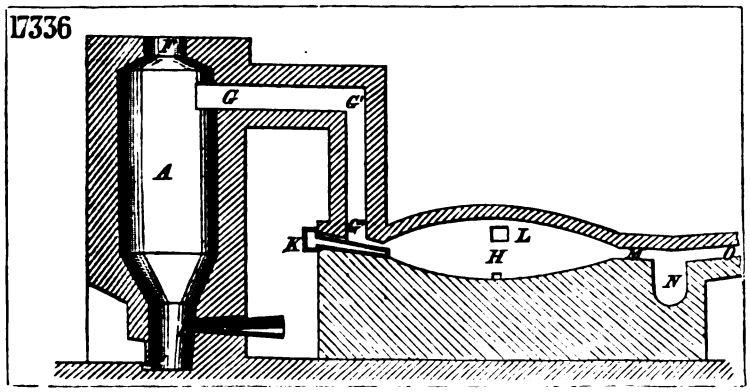
17336

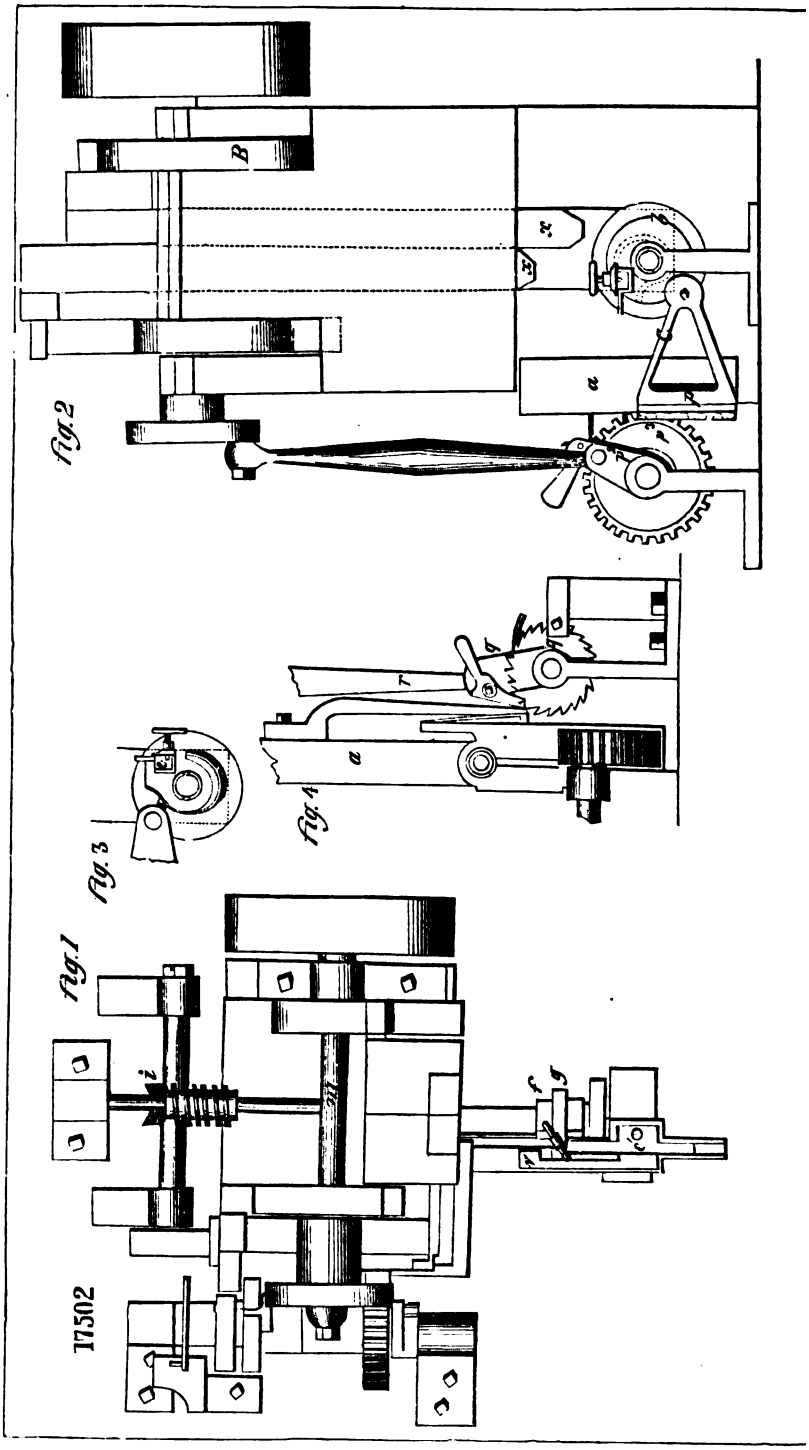
B
x
x
a
fig. 2
a
fig. 4
fig. 3
fig. 1
i
f
g
17502

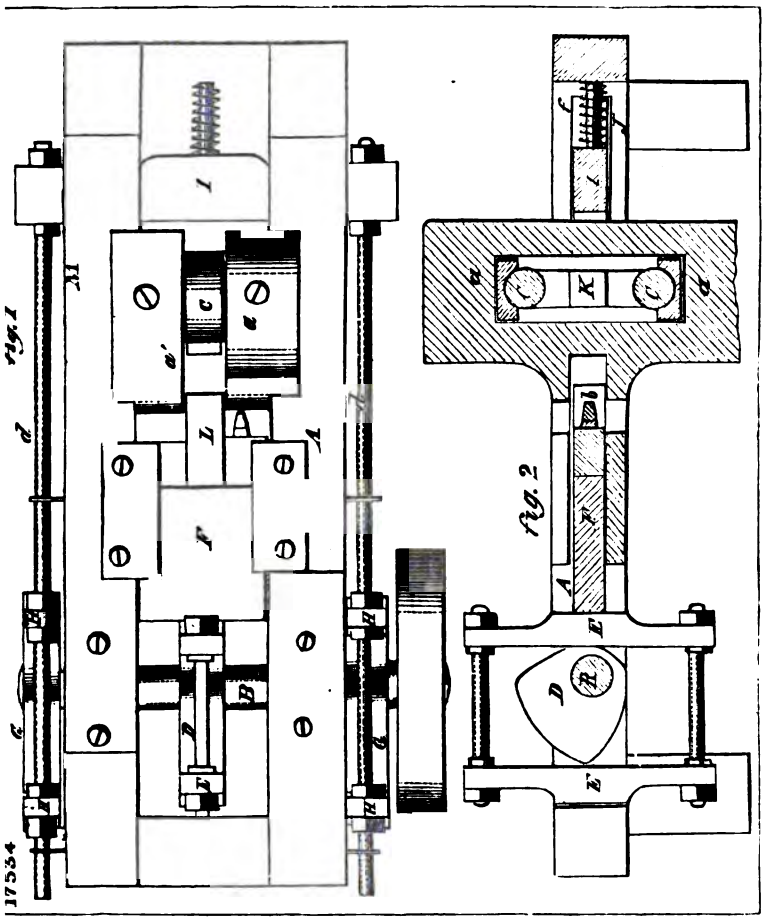
17534
fig. 1
fig. 2

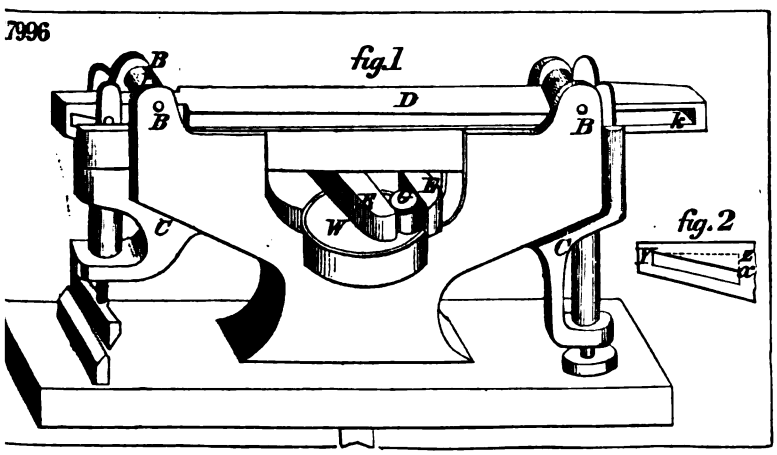
7996
fig. 1
fig. 2

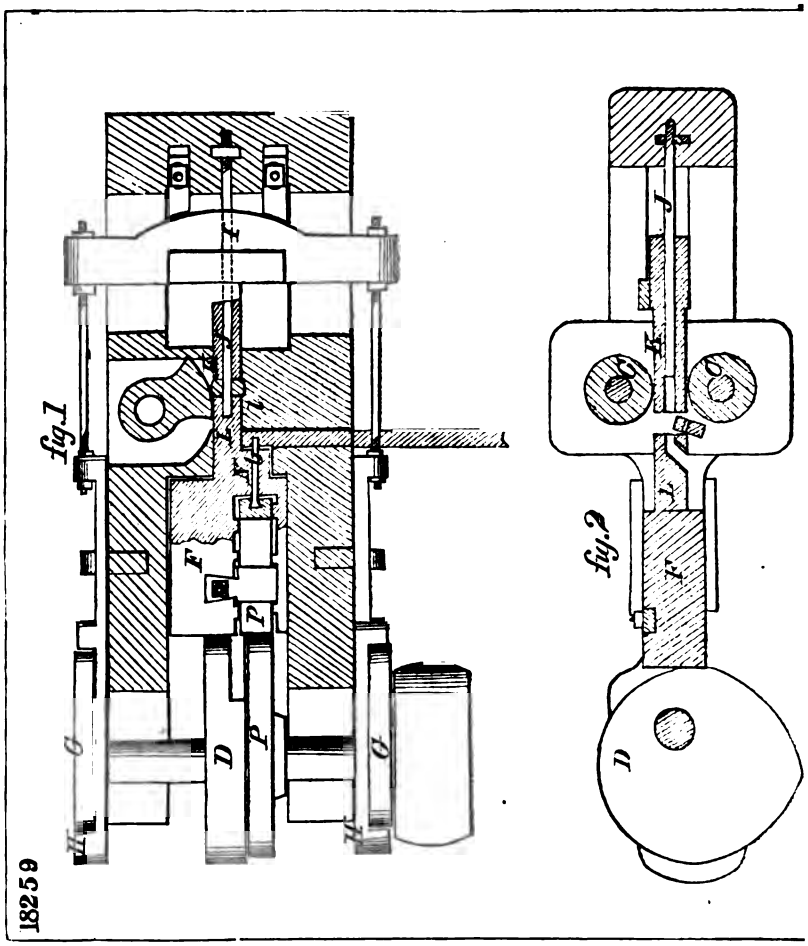
fig.1
fig.2
18259

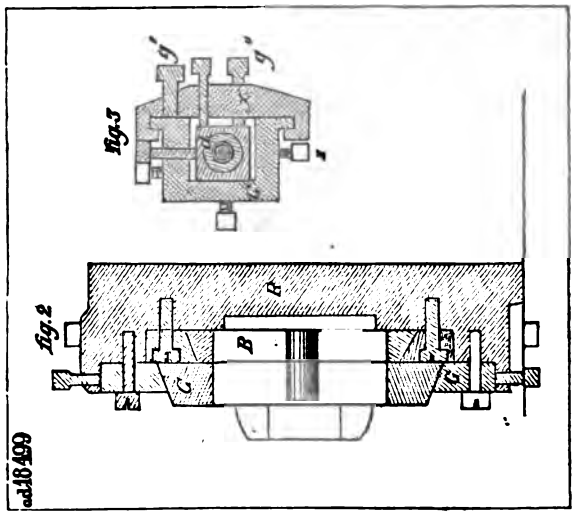
fig.3
fig.2
ad18499

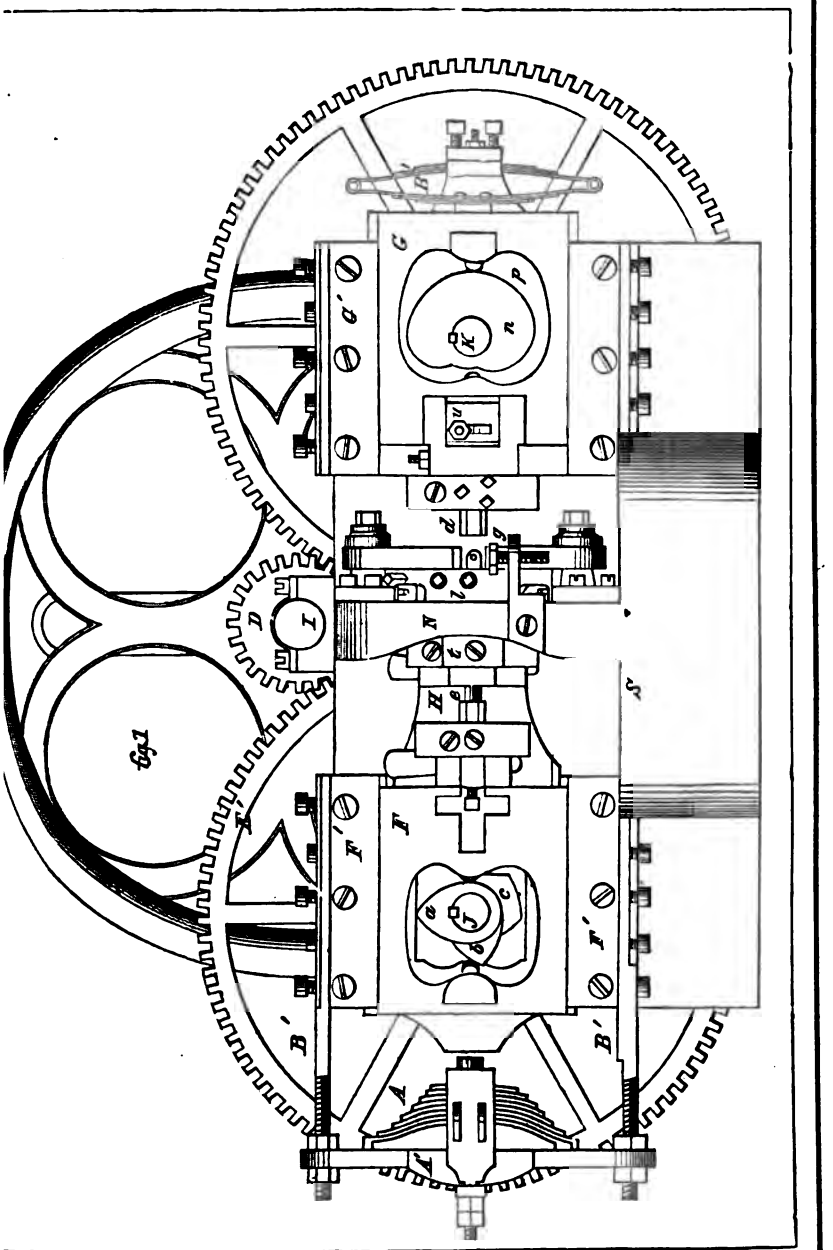
fig. 1

17273

fig. 1

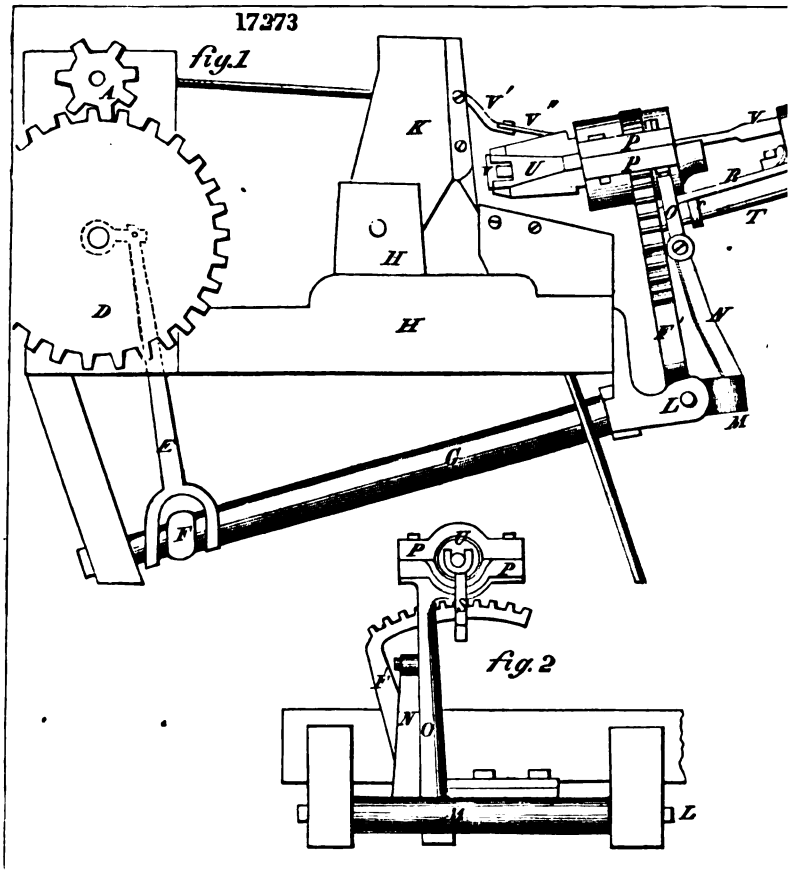

18224

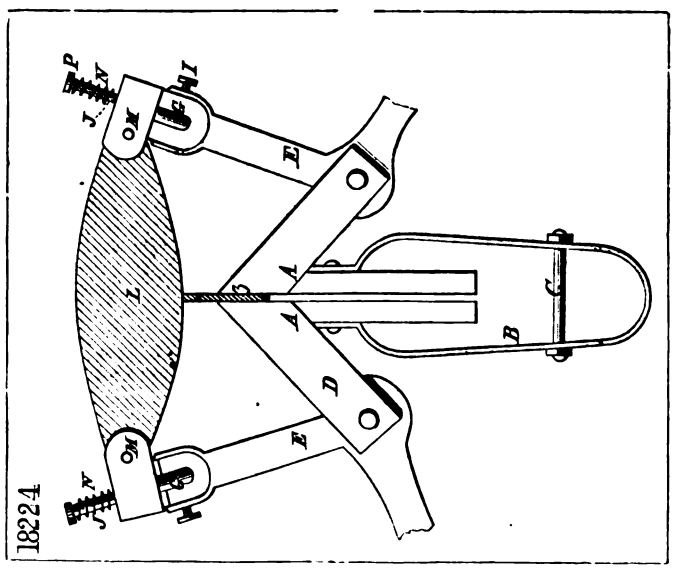

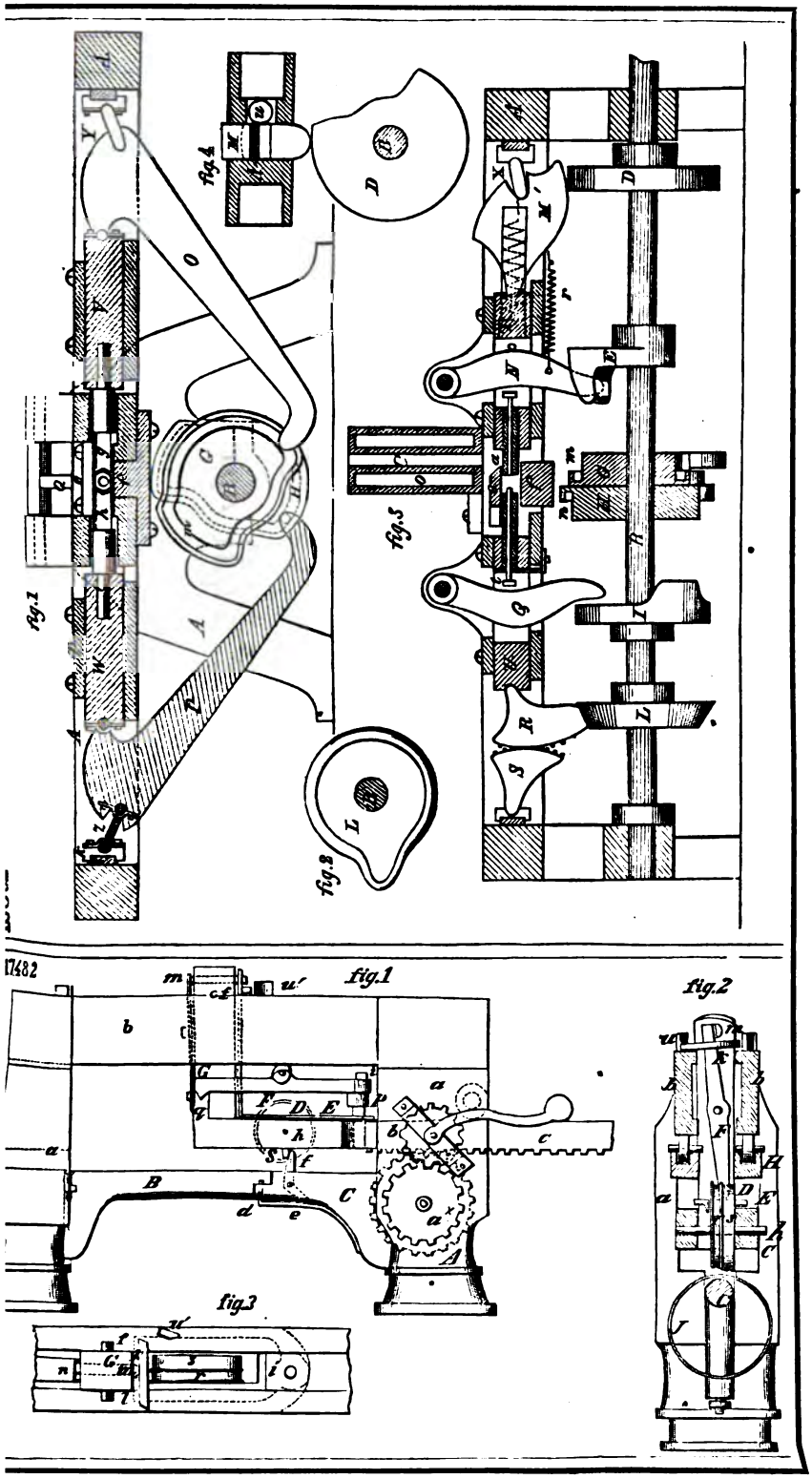
fig.1
fig.4
fig.5
fig.6
17482
fig.1
fig.2
fig.3

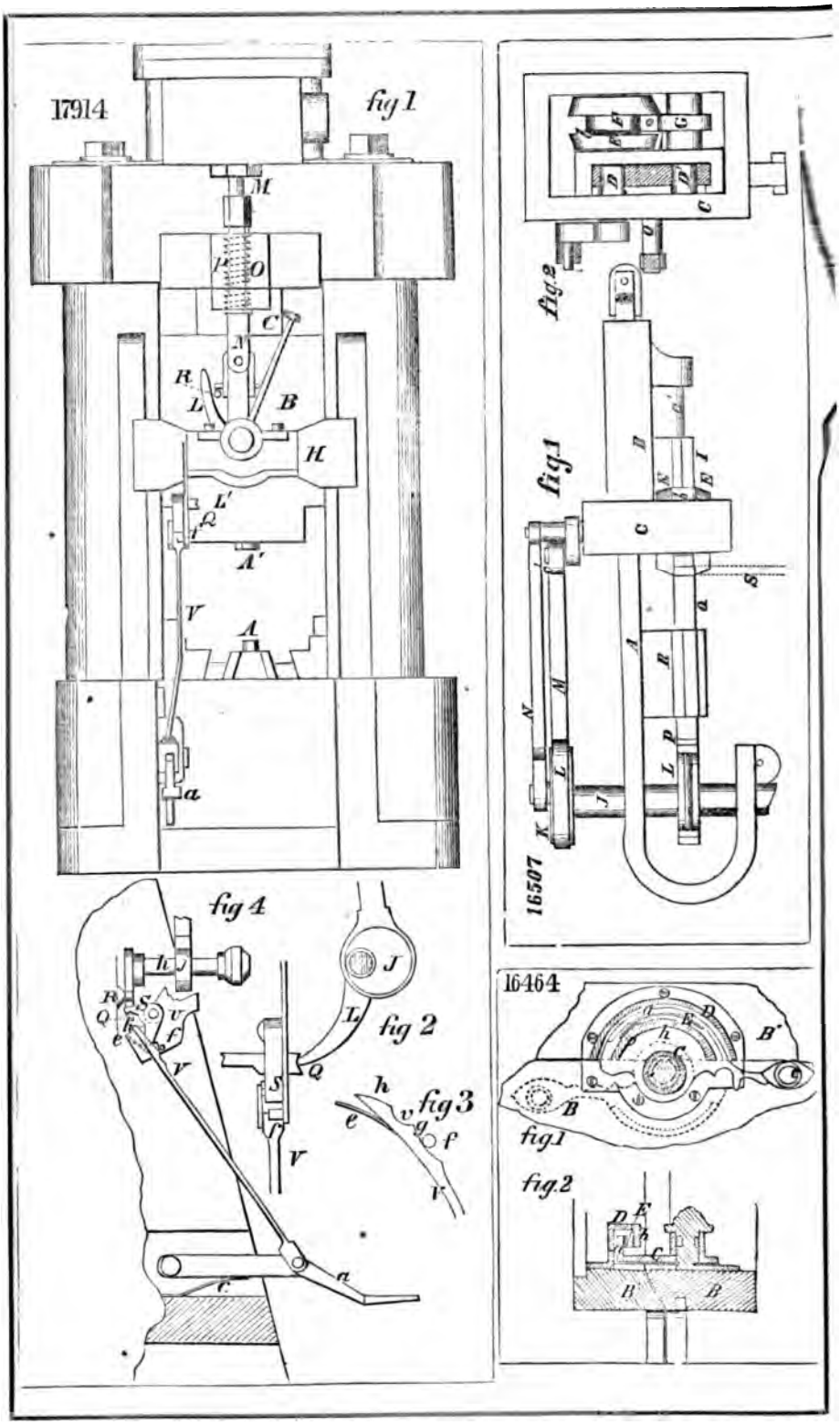
17914
fig 1
fig 2
fig 3
fig 4
16507
16464
fig.1
fig.2

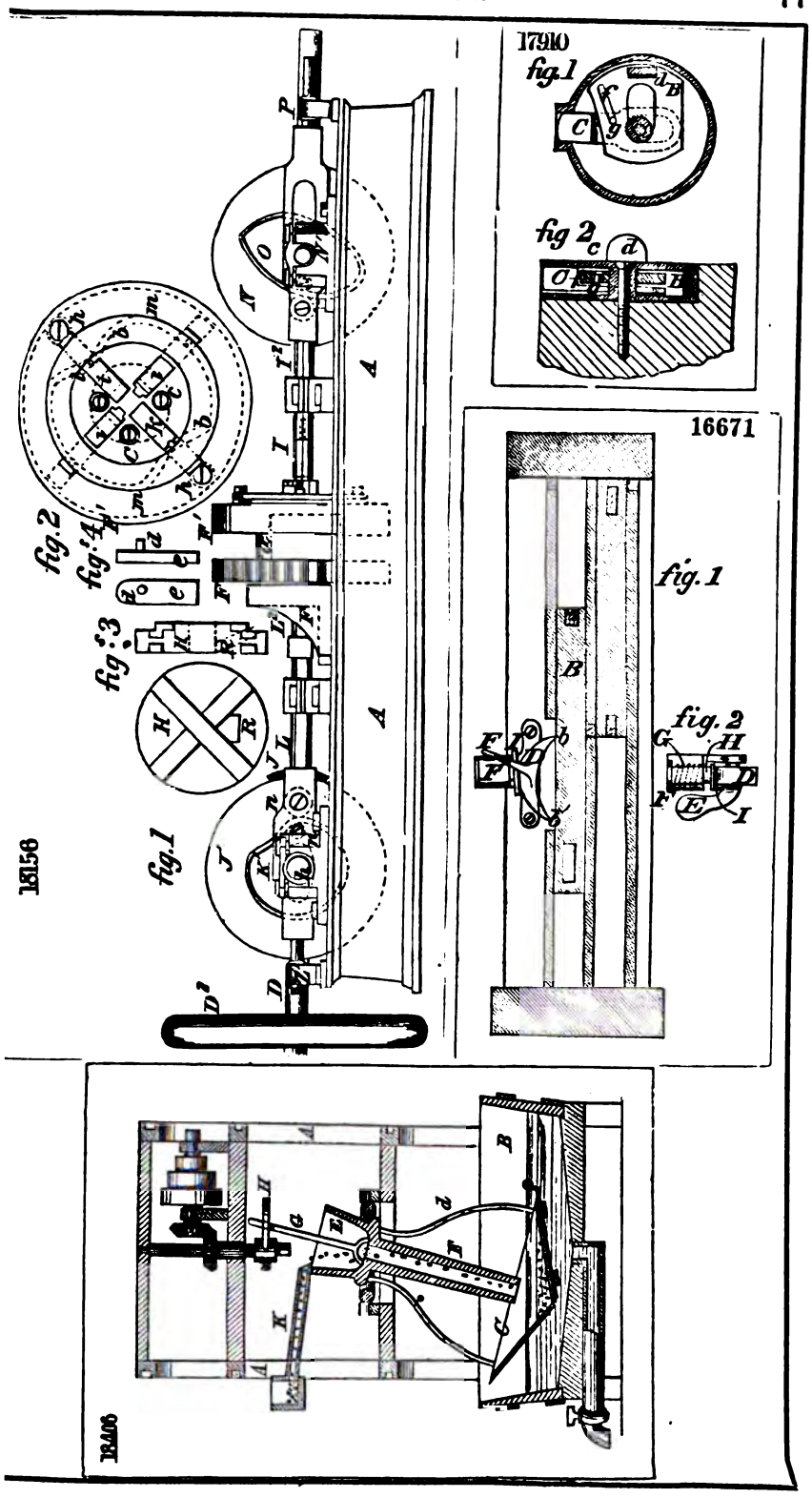
18156
fig. 1
fig. 2
fig. 3
fig. 4
16671
fig. 1
fig. 2
17910
fig. 1
fig. 2
18406

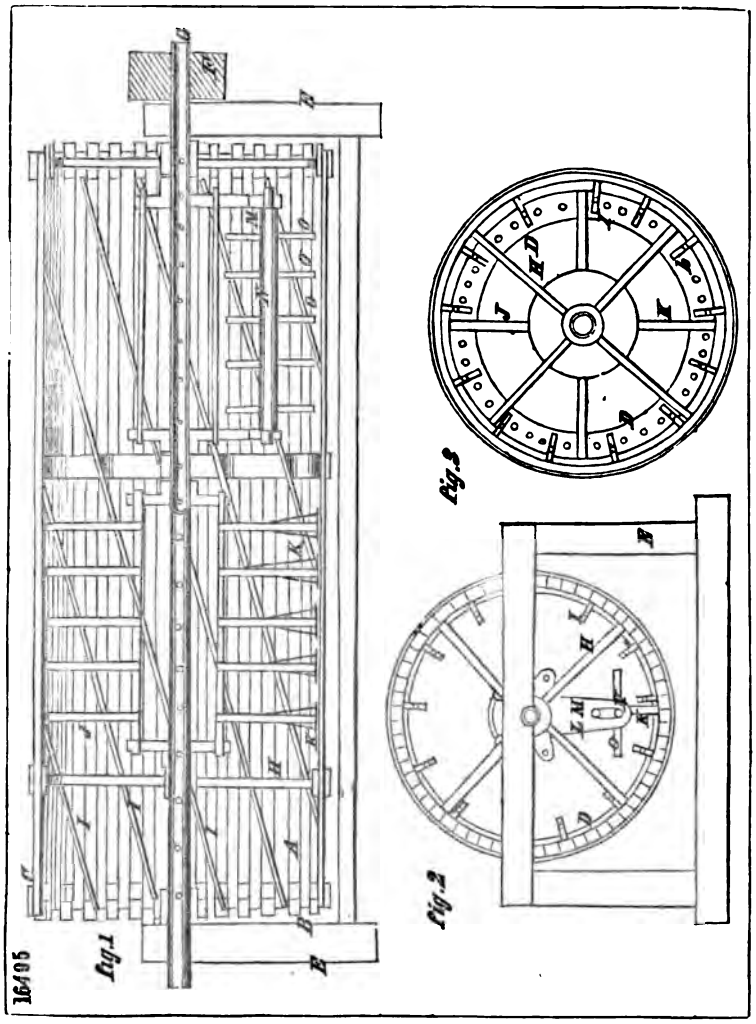
16495
fig.1
fig.2
fig.3

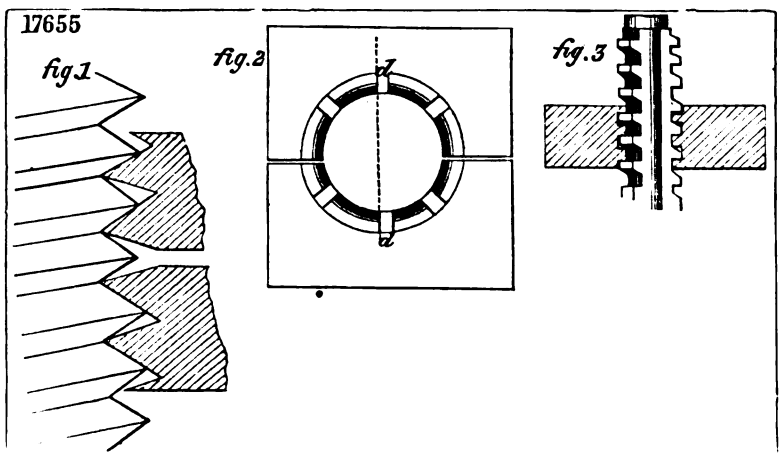
17655
fig.1
fig.2
fig.3

18085 *fig. 1*

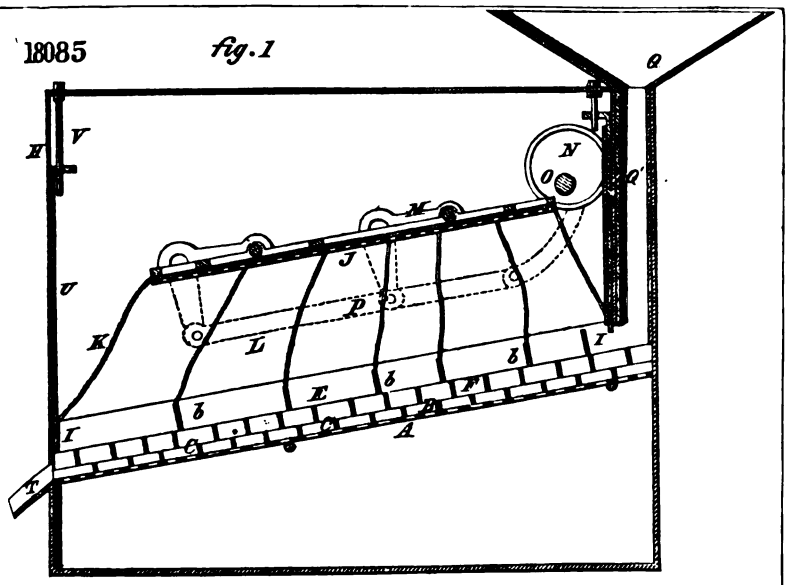

fig. 2

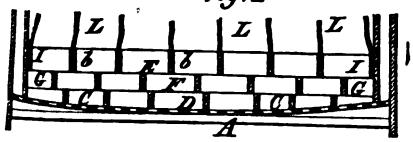

fig. 3

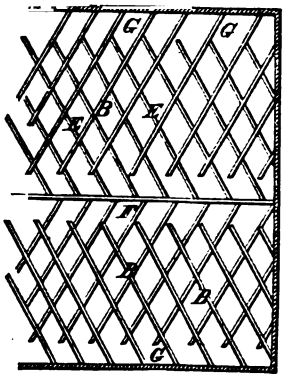

17452

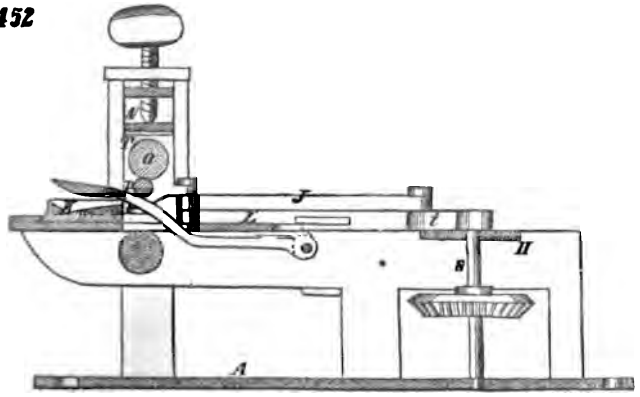

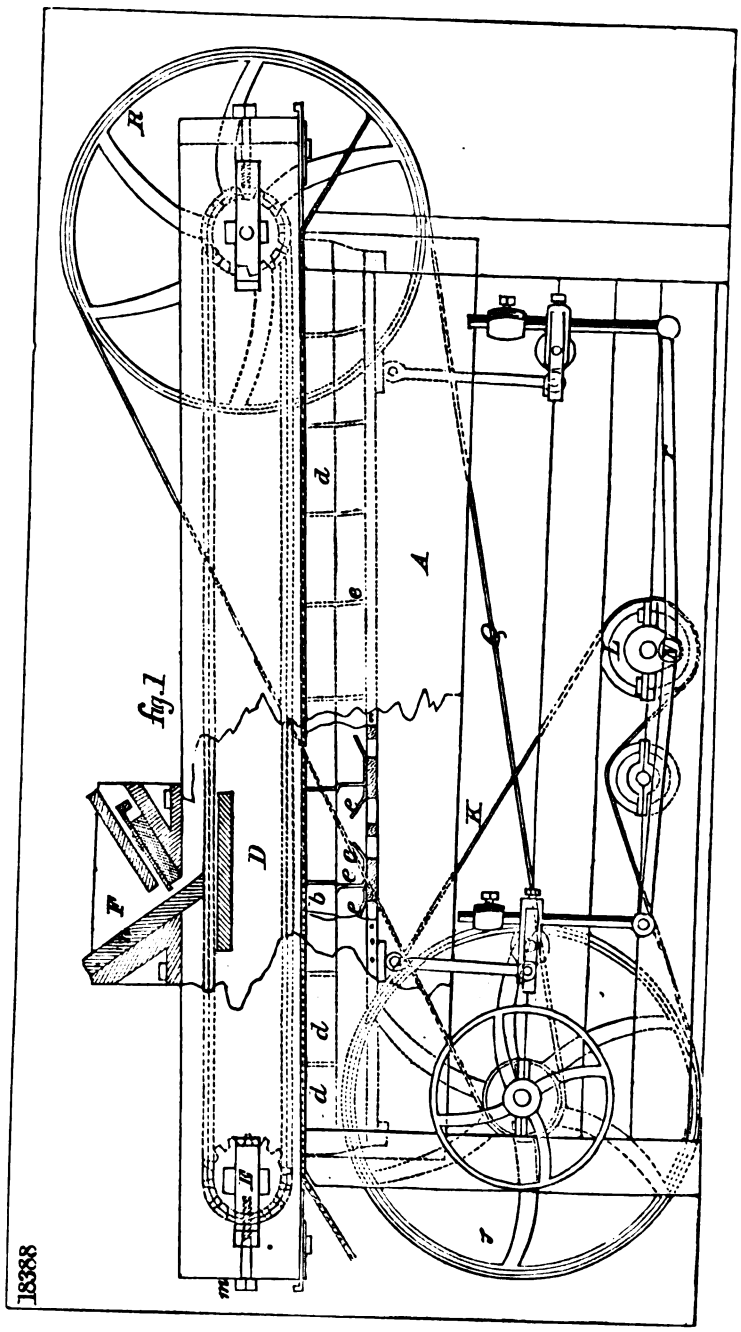
fig.1
A
D
F
K
18388

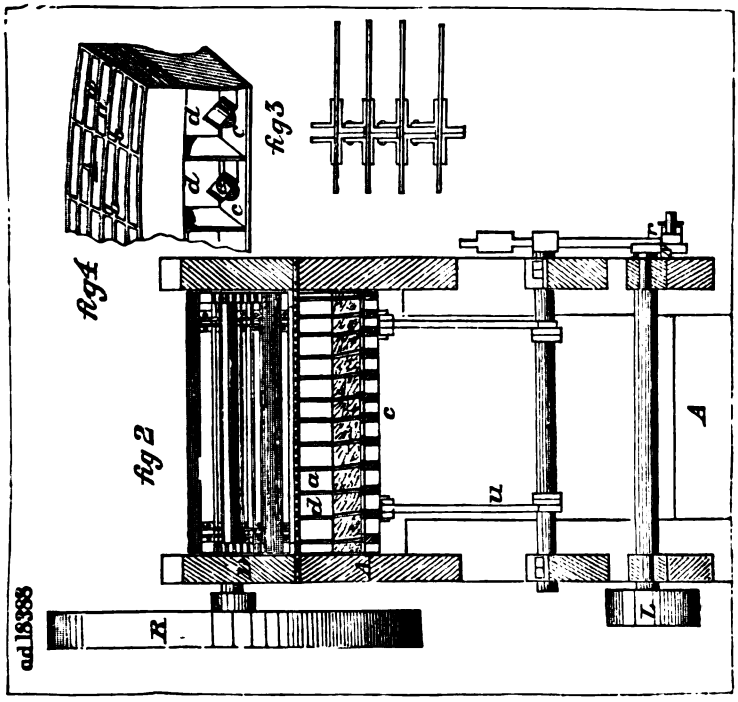
fig 4
fig 3
fig 2
ad 18388

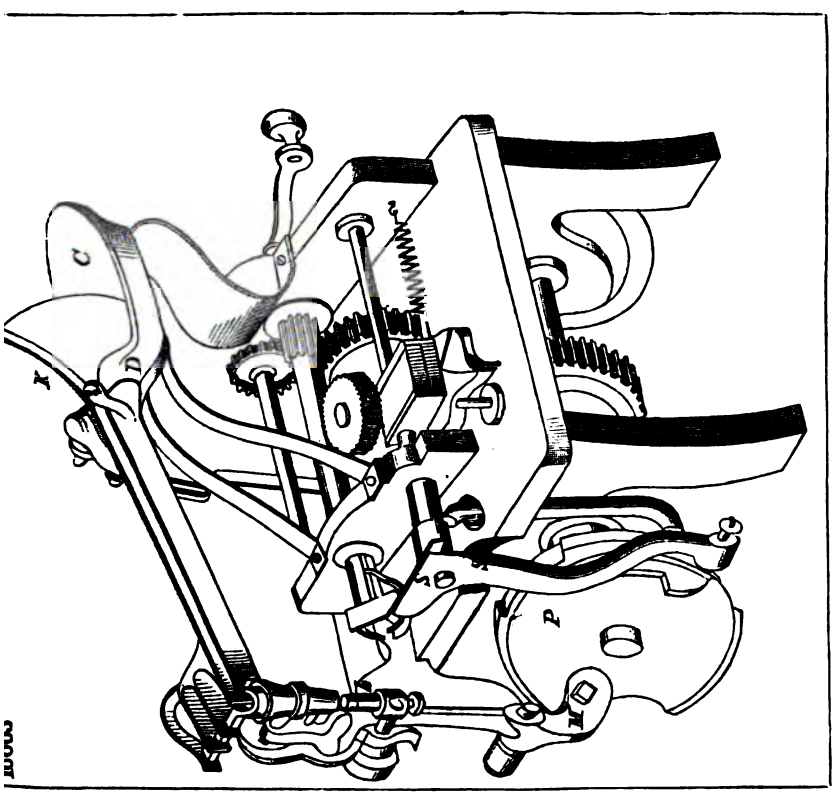

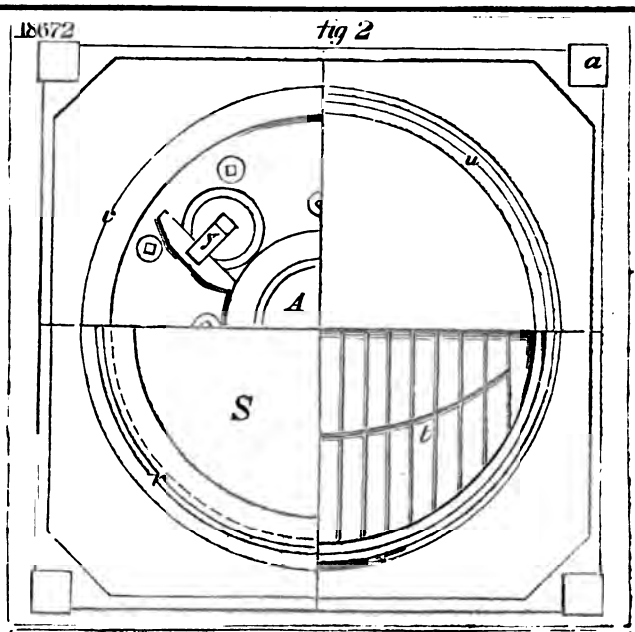
18672
fig 2
a
A
S

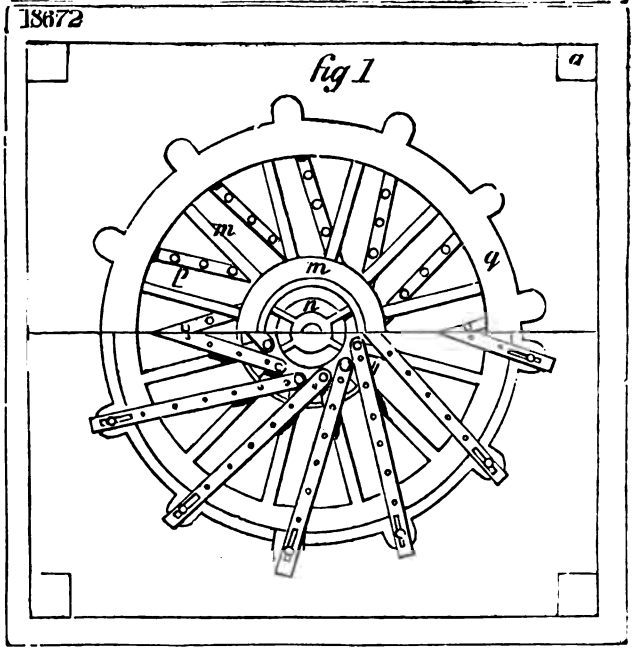
18672
fig 1
a
m
m
q

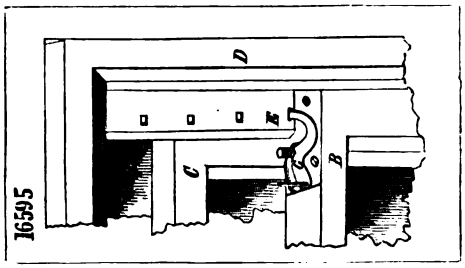
16595
D
B

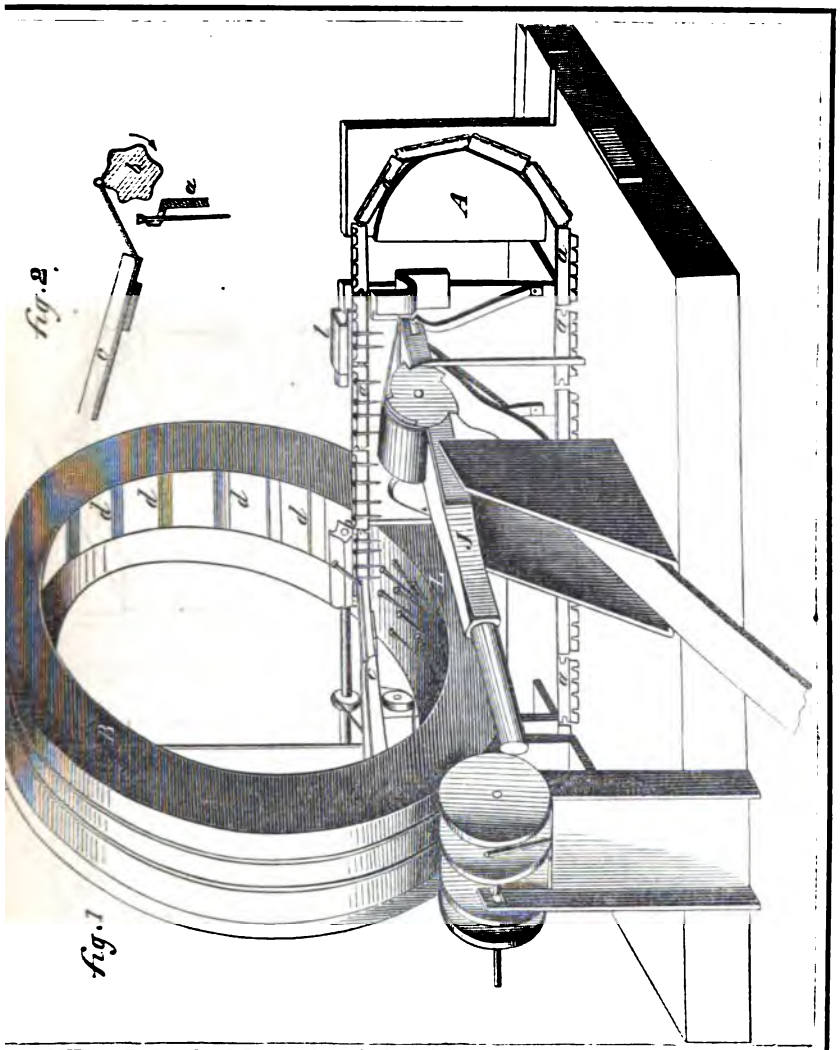

8

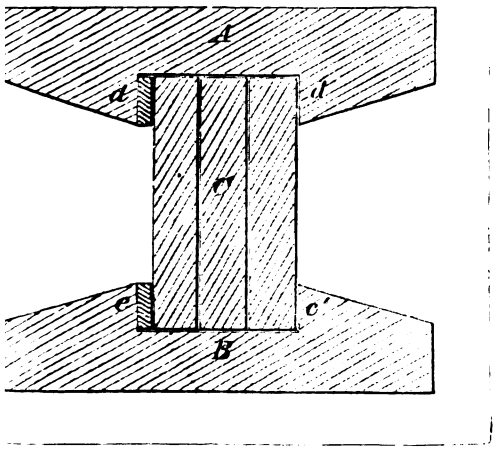

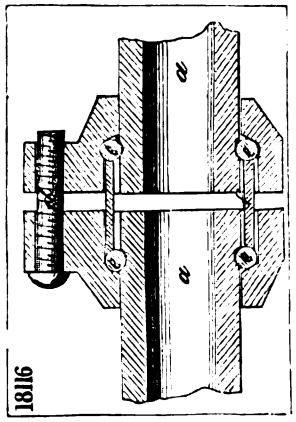

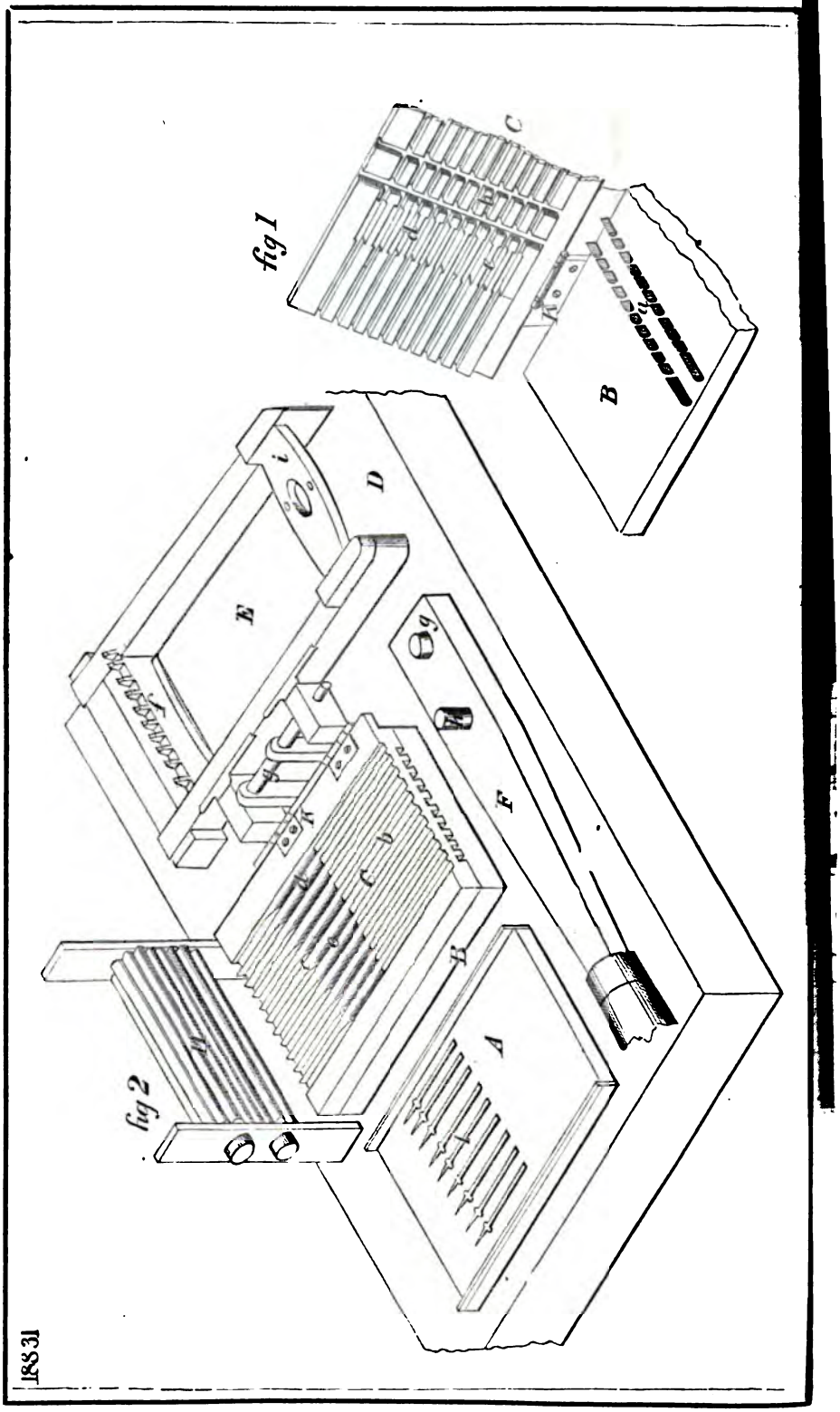
fig 1
fig 2
A
B
C
D
E
F
1883 1

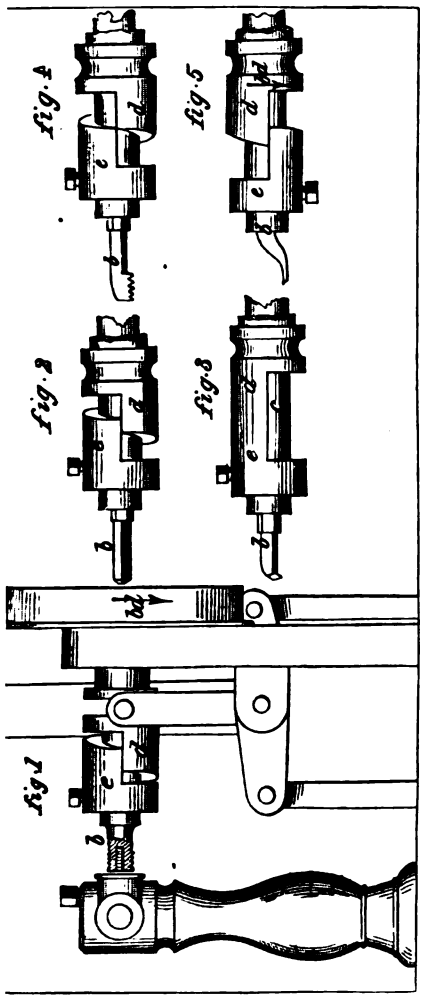
fig. 4
fig. 5
fig. 2
fig. 3
fig. 1

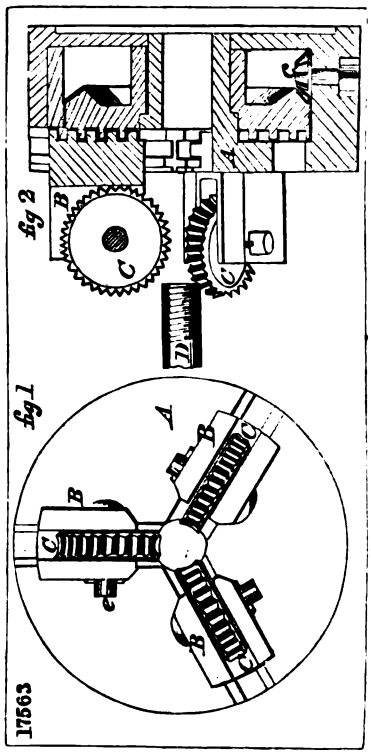
fig 2
fig 1
17563

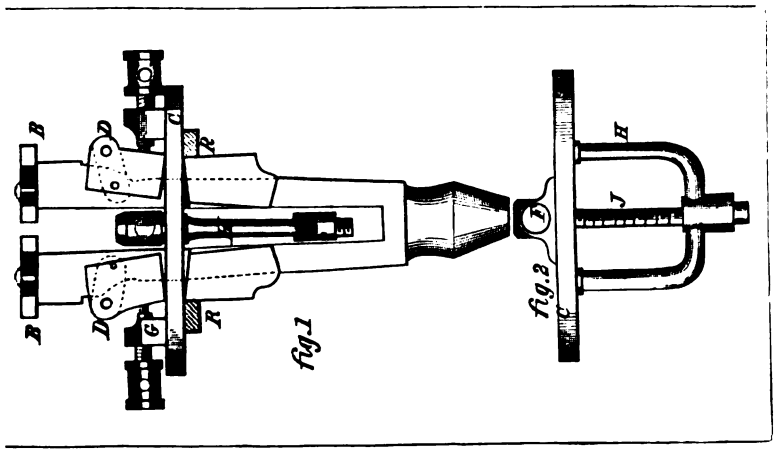
fig. 1
fig. 2

17393

fig.1

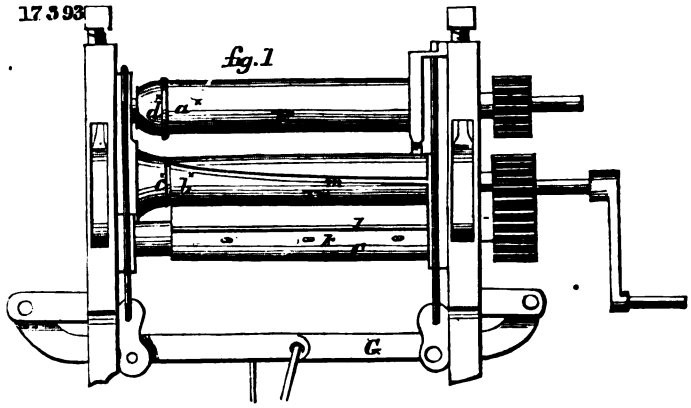

fig.2

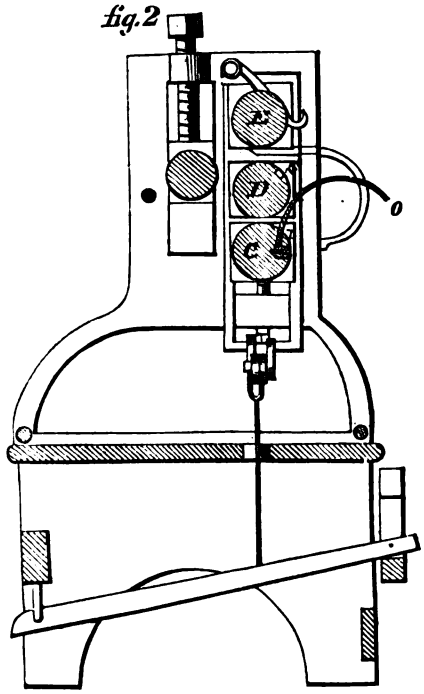

fig.3

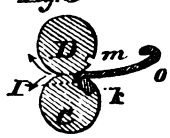

18962

fig.1

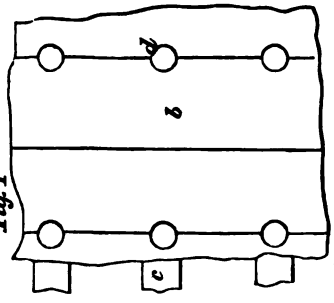

fig.2

16967

fig.1

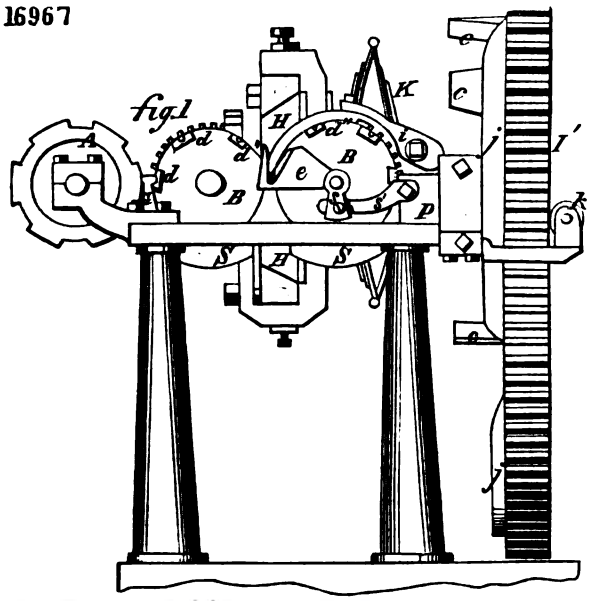

fig.2

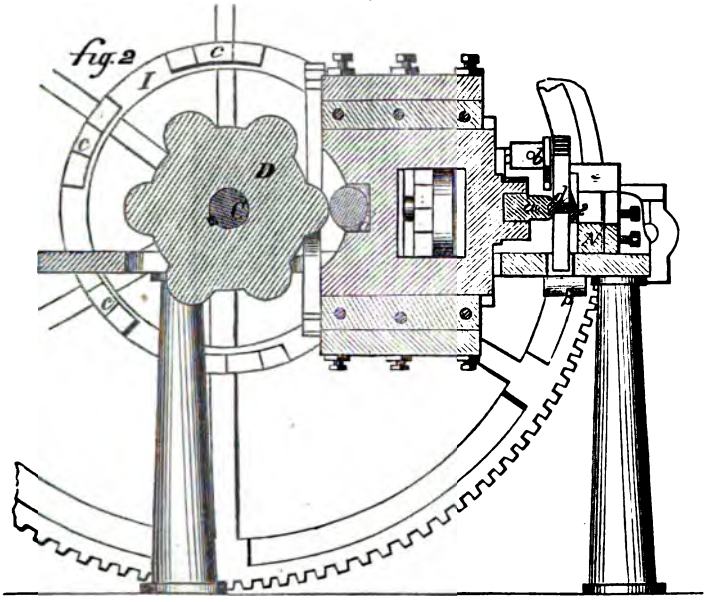

fig.3

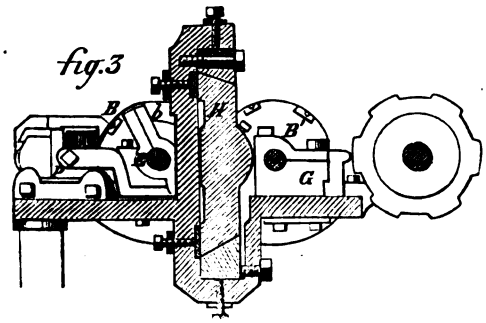

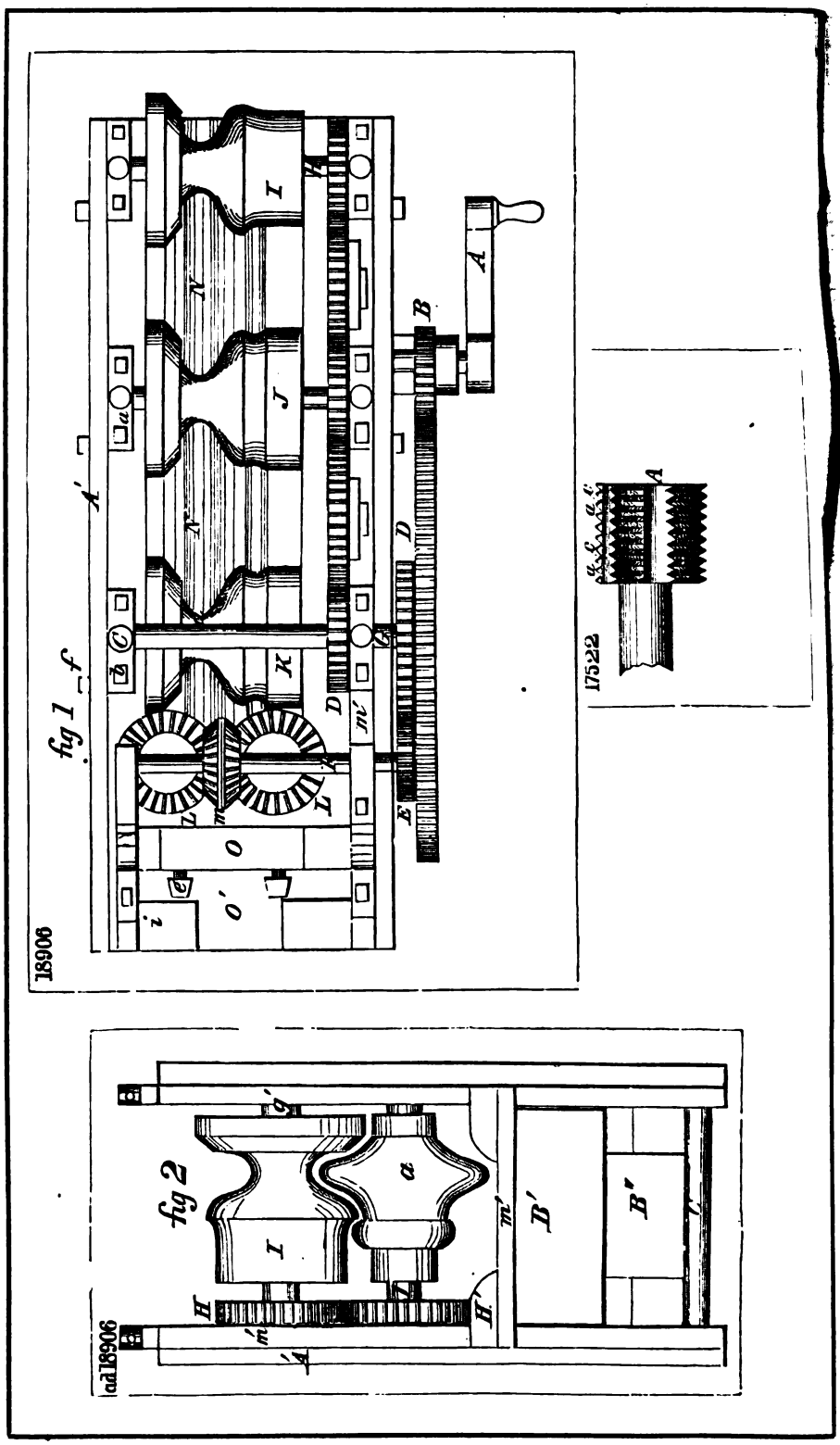
fig 1
18906
17522
fig 2
18906

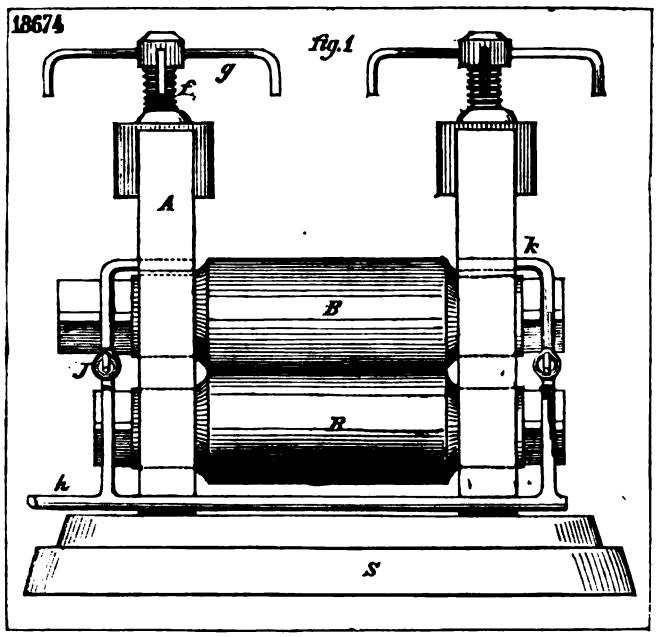
18674
fig.1
g
f
A
k
B
J
B
h
S

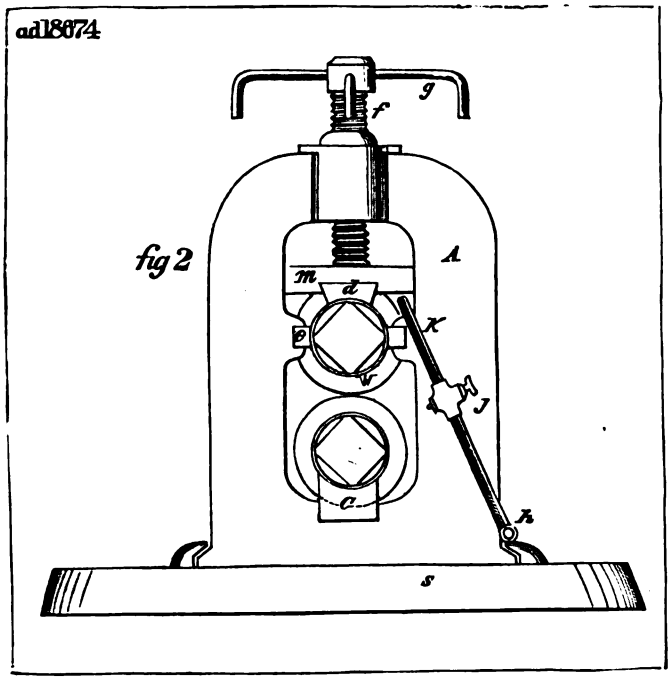
ad18674
g
f
fig 2
A
m
d
K
e
v
J
C
h
s

16521

fig. 1

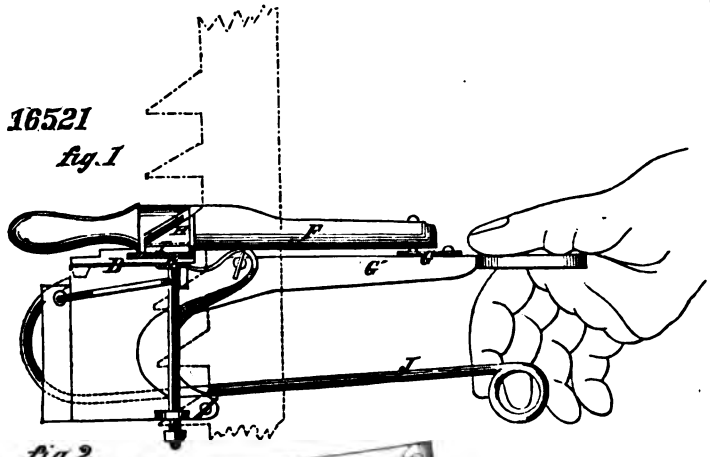

fig. 2.

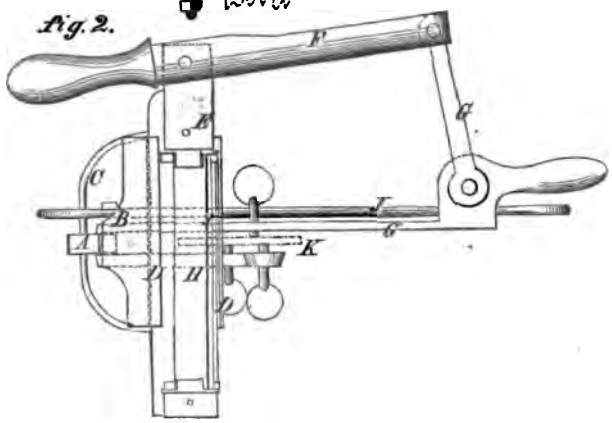

18684

fig. 1

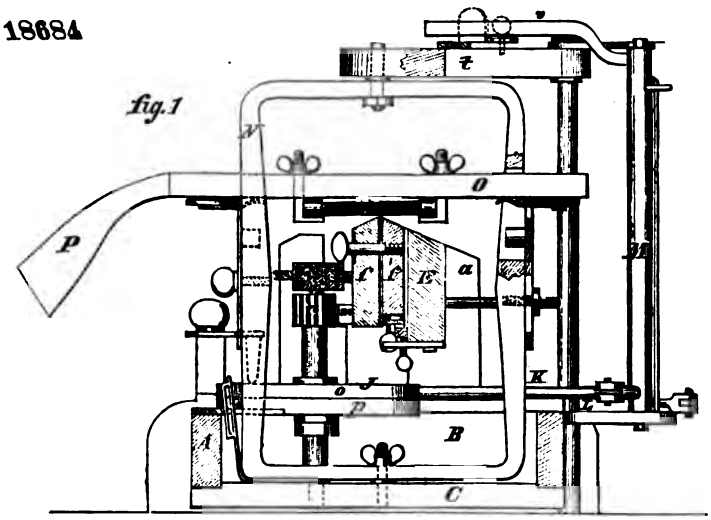

684.

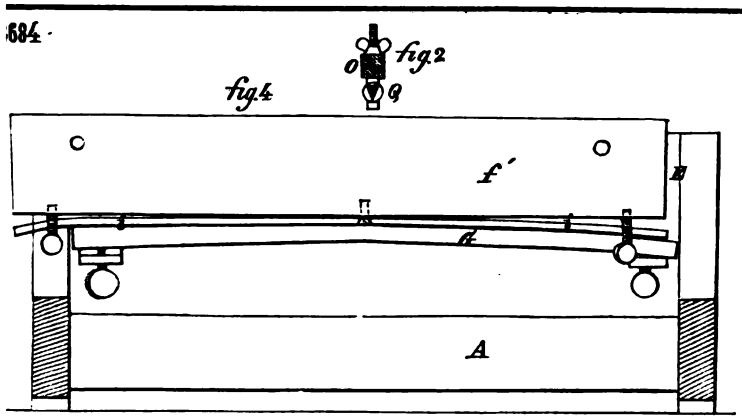

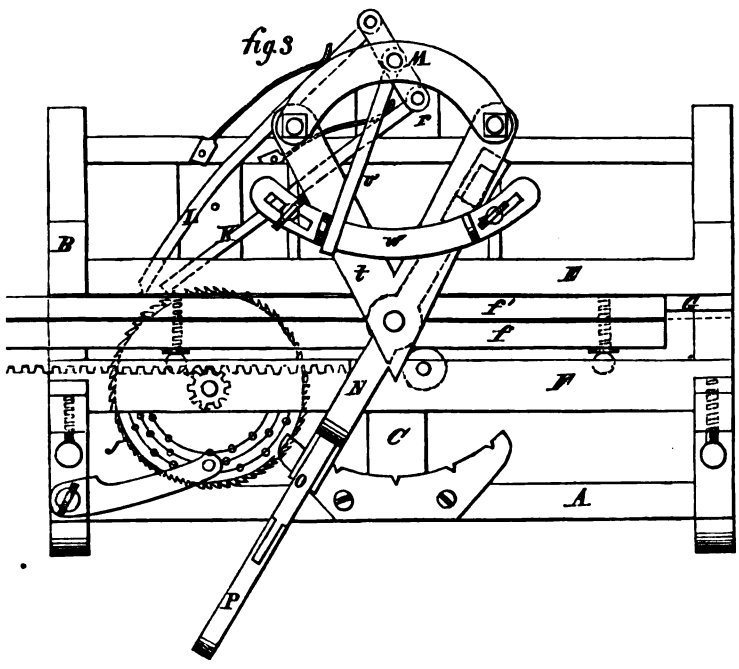

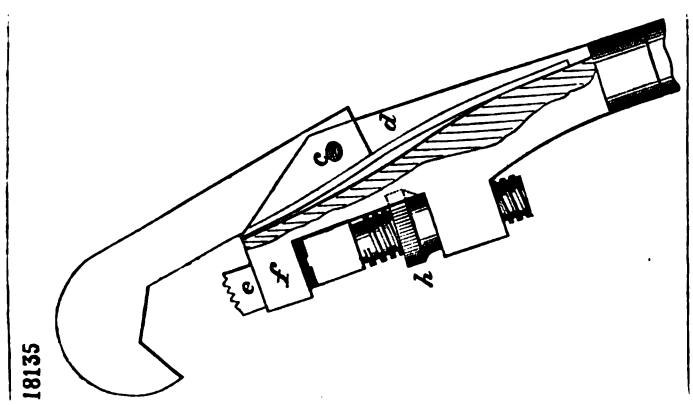

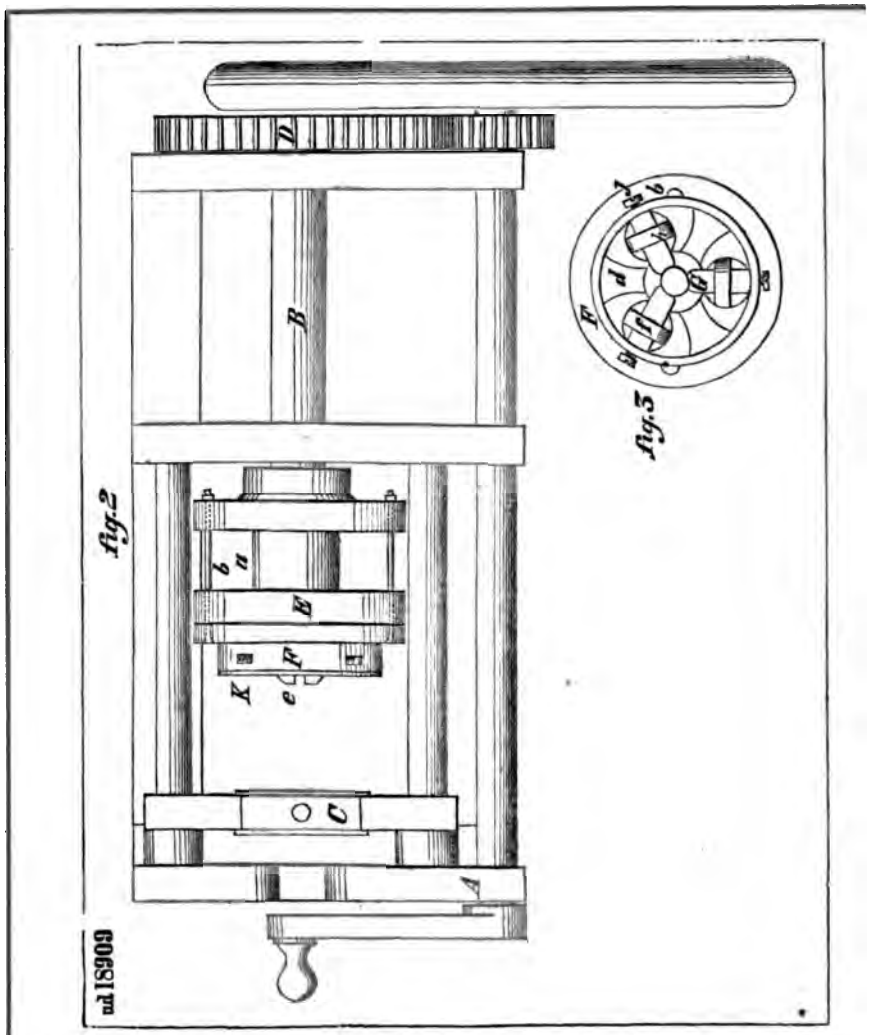

ad 18909

18909

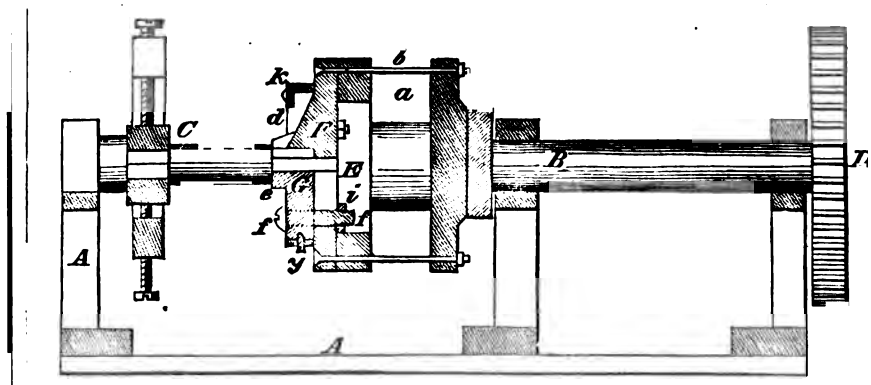

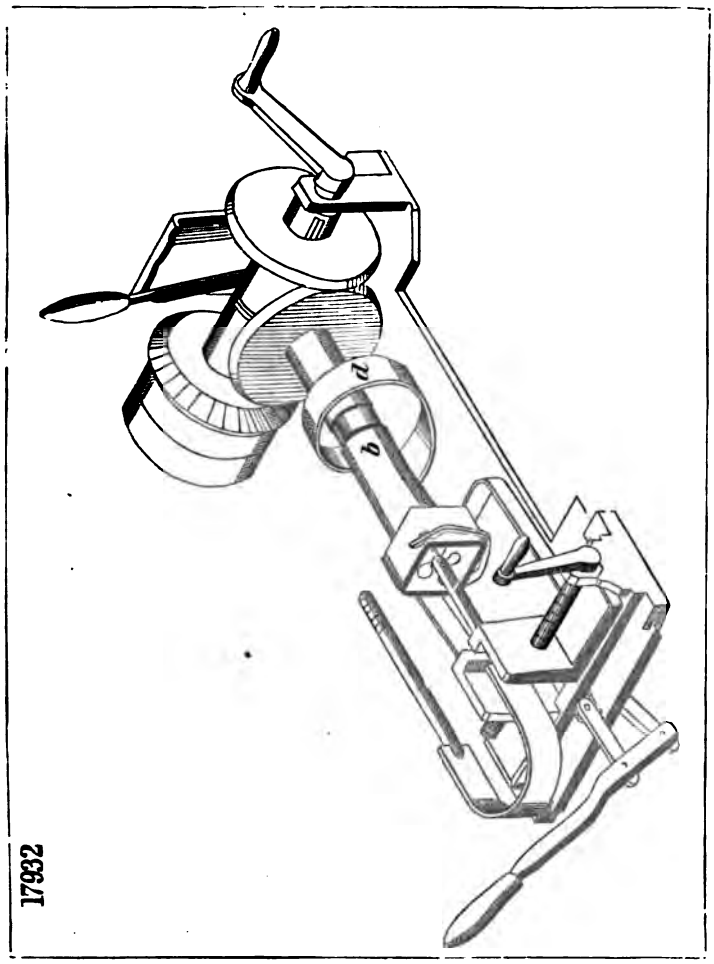

18553

fig.1

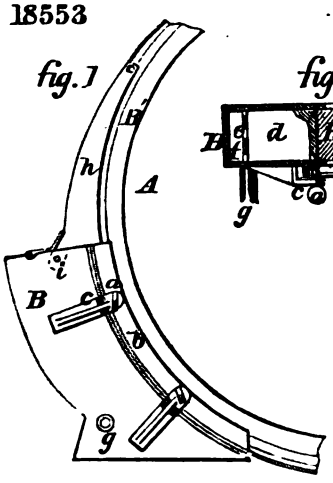

fig.3

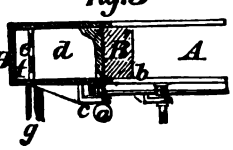

fig.2

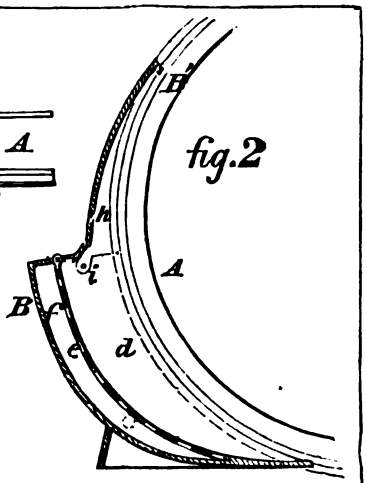

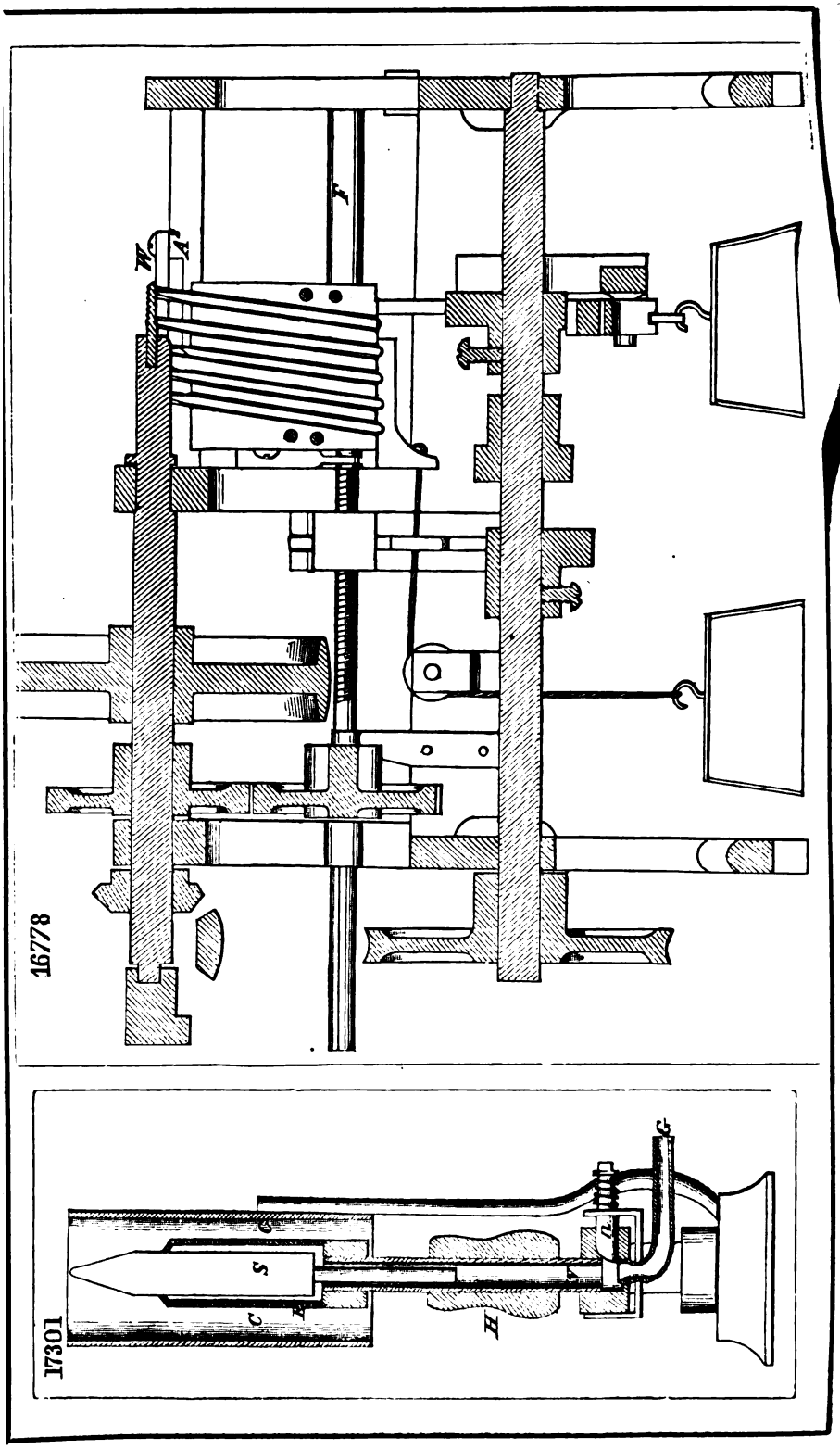
16778
17301

9014

fig. 1

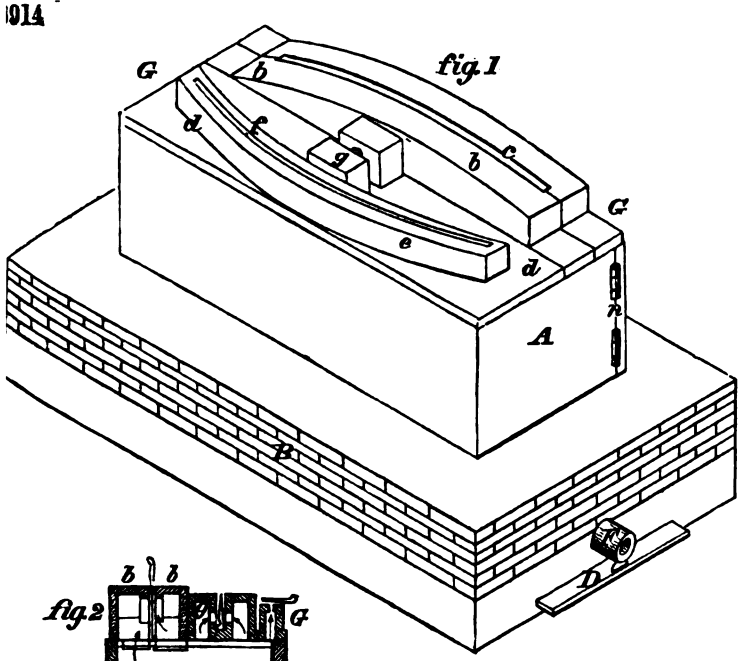

fig. 2

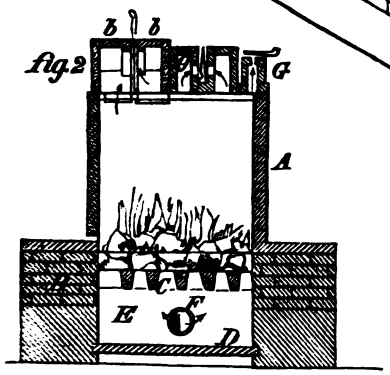

16331

fig. 1

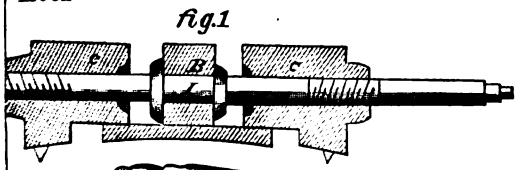

fig. 2

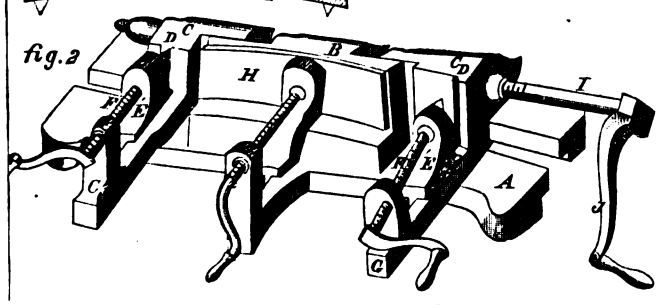

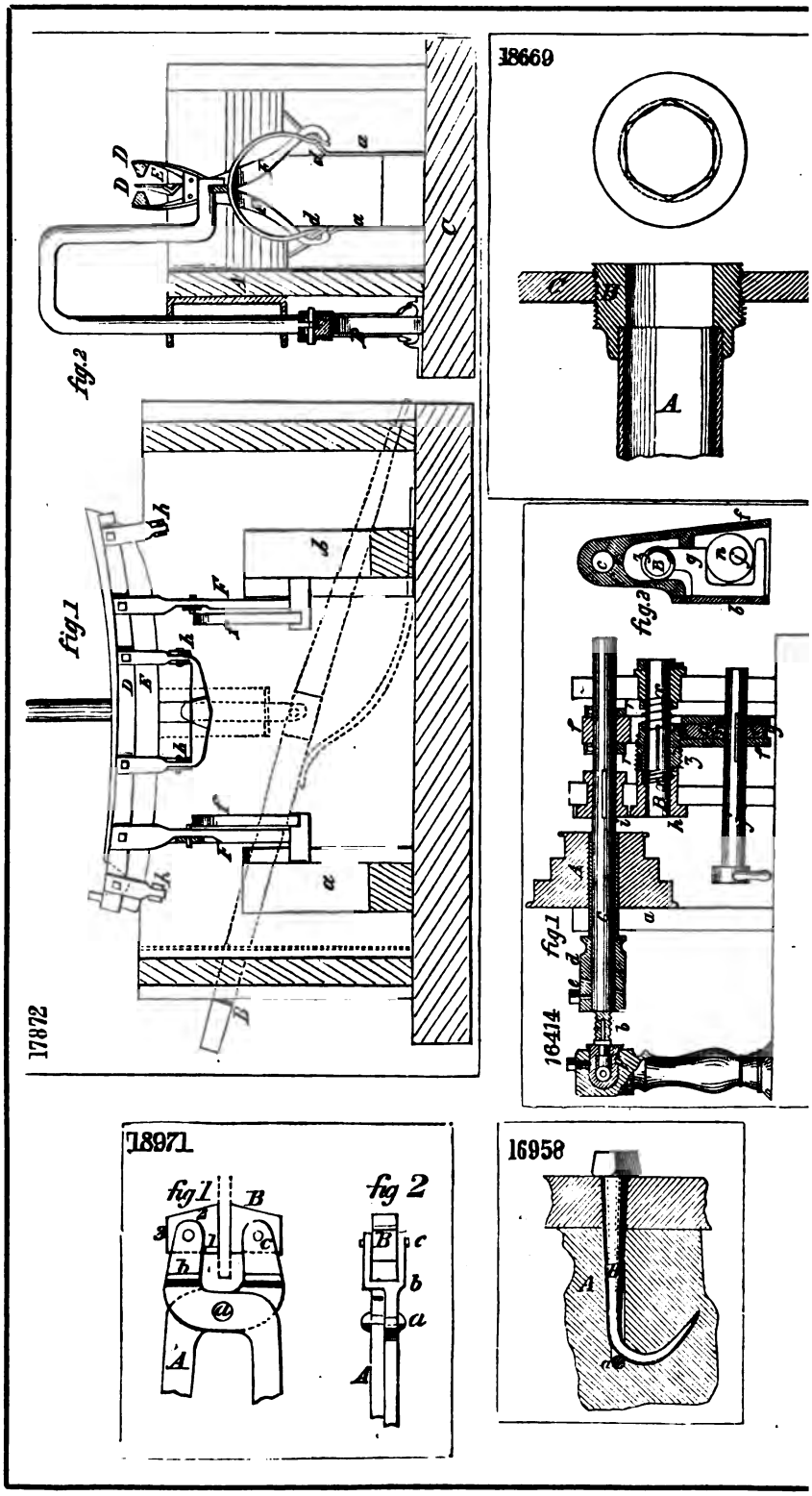
17872
fig.1
fig.2
18669
16414
fig.1
fig.2
18971
fig 1
fig 2
16958

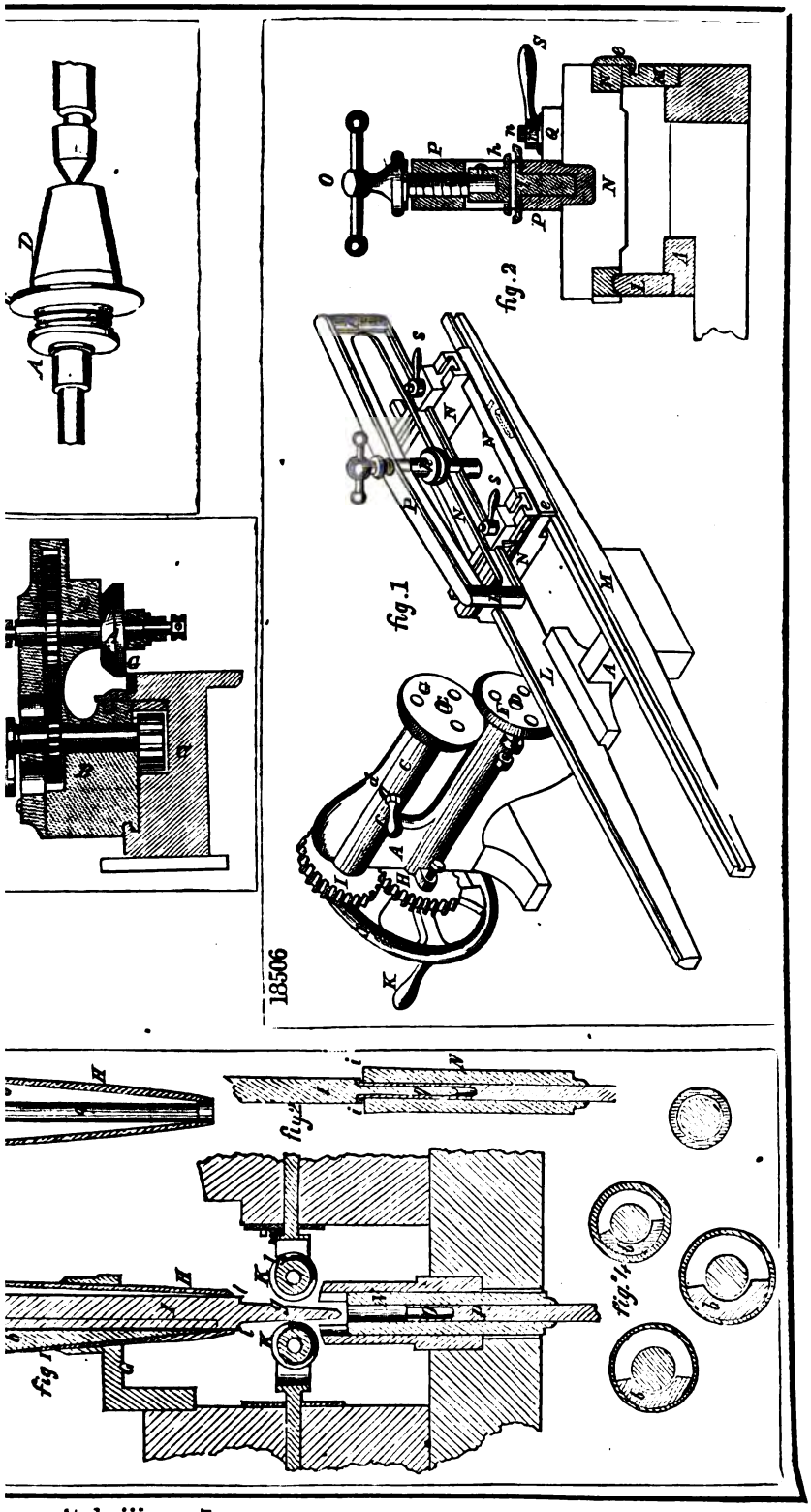
fig.1
fig.2
fig.3
fig.4
18506

18091

fig. 2

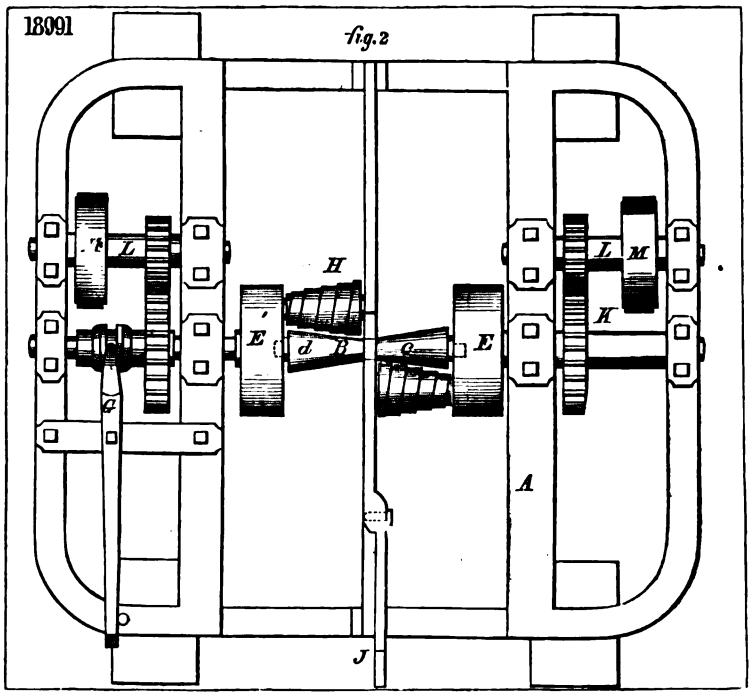

18091

fig 1

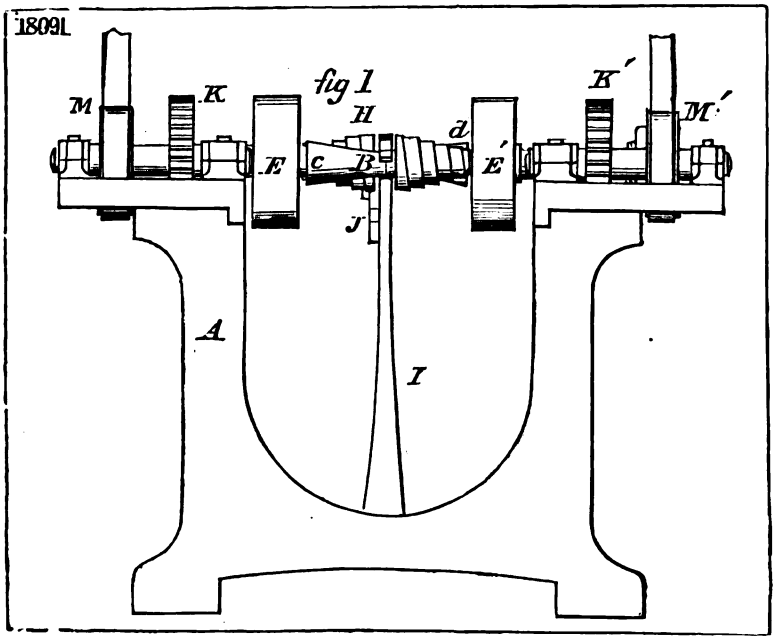

16396

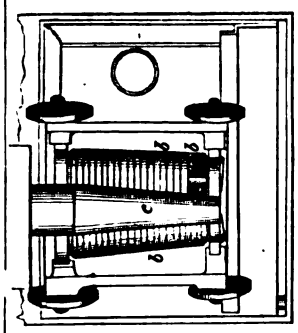

fig.1

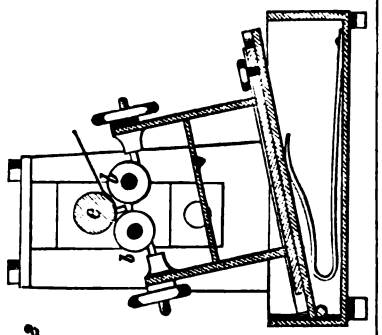

fig.2

17112

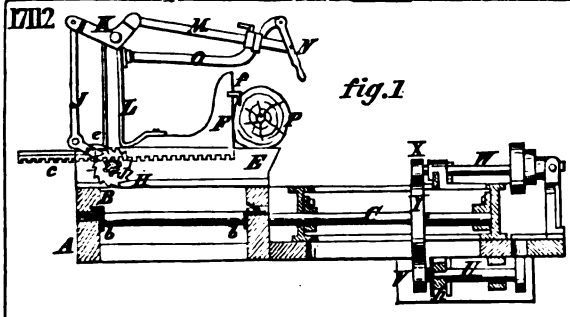

fig.1

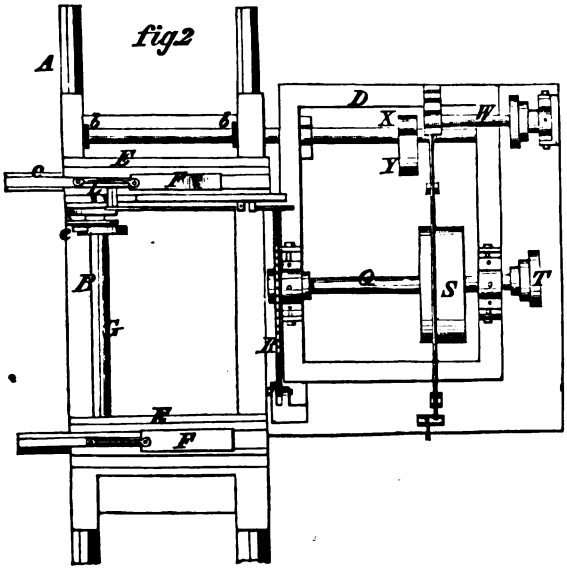

fig.2

16794

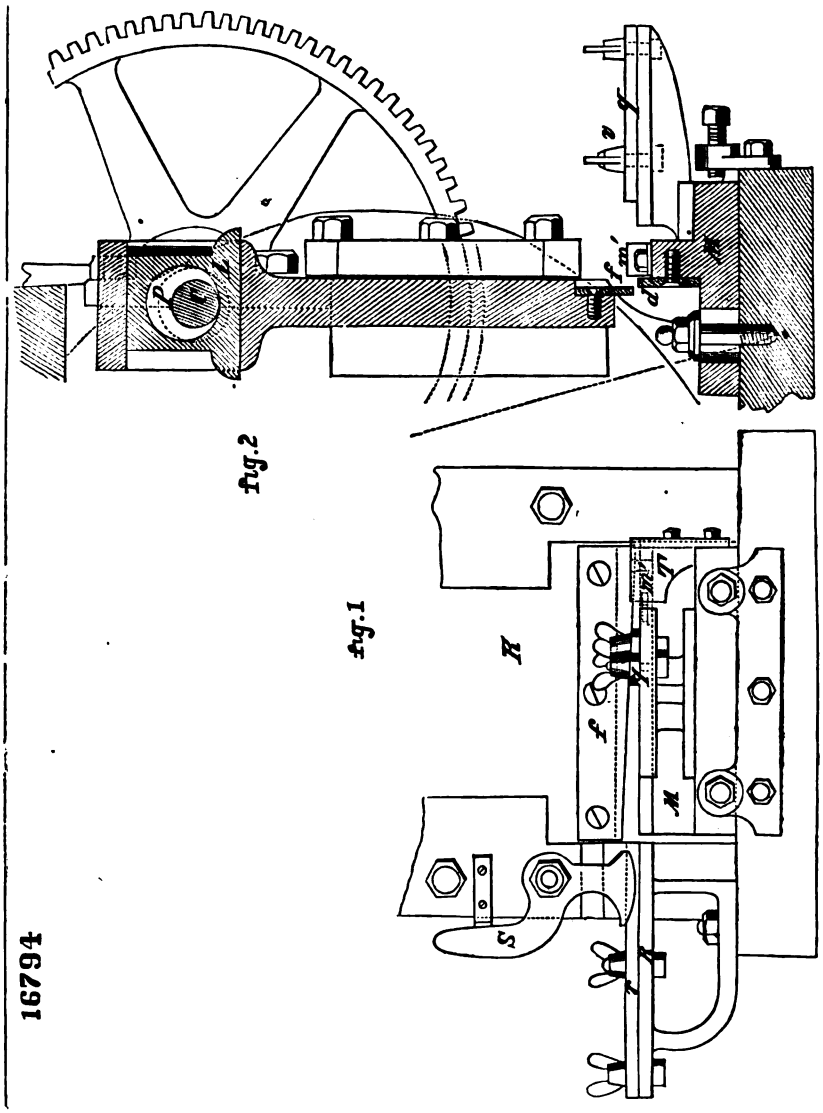

fig. 2

fig. 1

18205

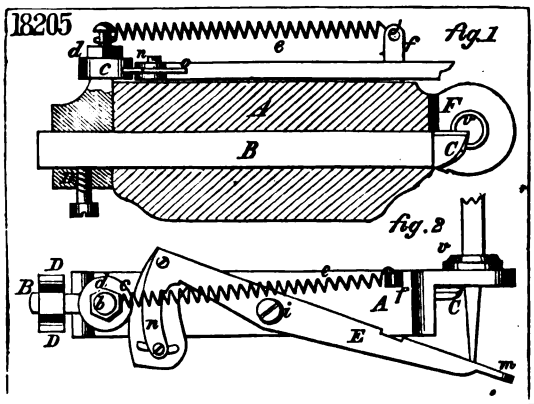

fig. 1

fig. 2

16630

fig 1

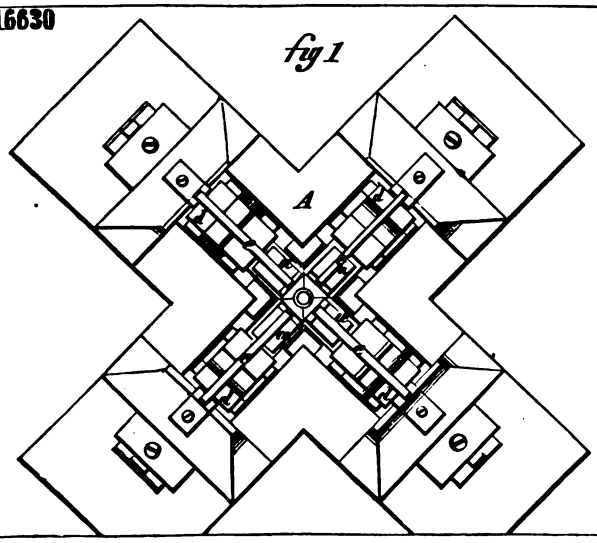

fig 2

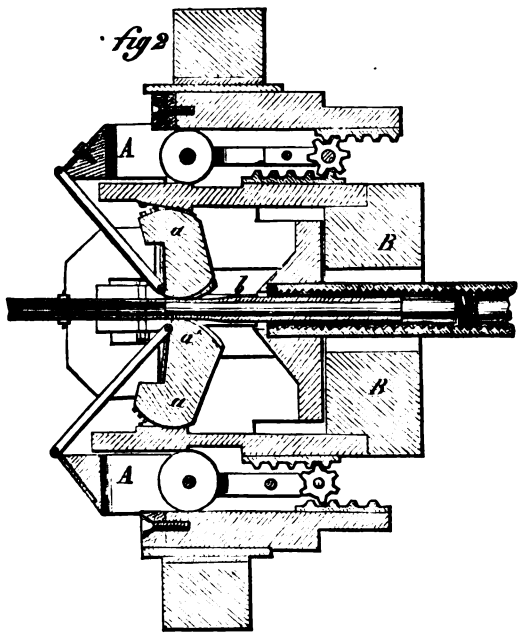

fig 3

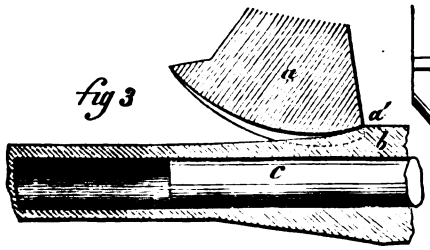

fig 4

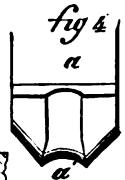

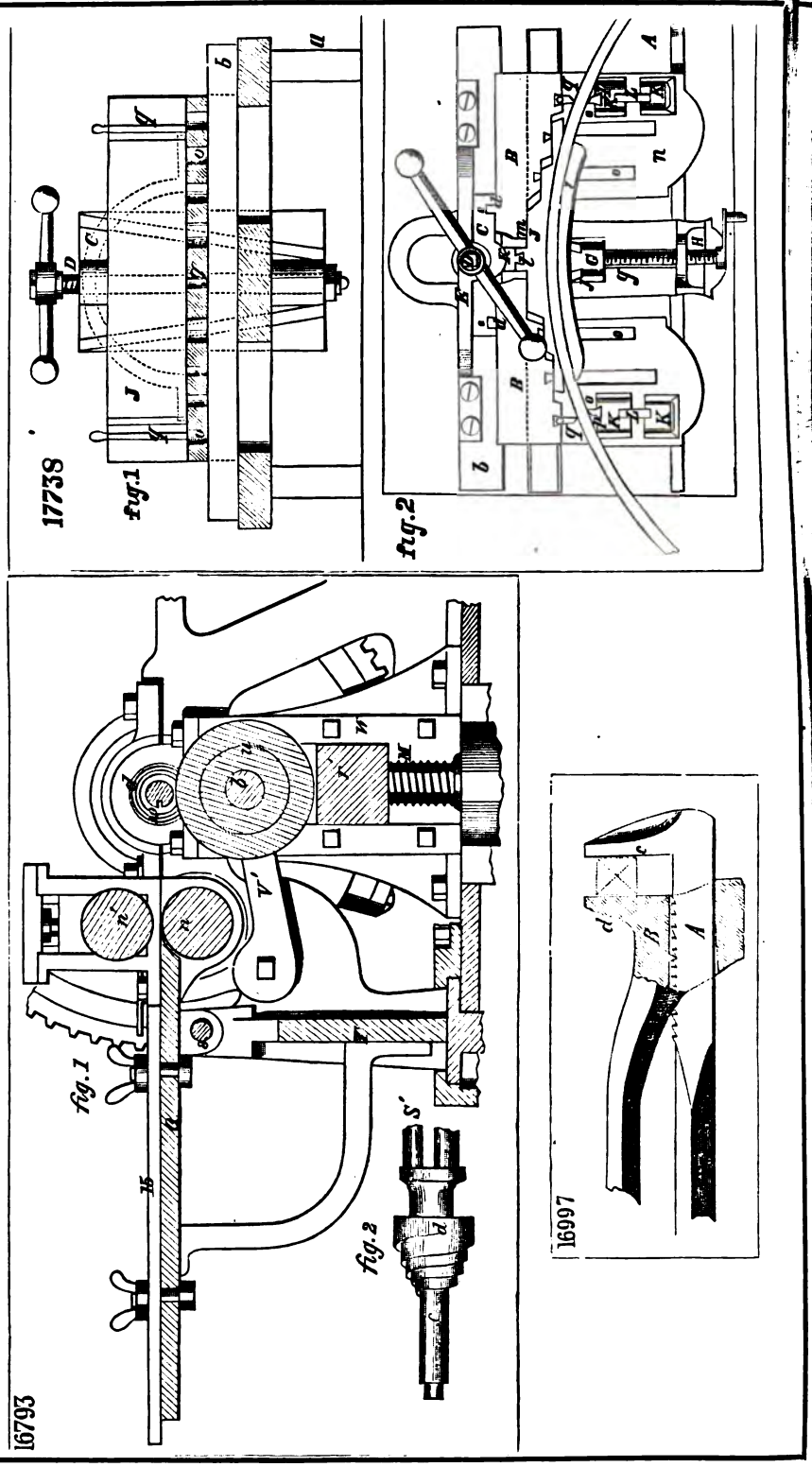
1738
fig.1
fig.2
16793
fig. 1
fig. 2
16997

18266

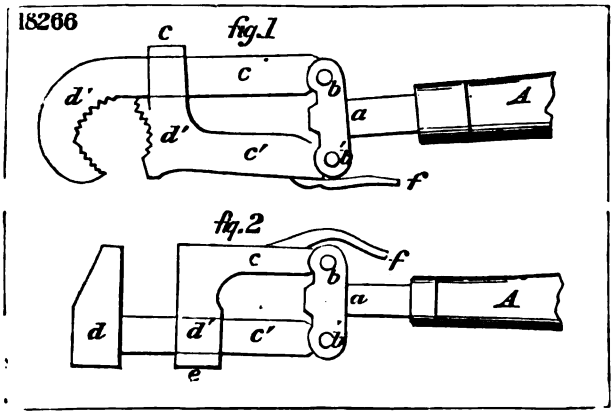

17590

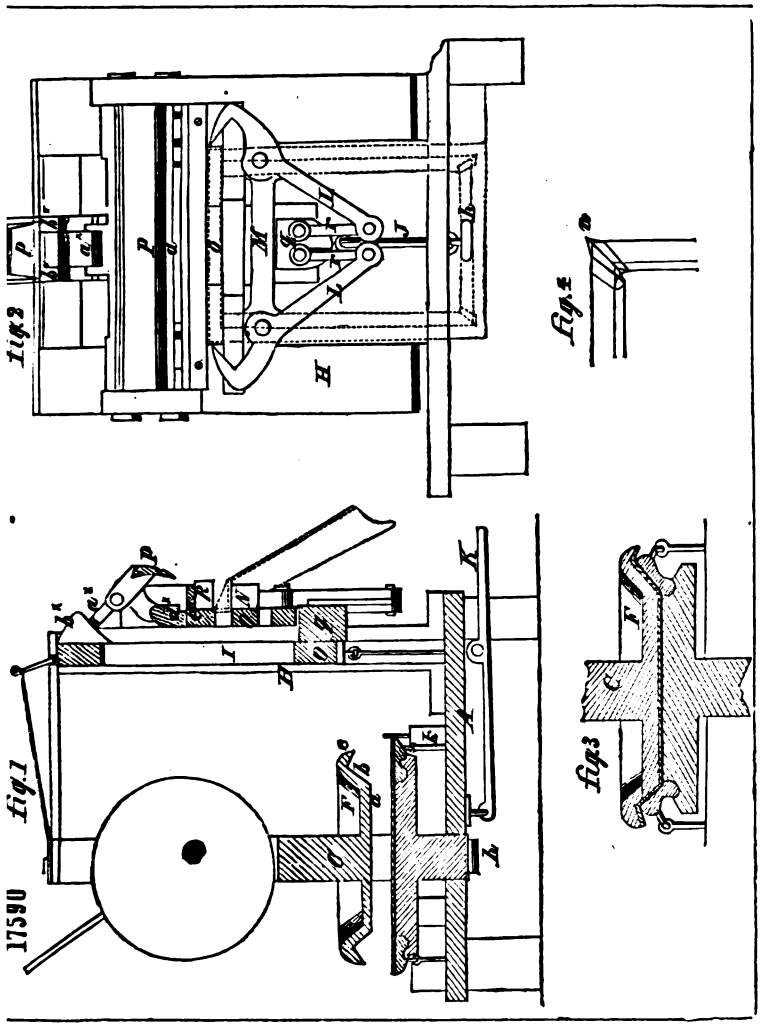

18970.

fig 1

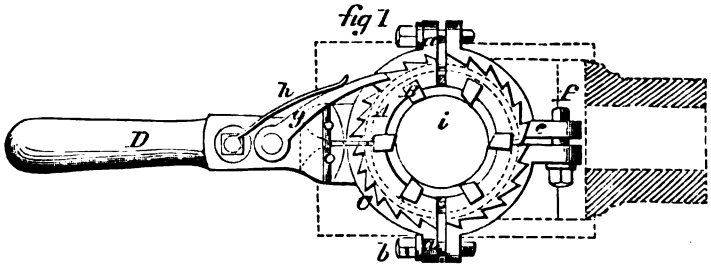

fig 2

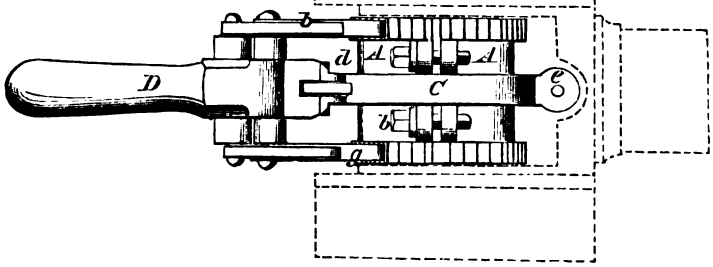

17229

fig.1

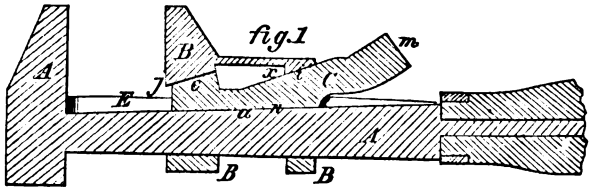

fig.2

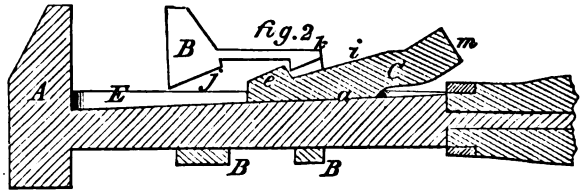

18294

fig.1

fig.2

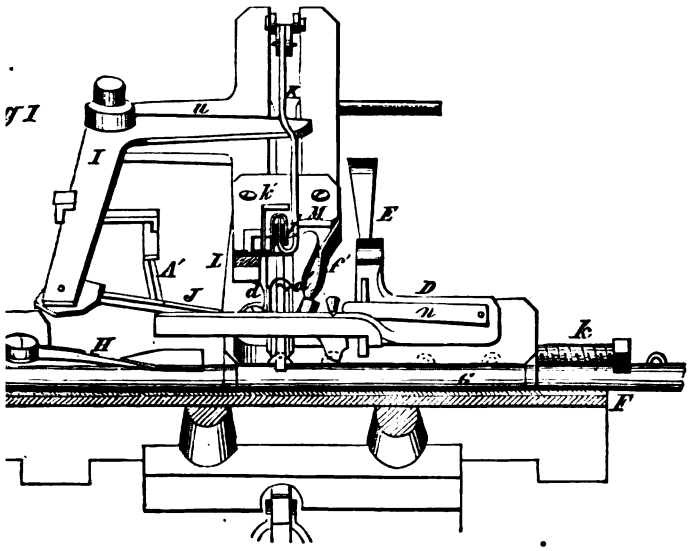
g 1
u
K
I
k'
M
E
A'
L
f'
J
d
D
n
k
H
G
F

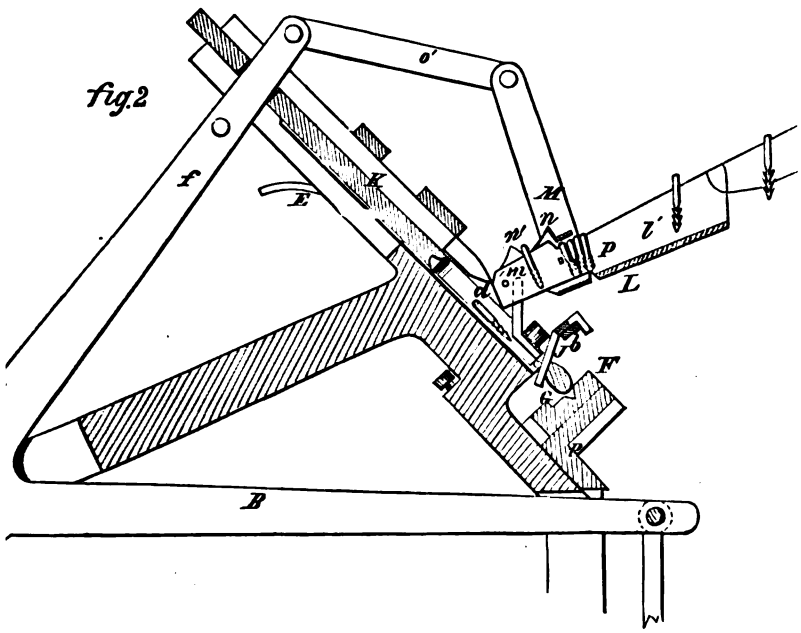
fig.2
o'
f
E
K
M
n
w'
p
l'
m
L
d
F
G
B

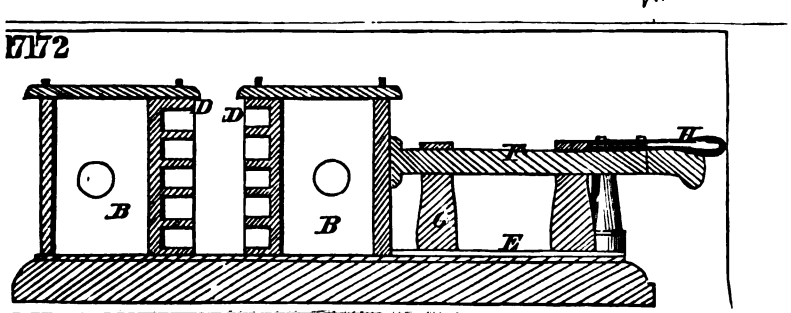
1772
D
D
B
B
F
H
G
E

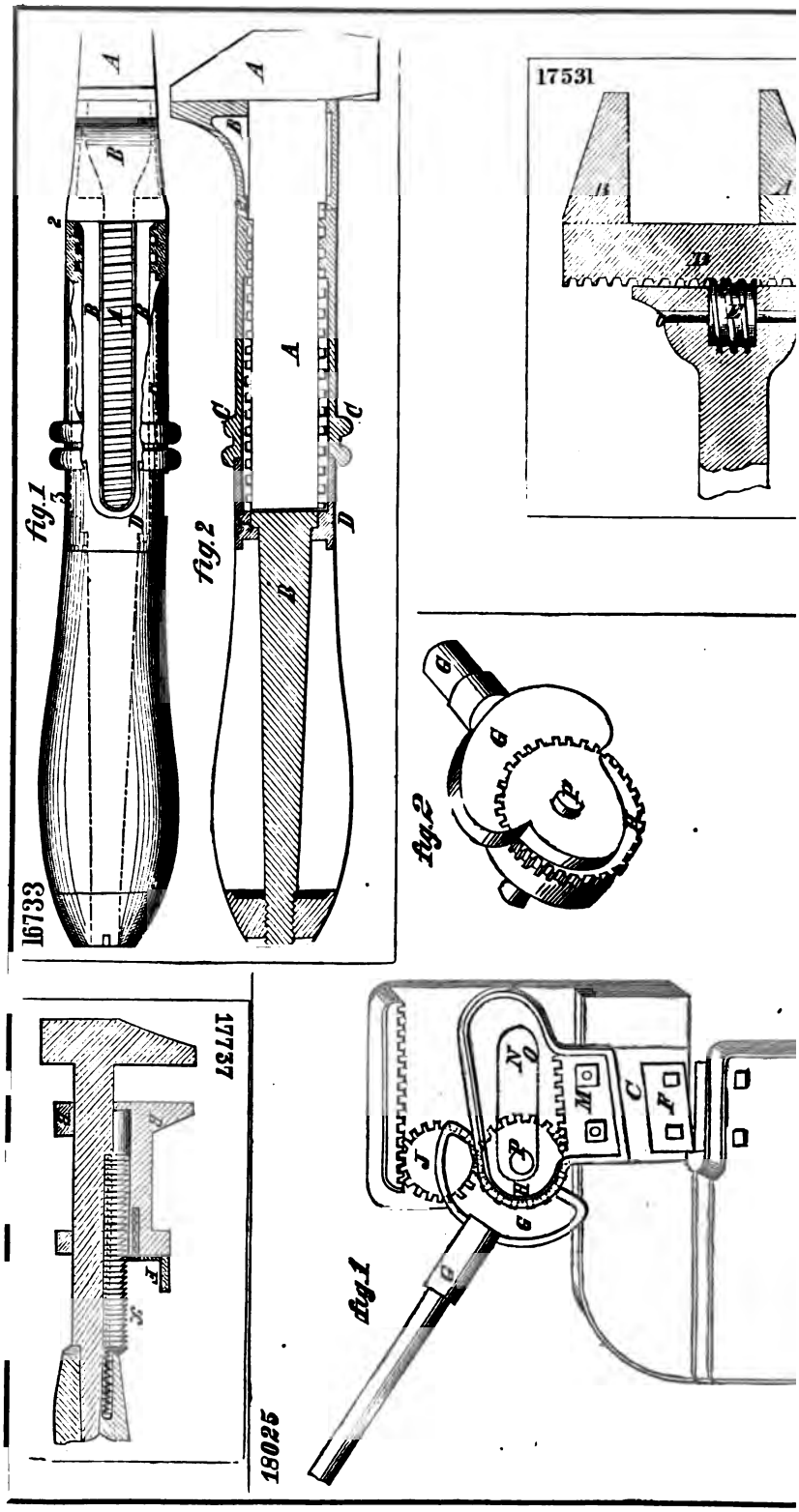
16733
fig. 1
fig. 2
17531
fig 2
fig 1
17737
18025

17120

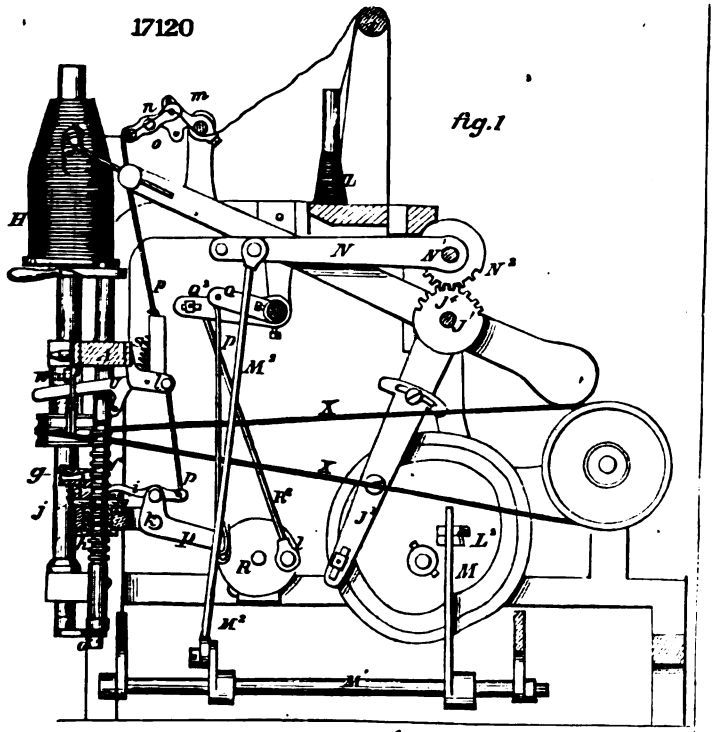

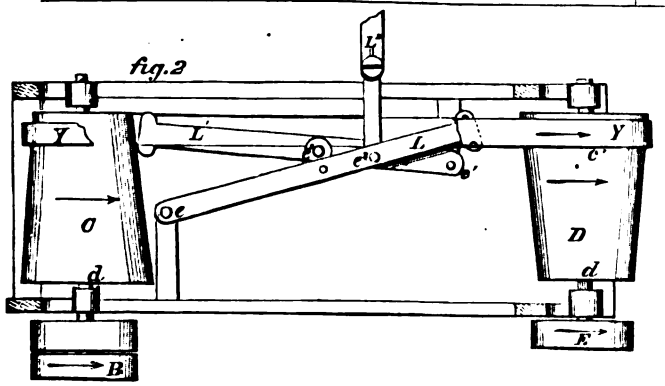

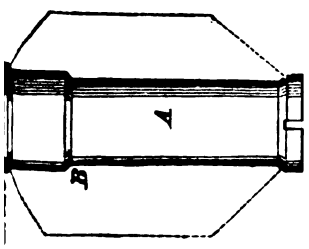

17950

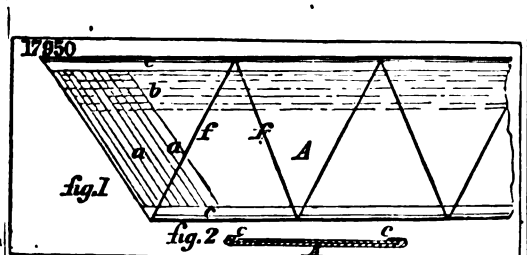

16744

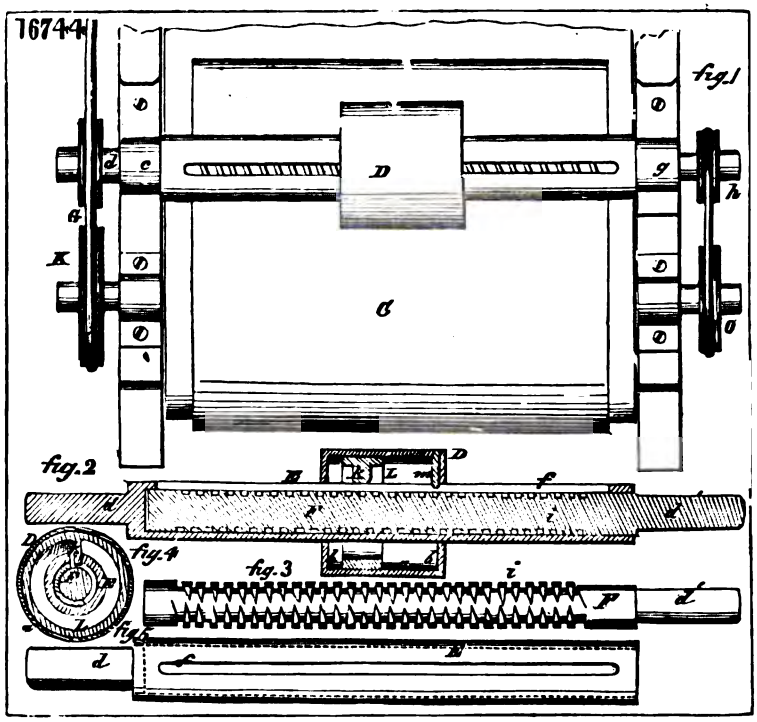

18124

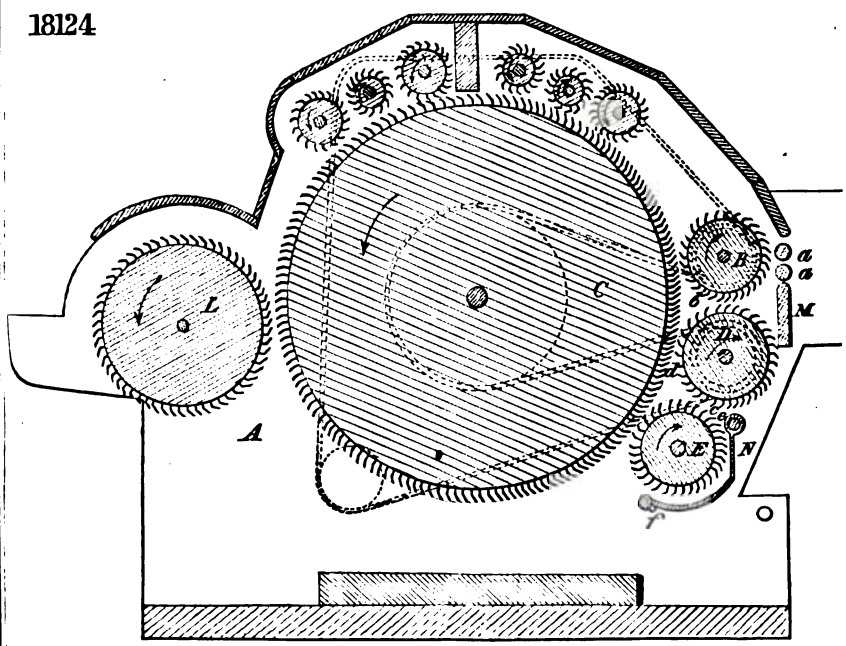

B257

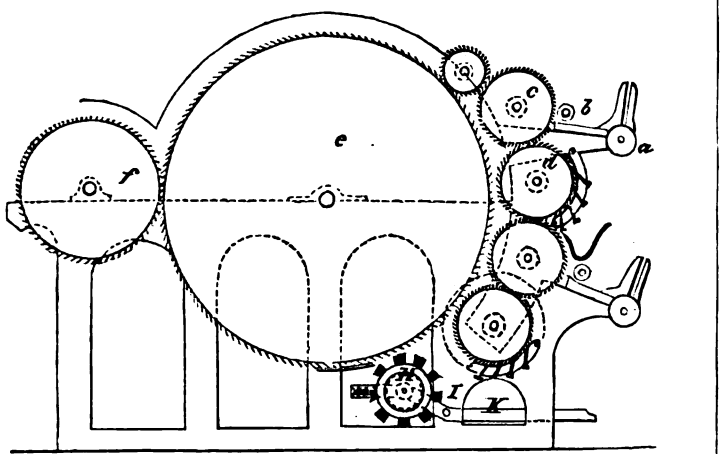

7094

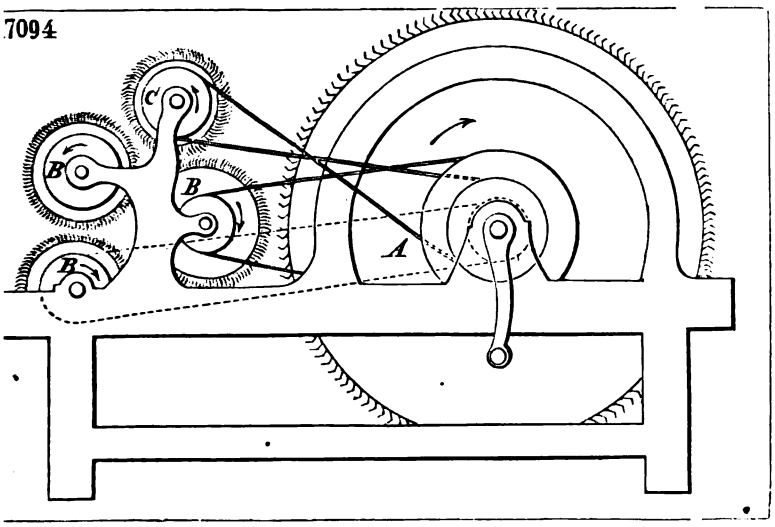

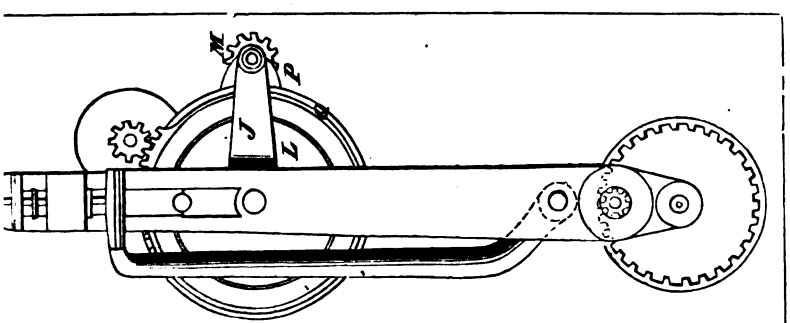

18423

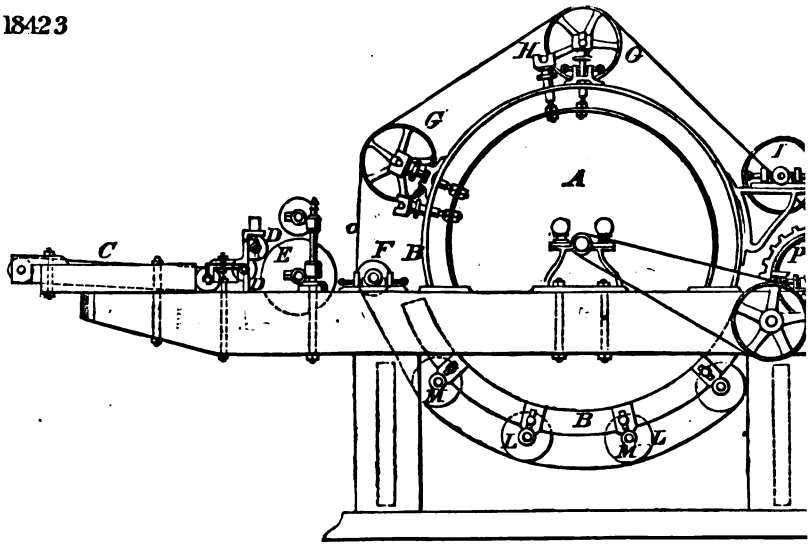

ad18787

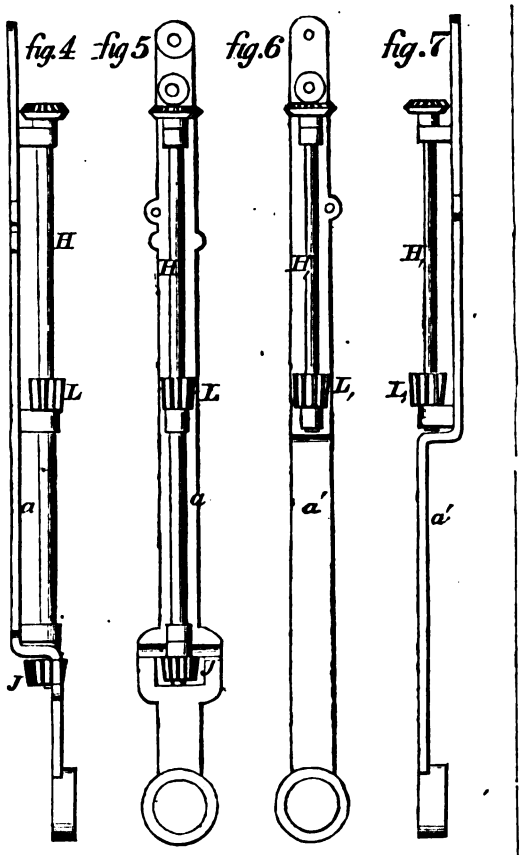

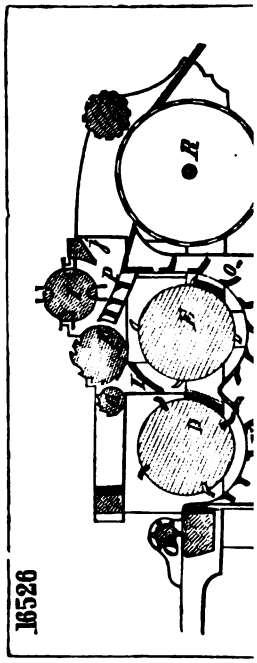

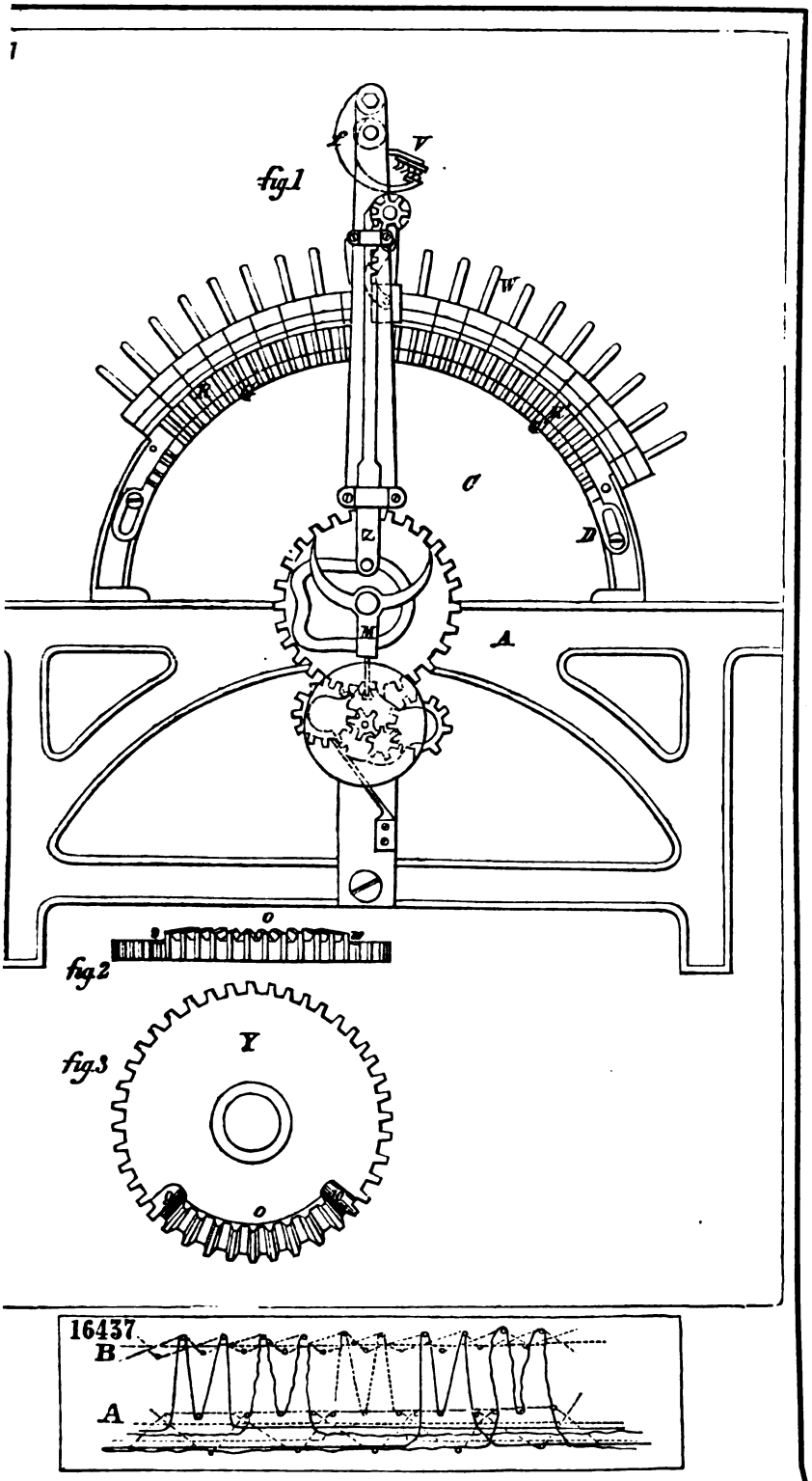
fig.1
V
W
C
D
N
M
A
fig.2
fig.3
Y
16437
B
A

17954

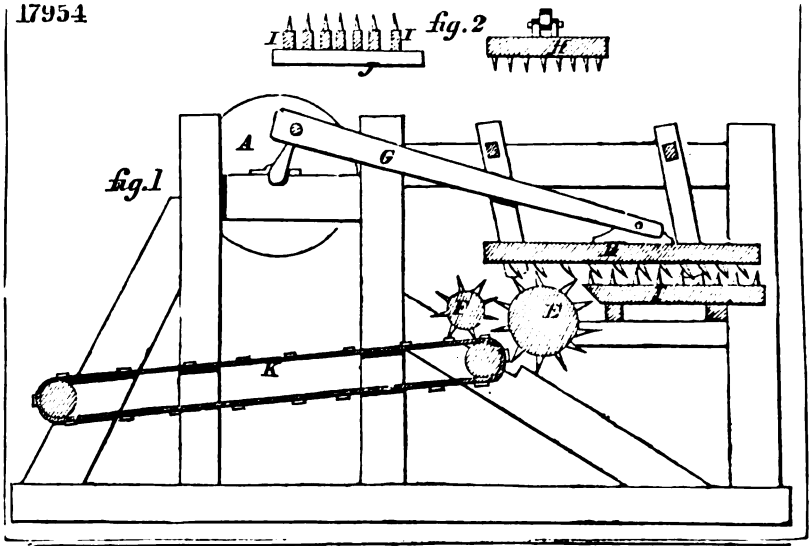

16685

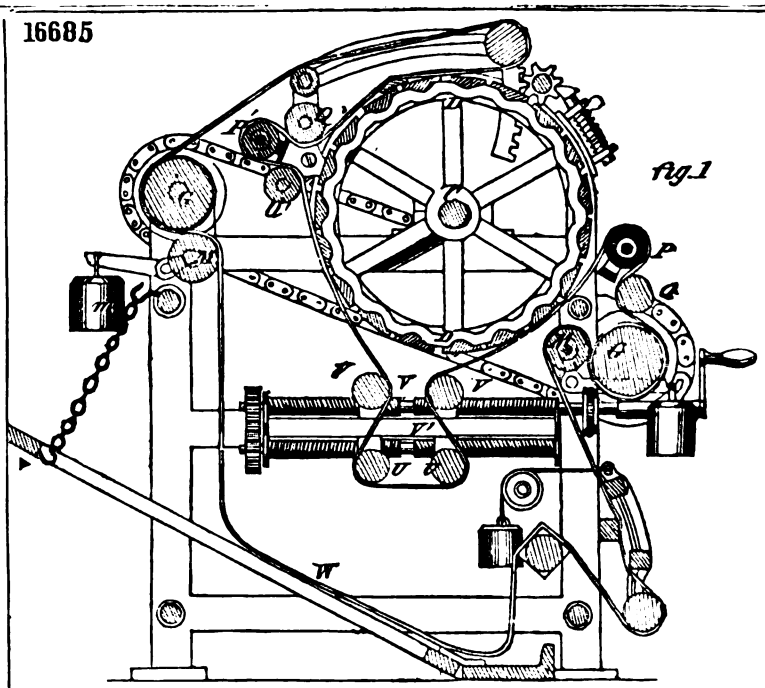

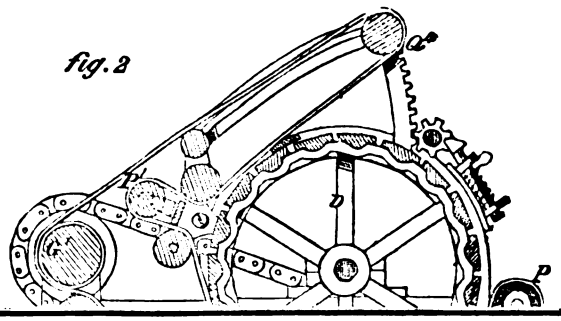

17227

fig.1

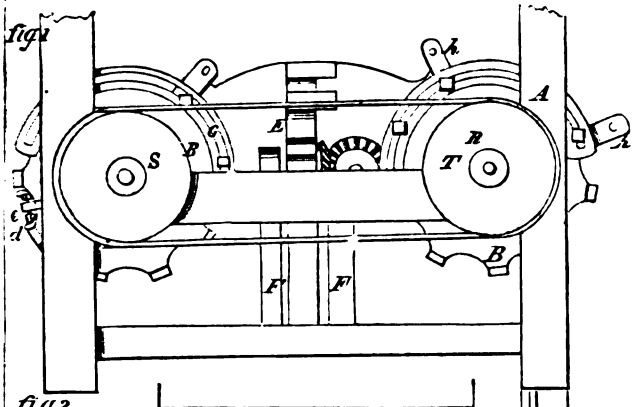

fig.2

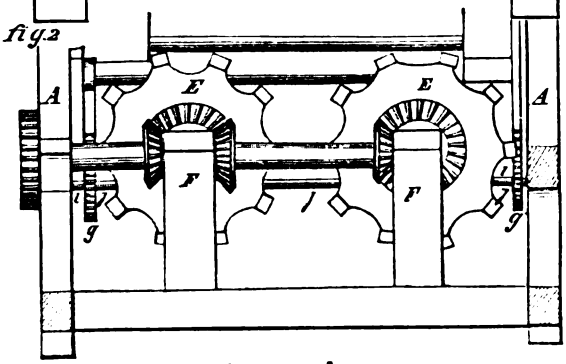

fig.3

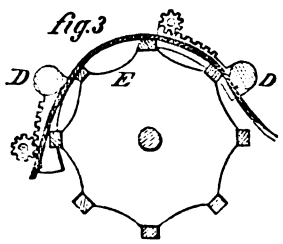

7764

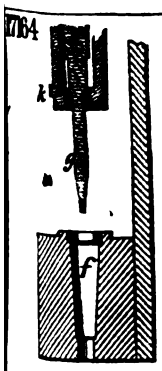

16870

fig.1

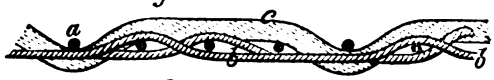

fig.2

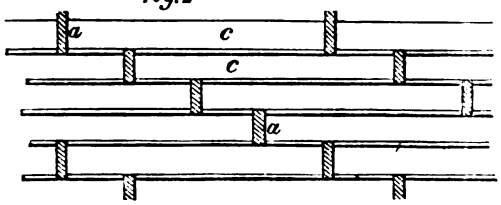

fig.3

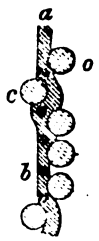

18796

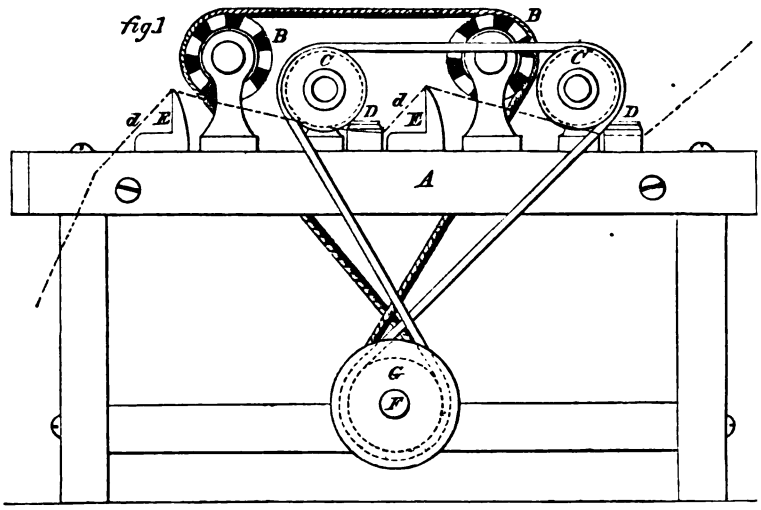

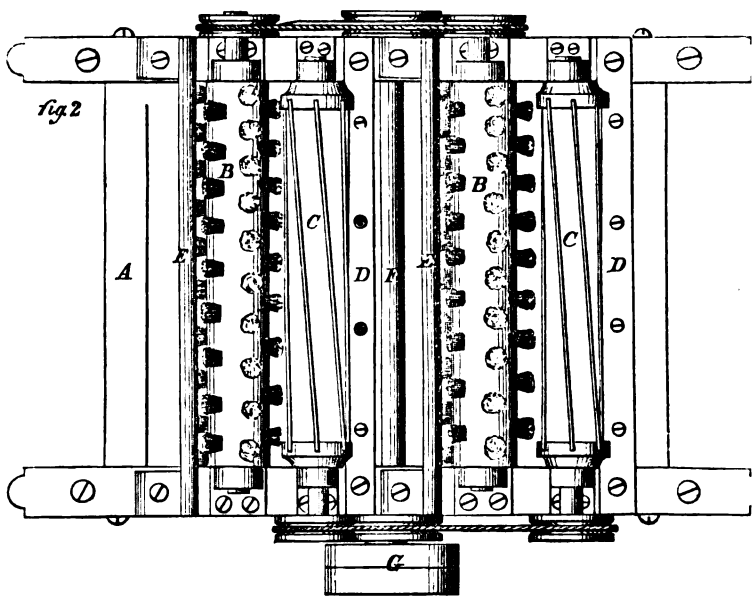

16699

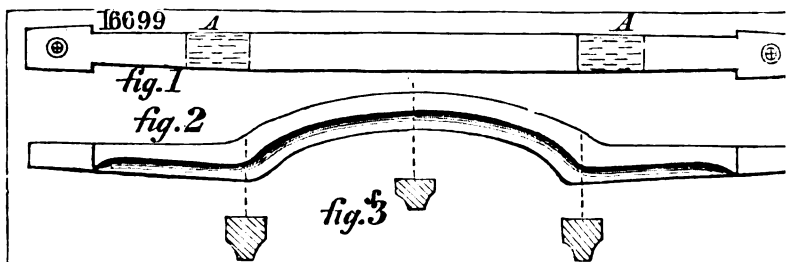

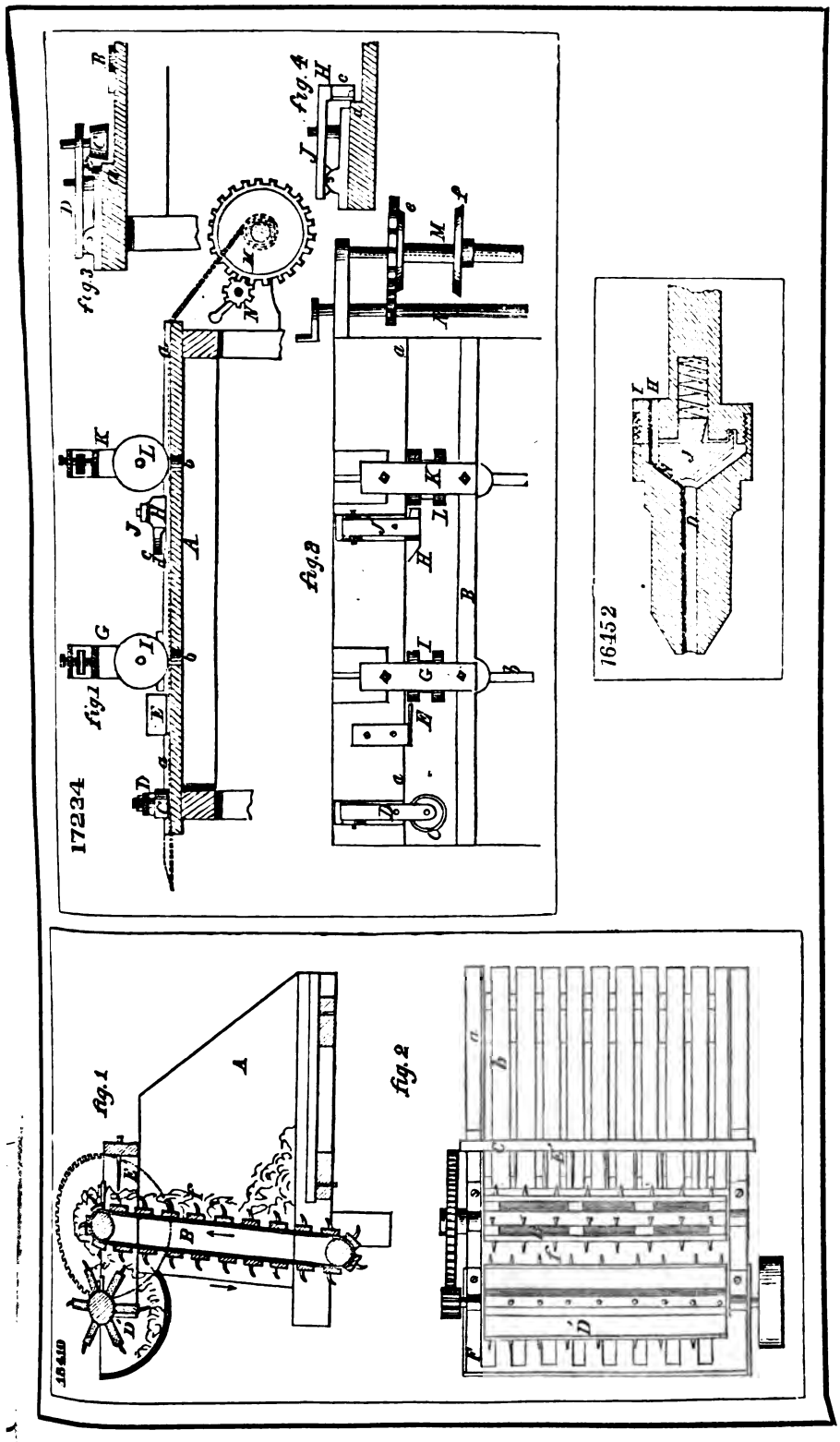
17234
fig.1
fig.2
fig.3
fig.4
16452
16410
fig.1
fig.2

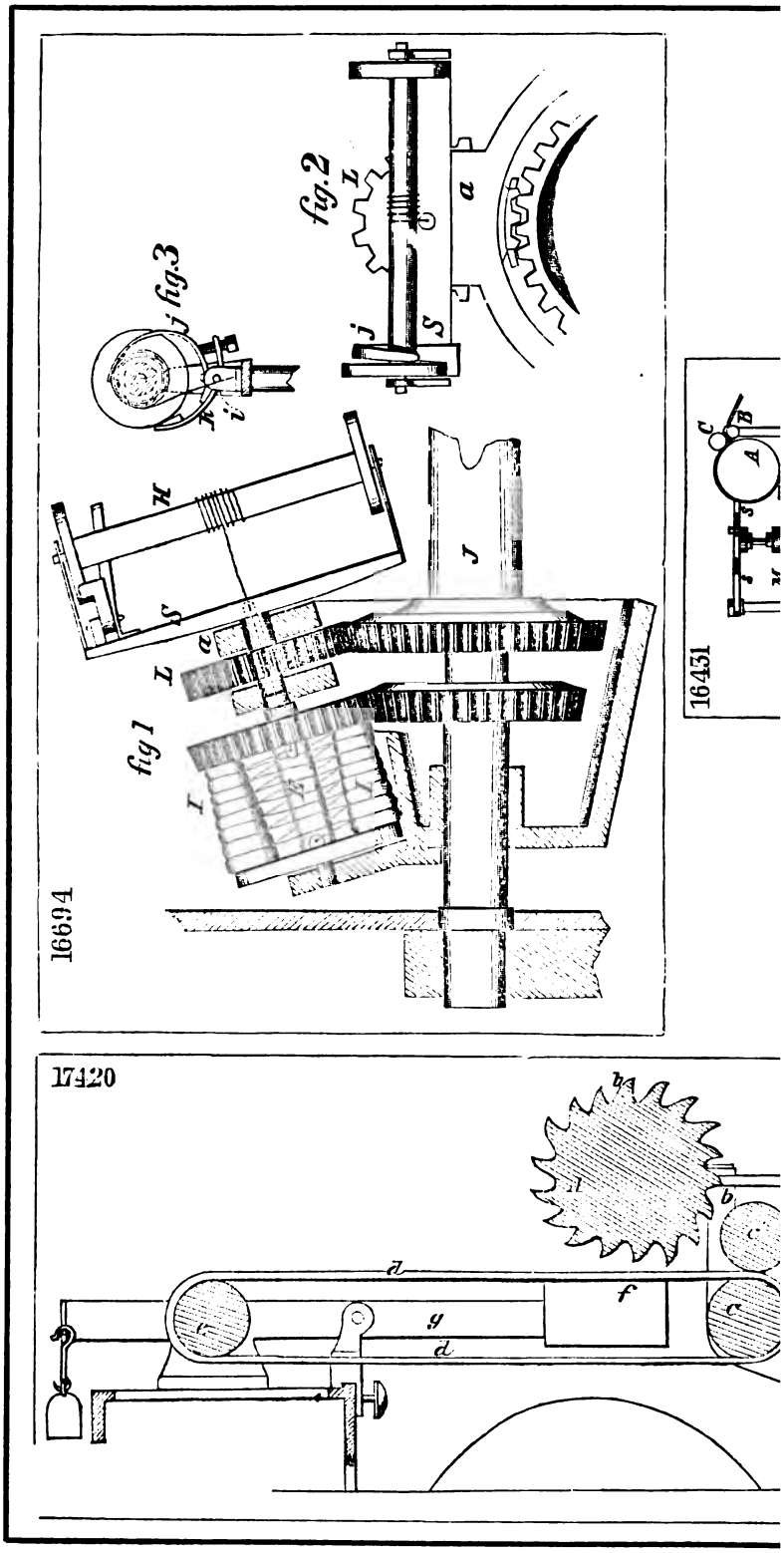
fig.2
fig.3
fig.1
16694
16431
17420

16867

fig. 2

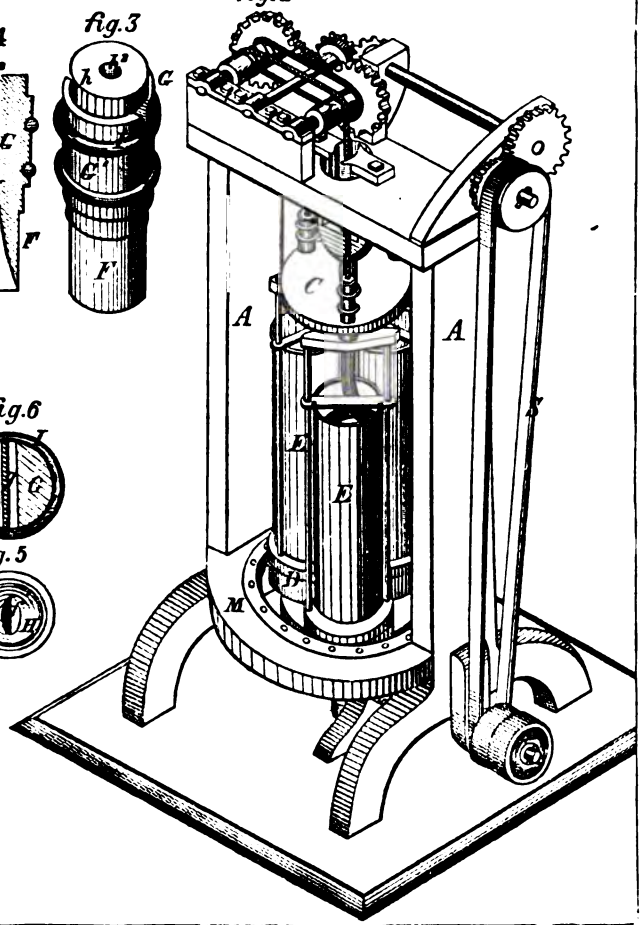

fig. 4

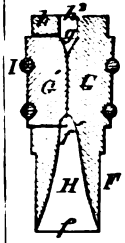

fig. 3

fig. 6

fig. 5

7806

fig. 1

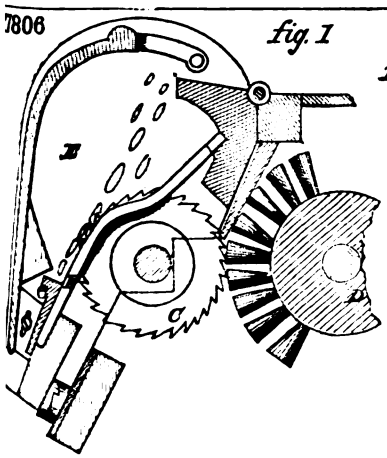

fig. 2

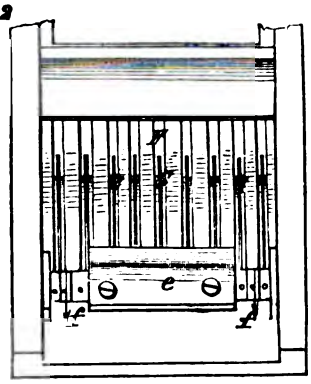

16488

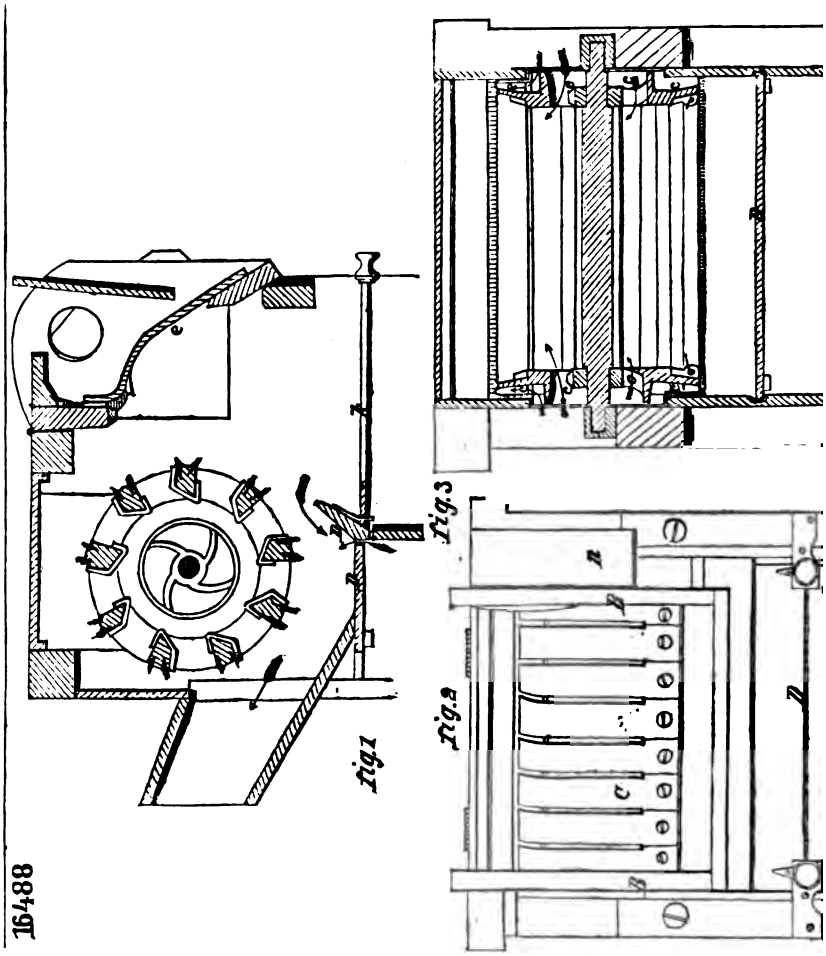

17828

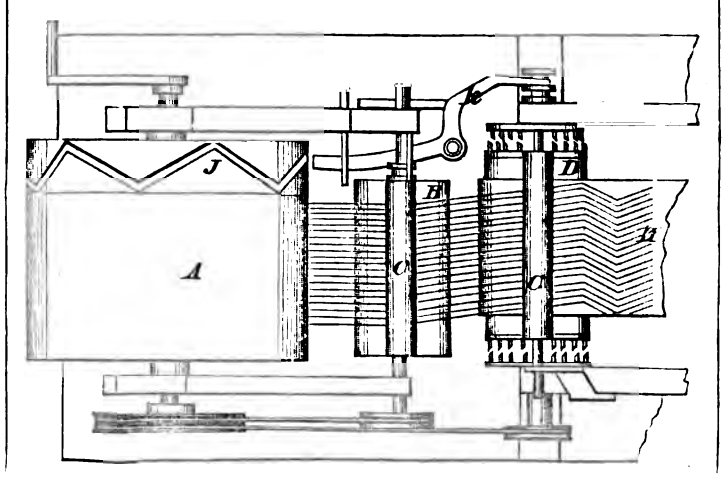

17510

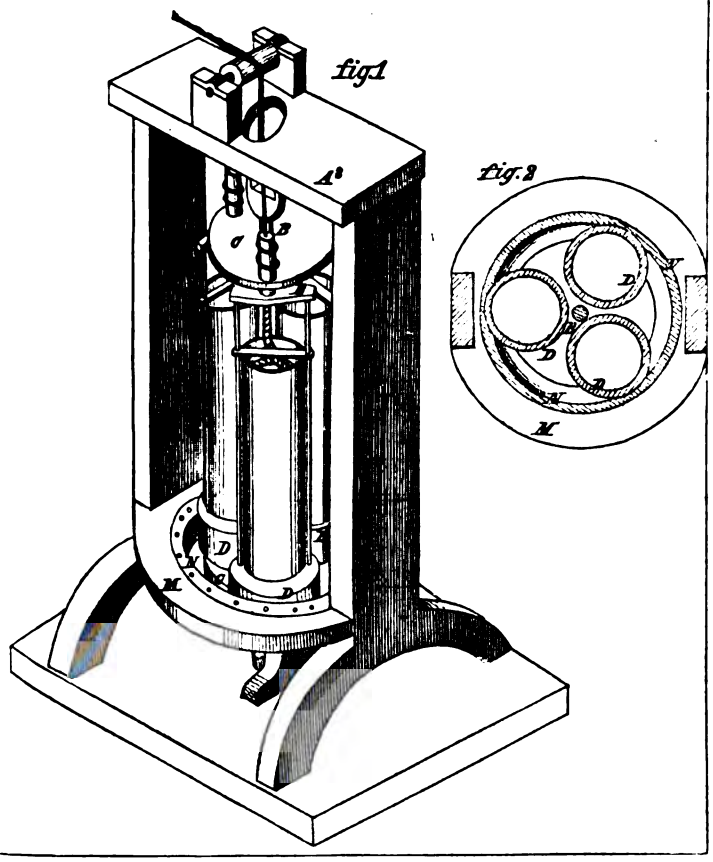

18454

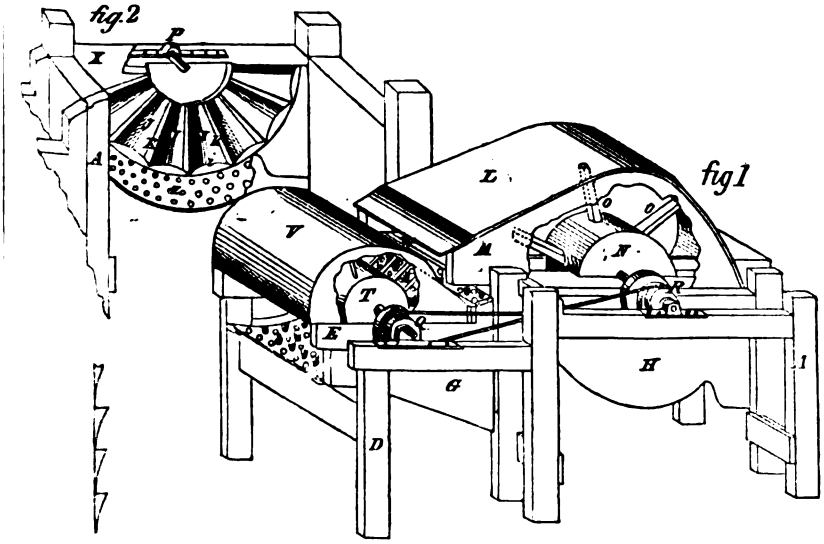

18742

fig 1

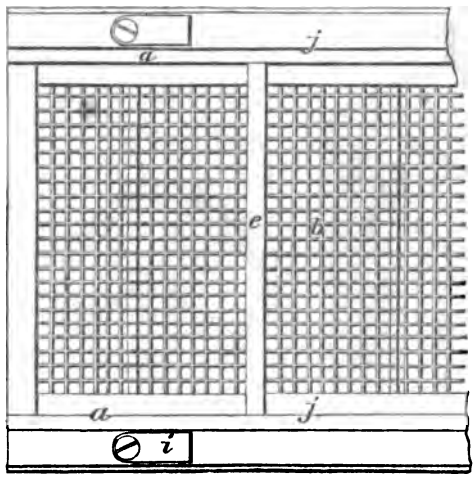

fig 2

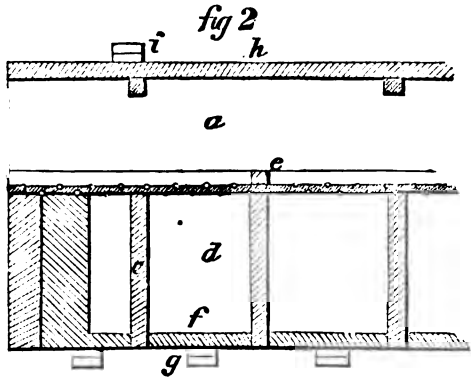

16394

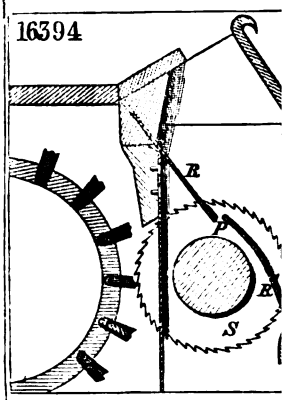

16833

fig.1

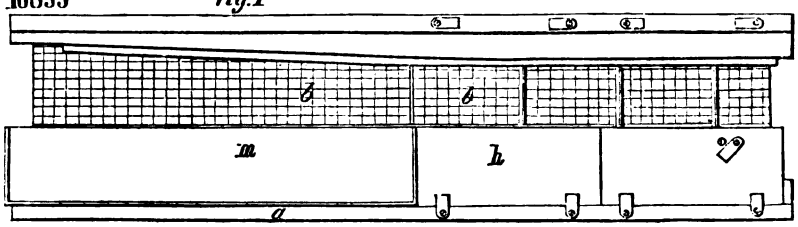

fig.2

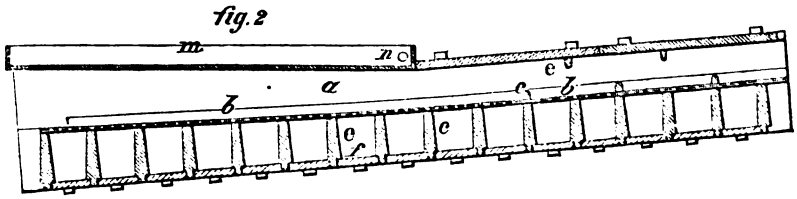

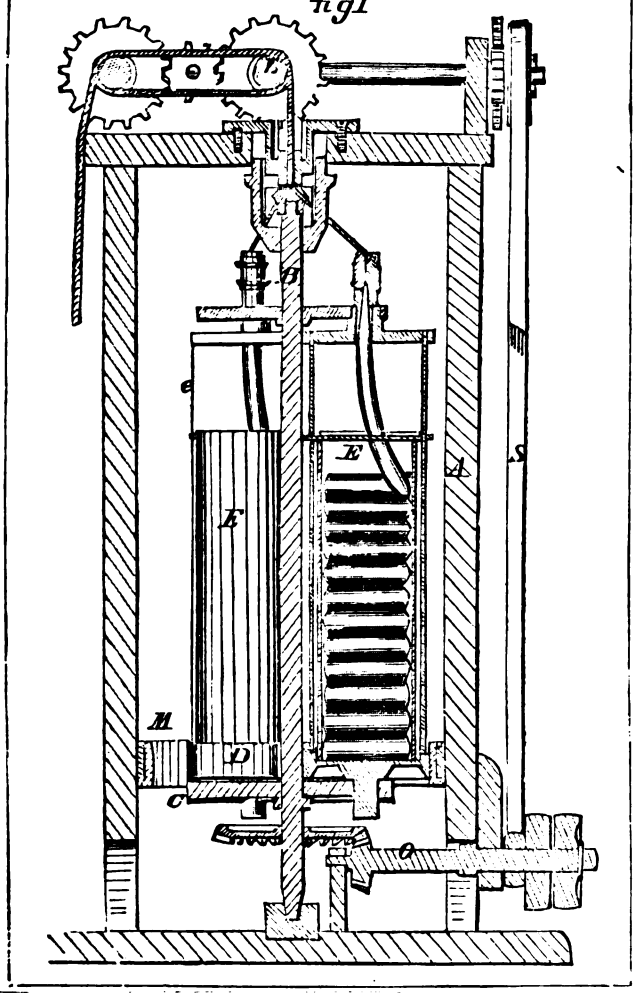
ad16867
fig1
E
E
M
D
C
A
S
O

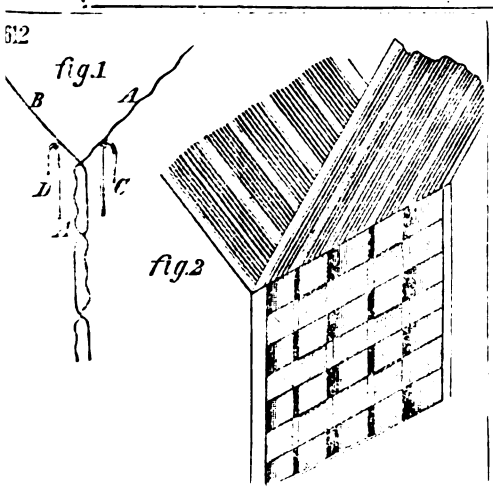
612
fig.1
B
A
D
C
fig.2

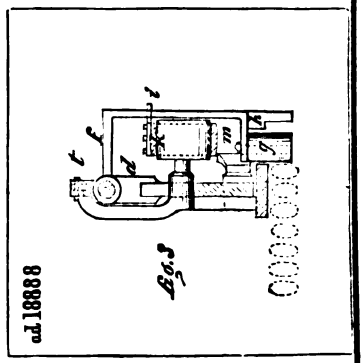
ad18888
fig.3

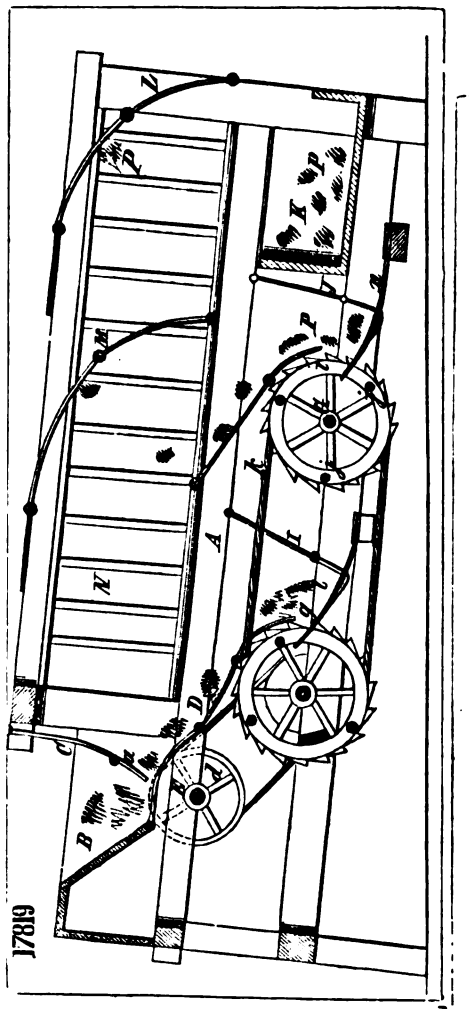
17819

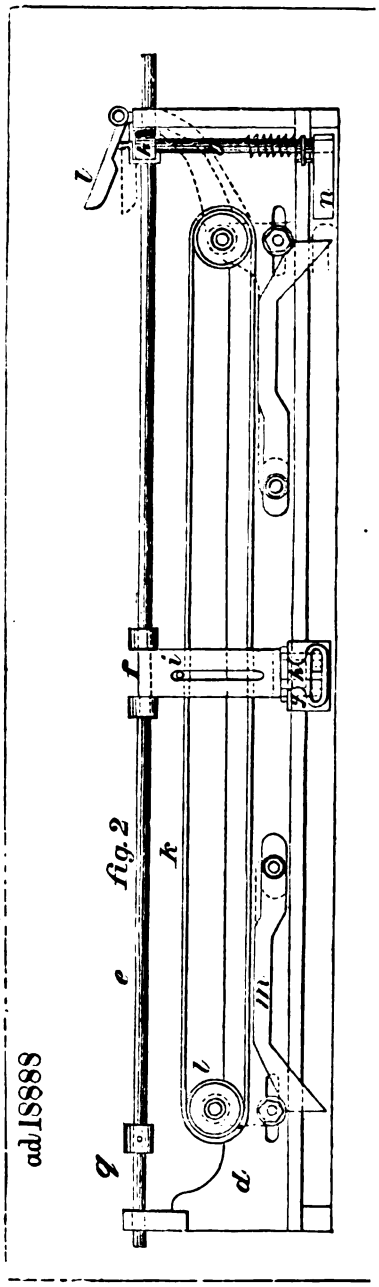
fig.2
18881

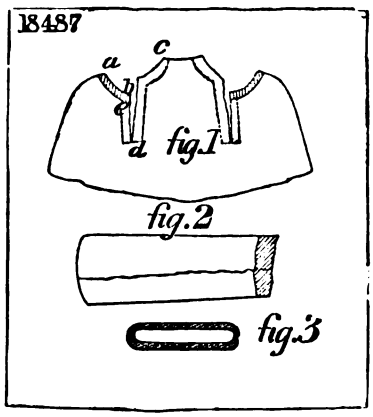
18487
fig.1
fig.2
fig.3

fig 1

16338

16588

16585

fig. 1

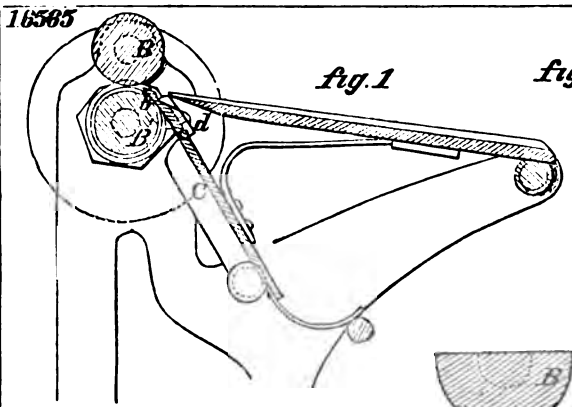

fig. 3

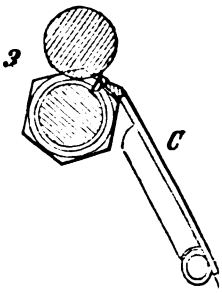

fig. 2

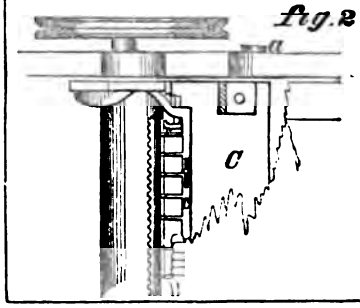

fig. 4

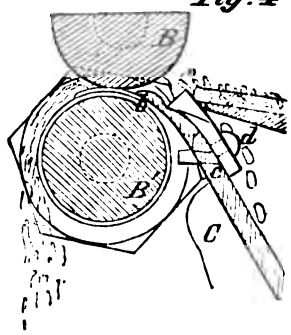

17155

fig. 1

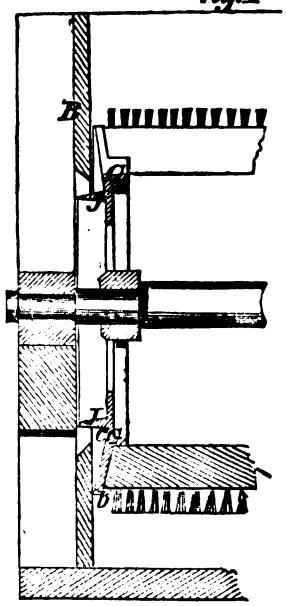

fig. 2

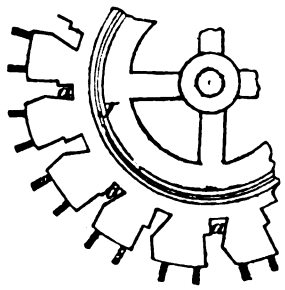

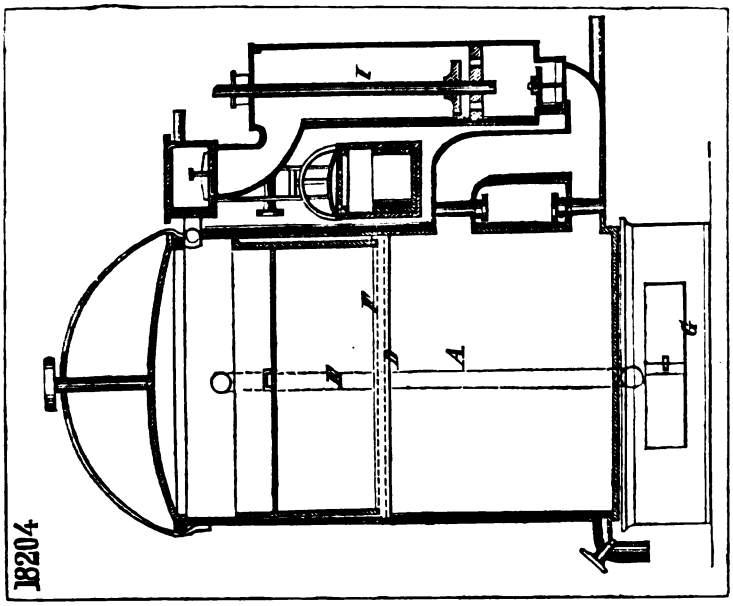
18204

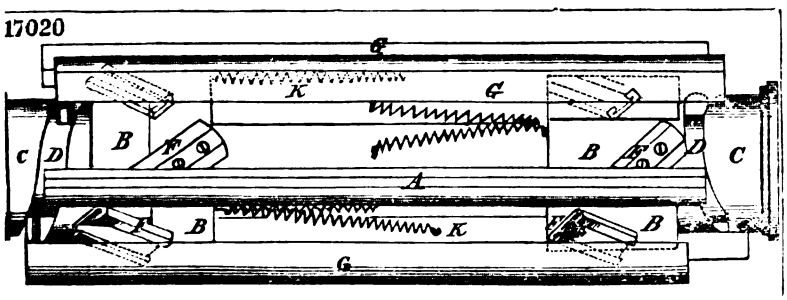
17020

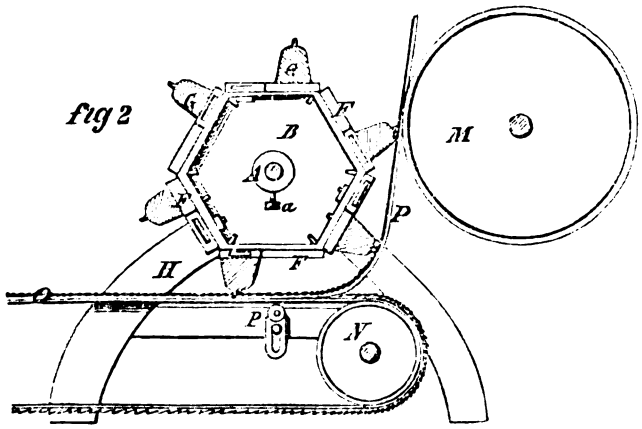
fig 2

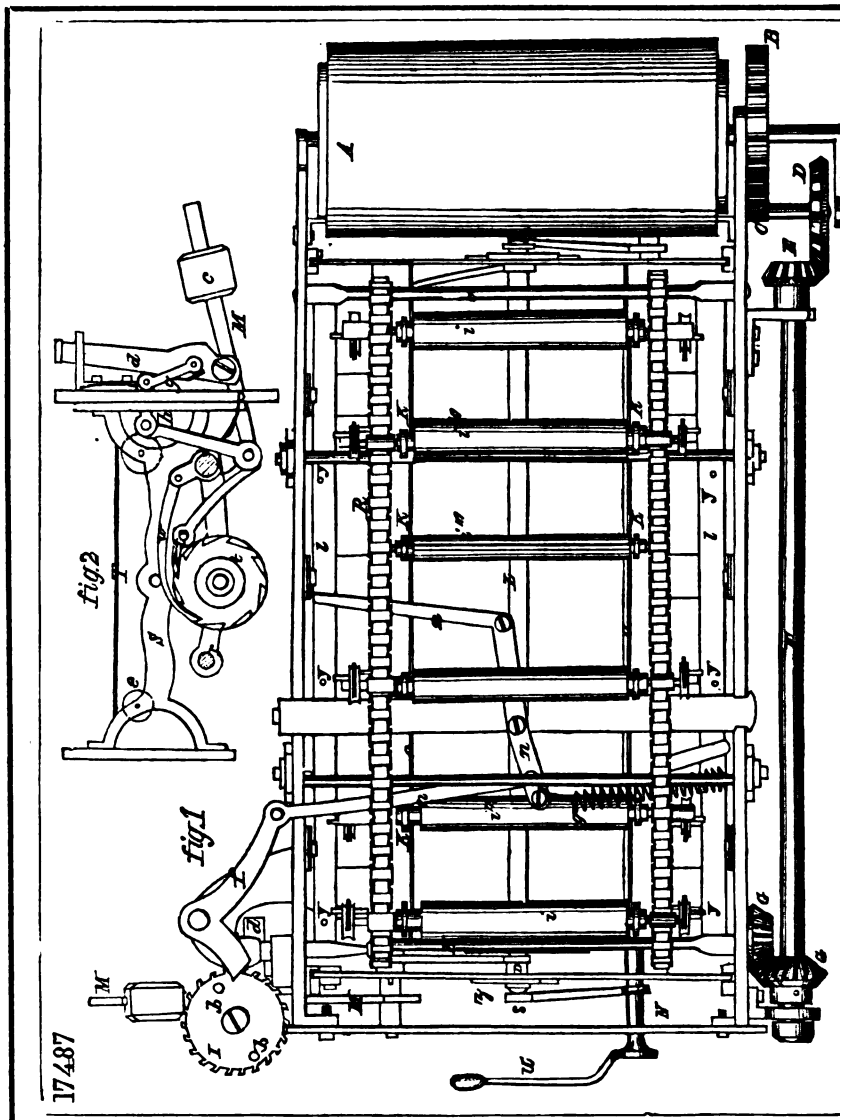
17487
fig1
fig2
16543
fig1
fig2

16865

fig1

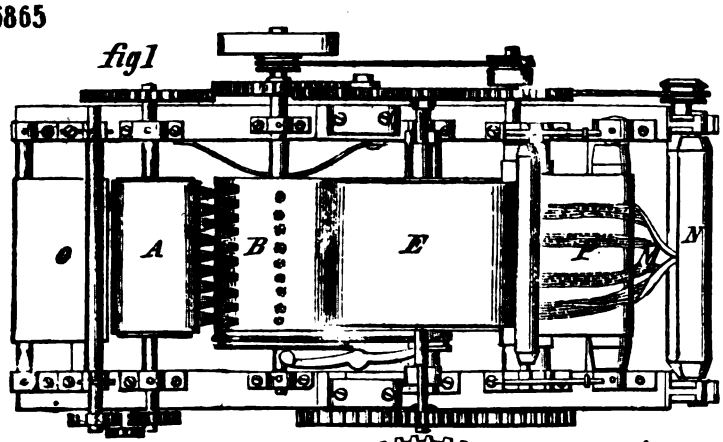

fig 3

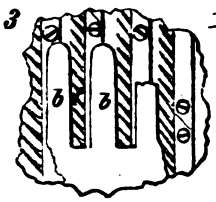

fig 2

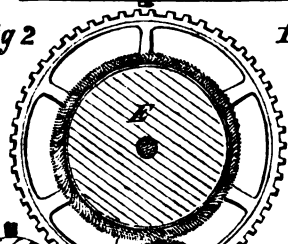

fig 4

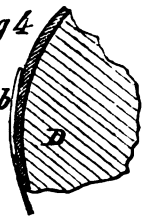

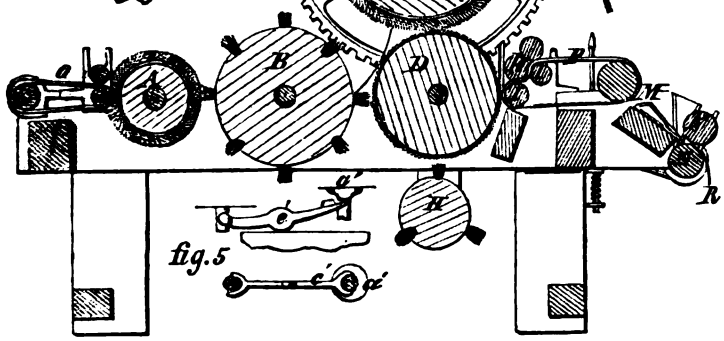

fig.5

17033

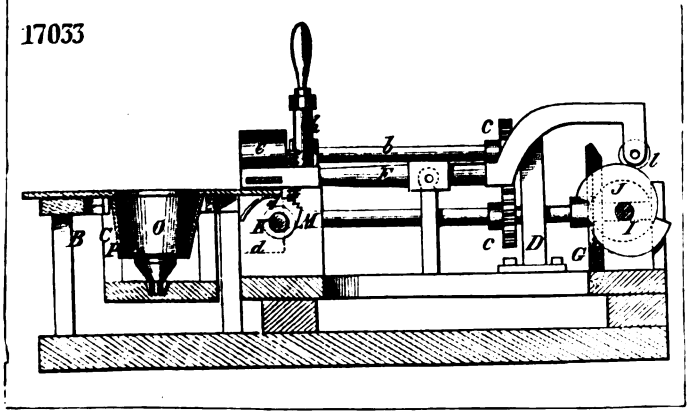

16977

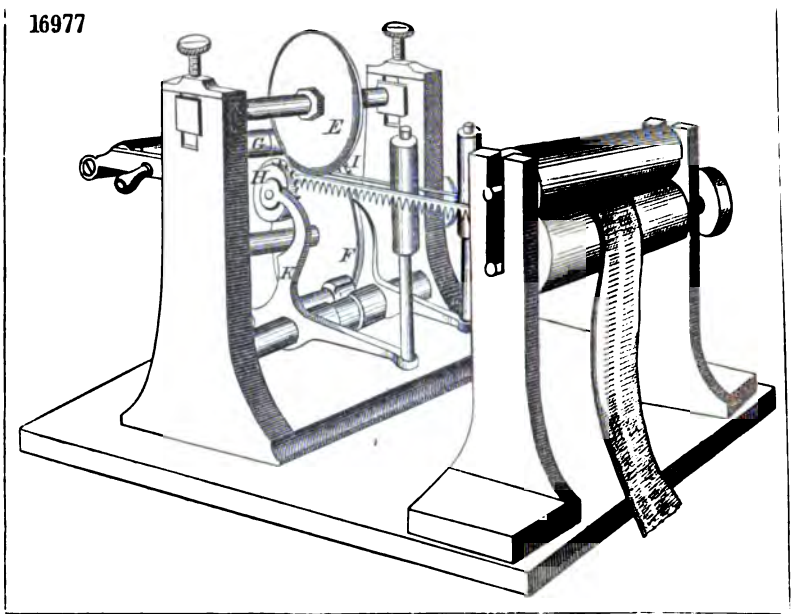

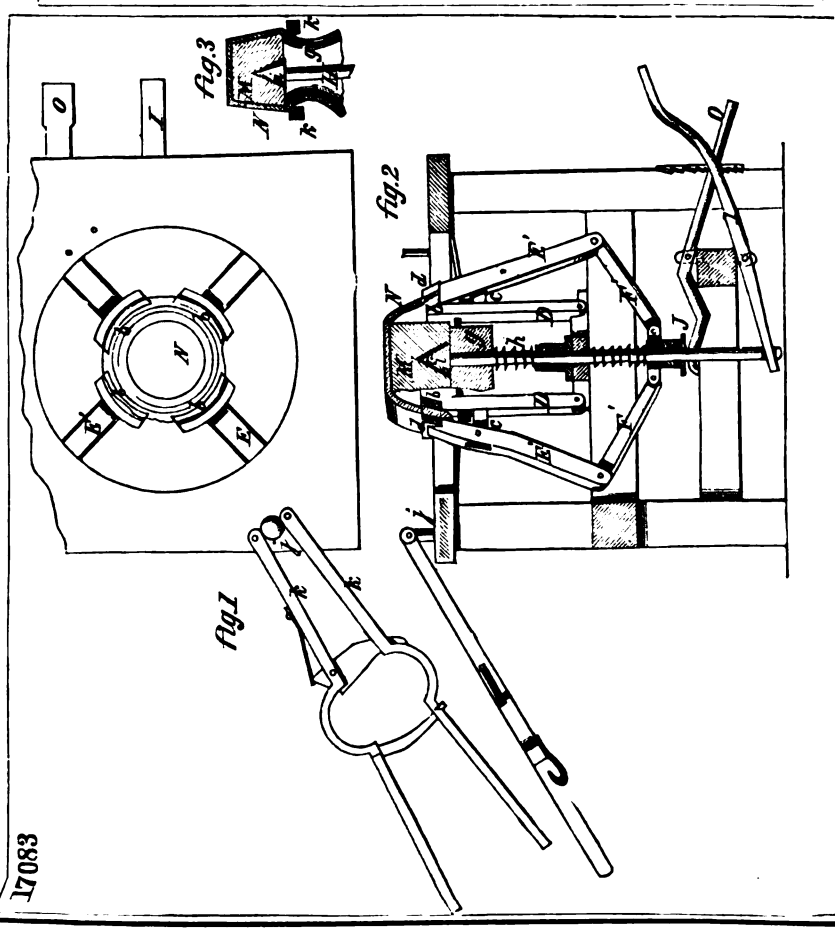

17083

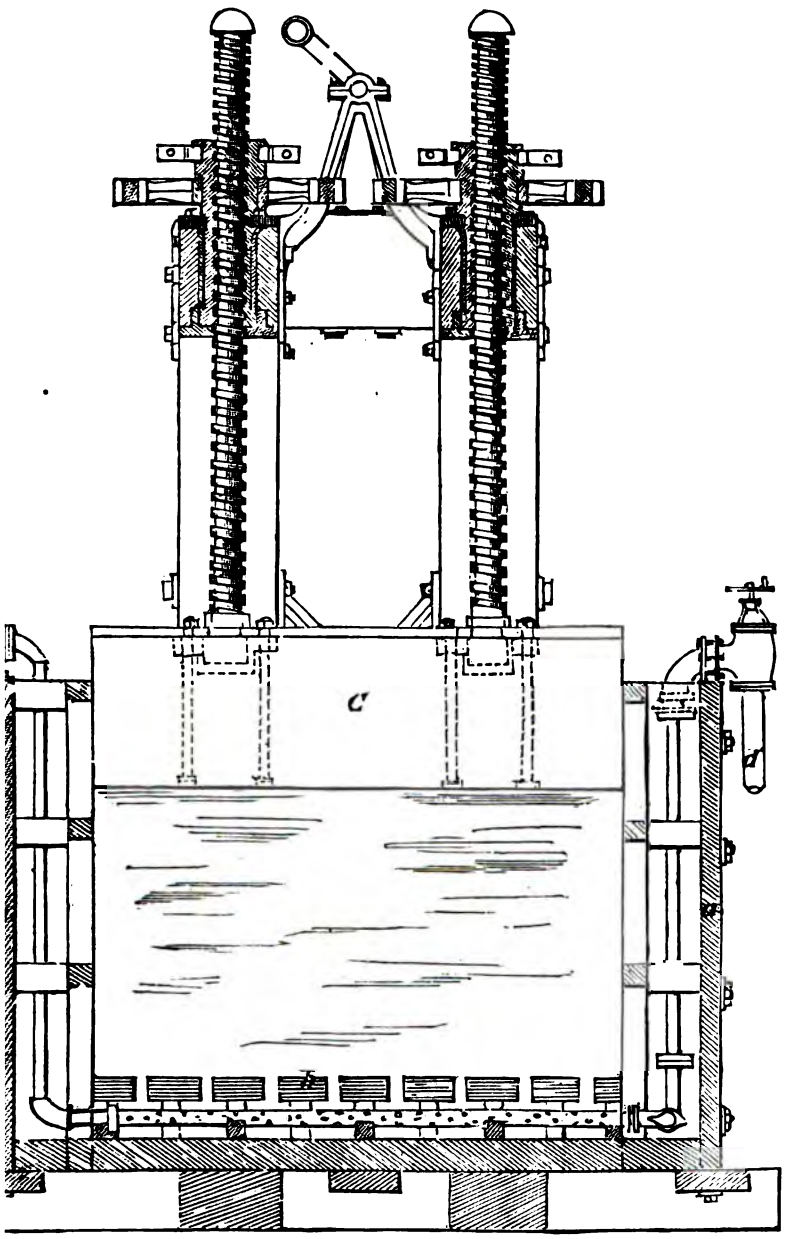

16994

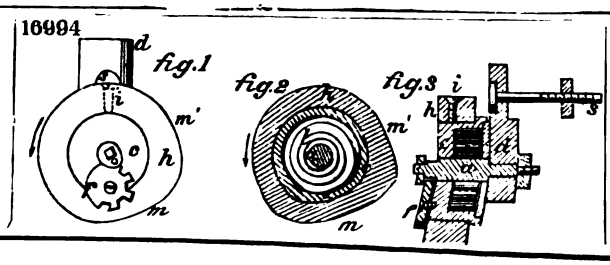

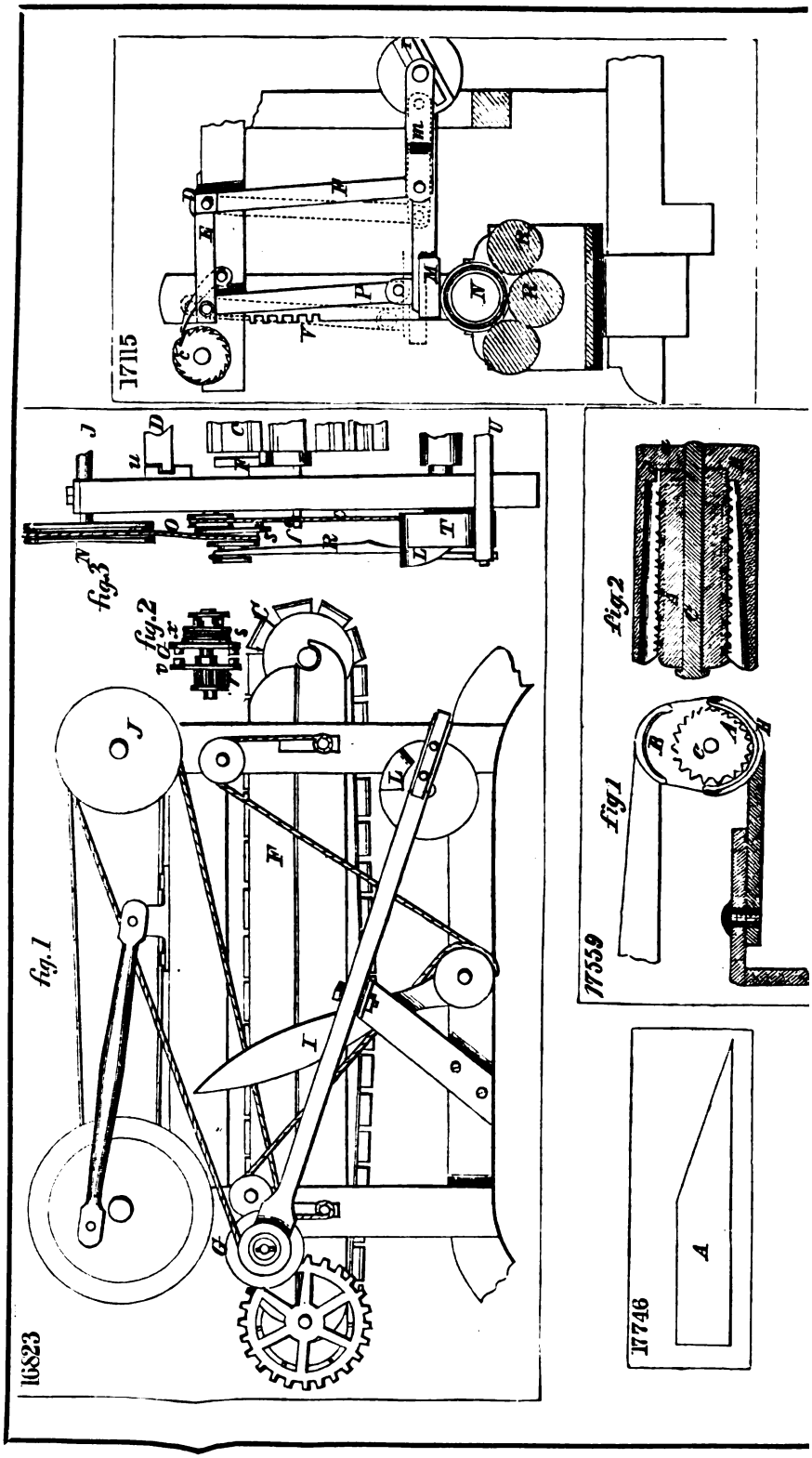
17115
16823
fig. 1
fig. 2
fig. 3
17559
fig 1
Fig 2
17746
A

18316

fig.1

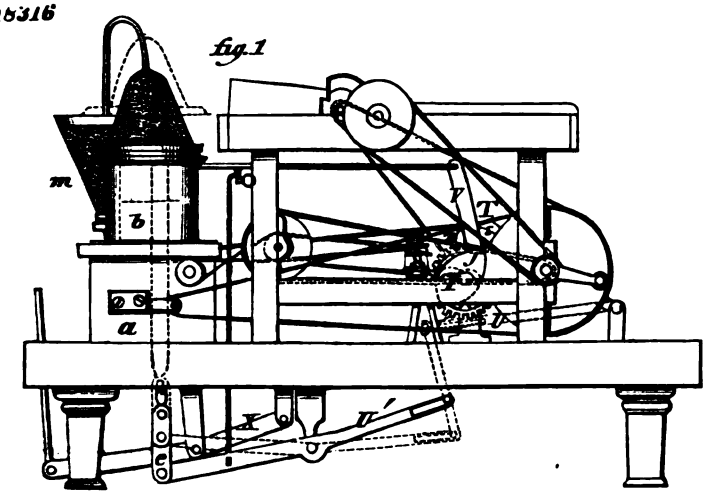

16

fig.2

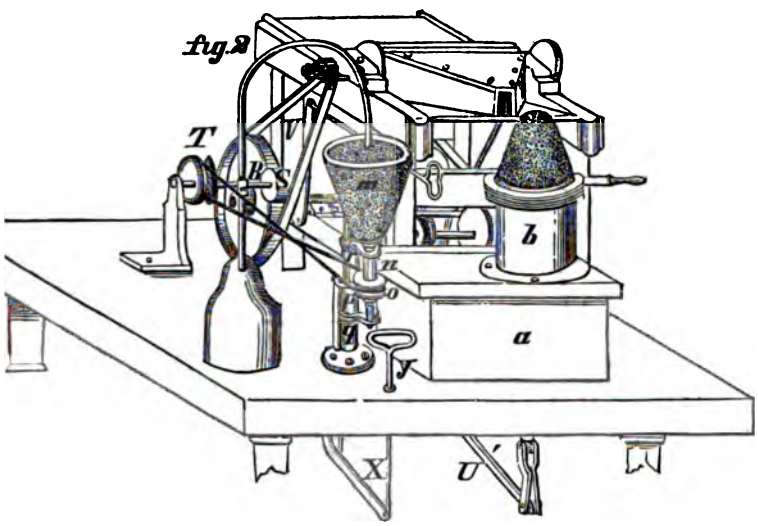

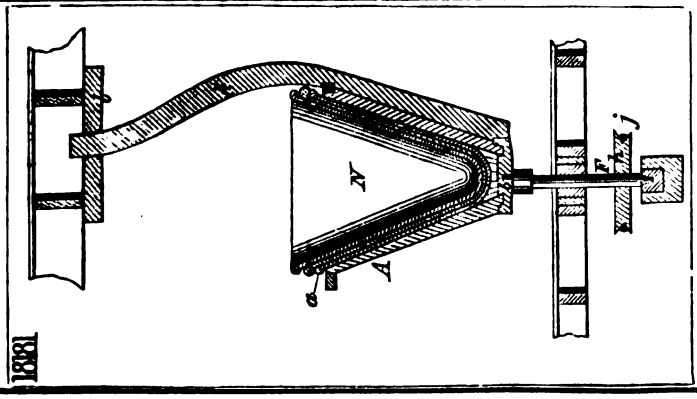

18381

17518

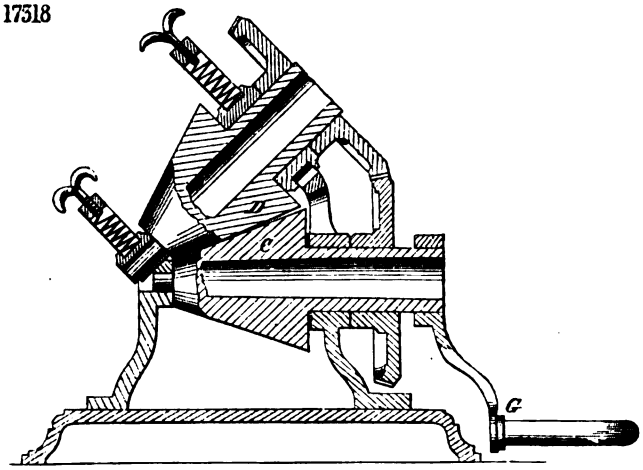

16365

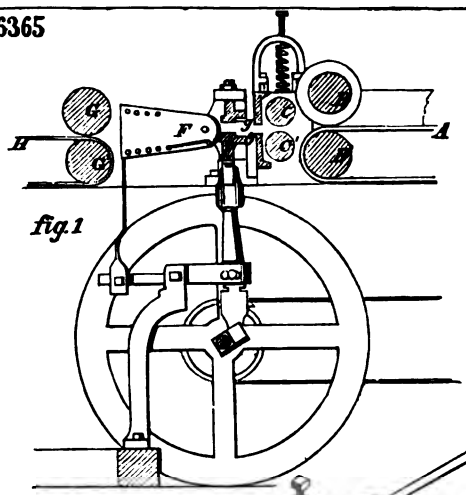

fig.1

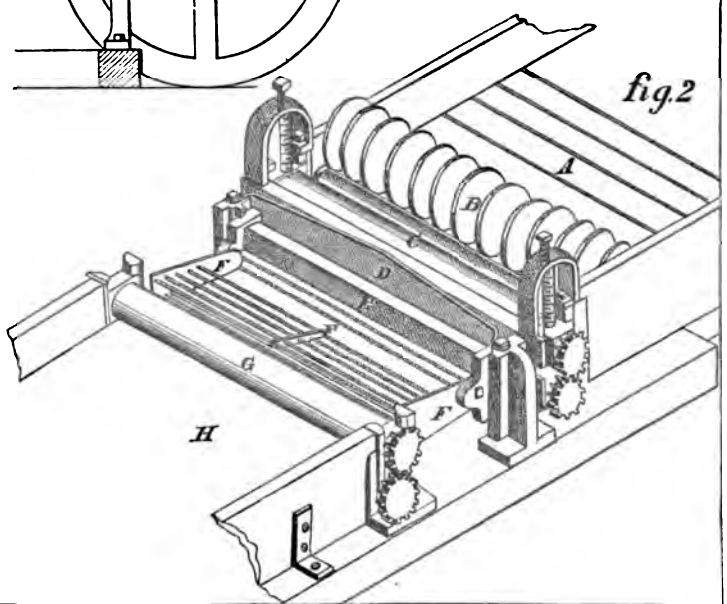

fig.2

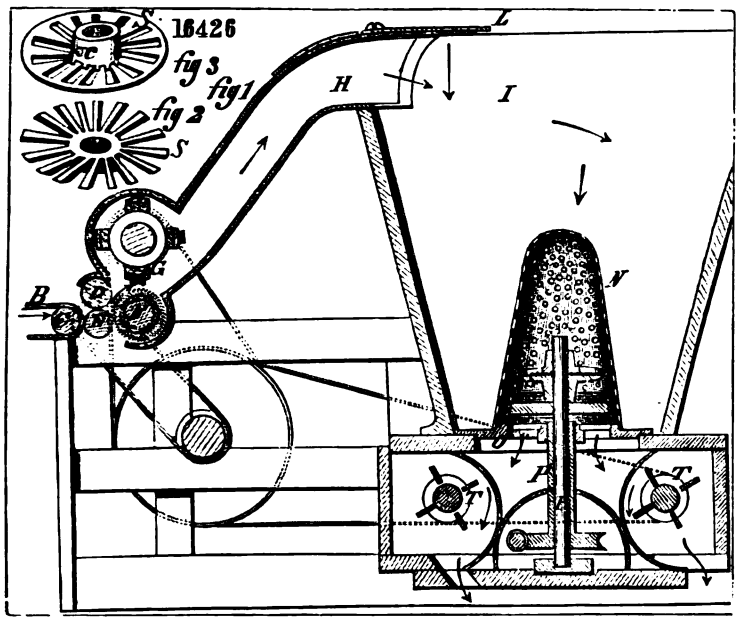
16426
fig 3
fig 1
fig 2
S
H
I
L
B
N
P
T

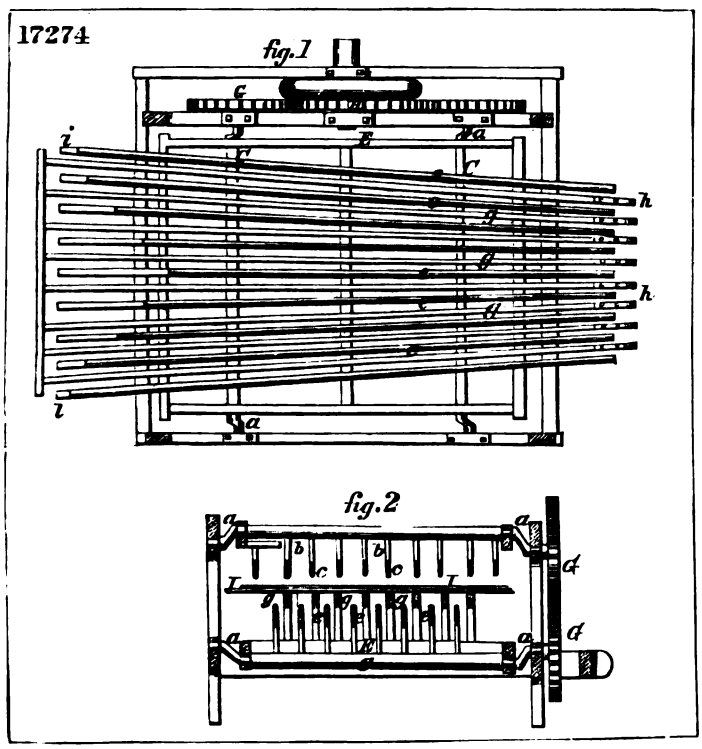
17274
fig.1
G
E
a
i
h
fig.2
b
c
d
L

17015

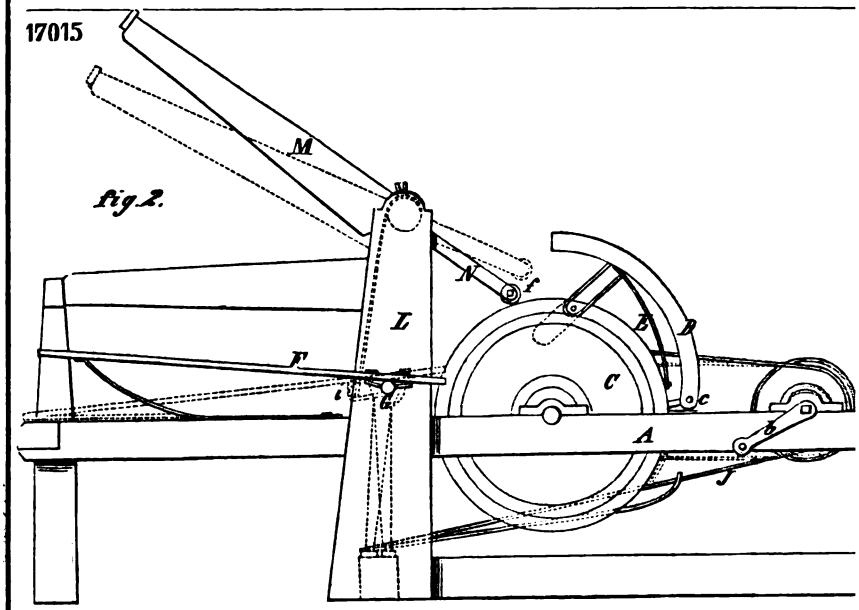

fig. 2.

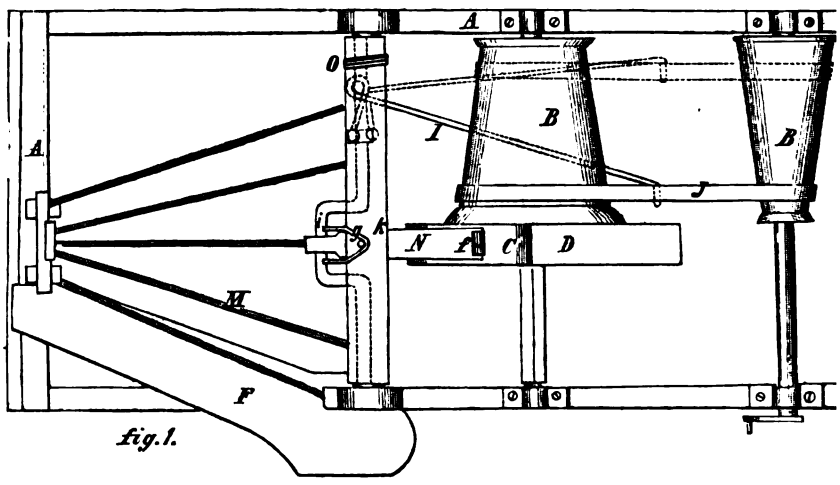

fig. 1.

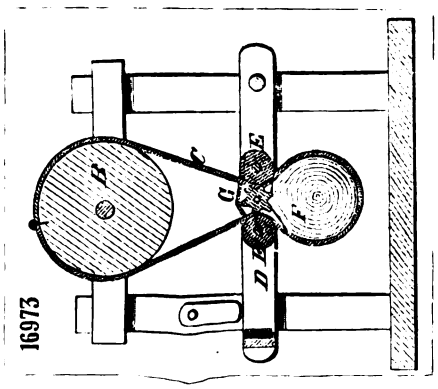

16973

18121

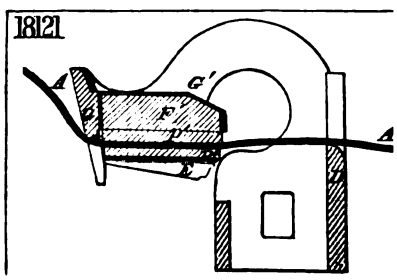

092

fig.1

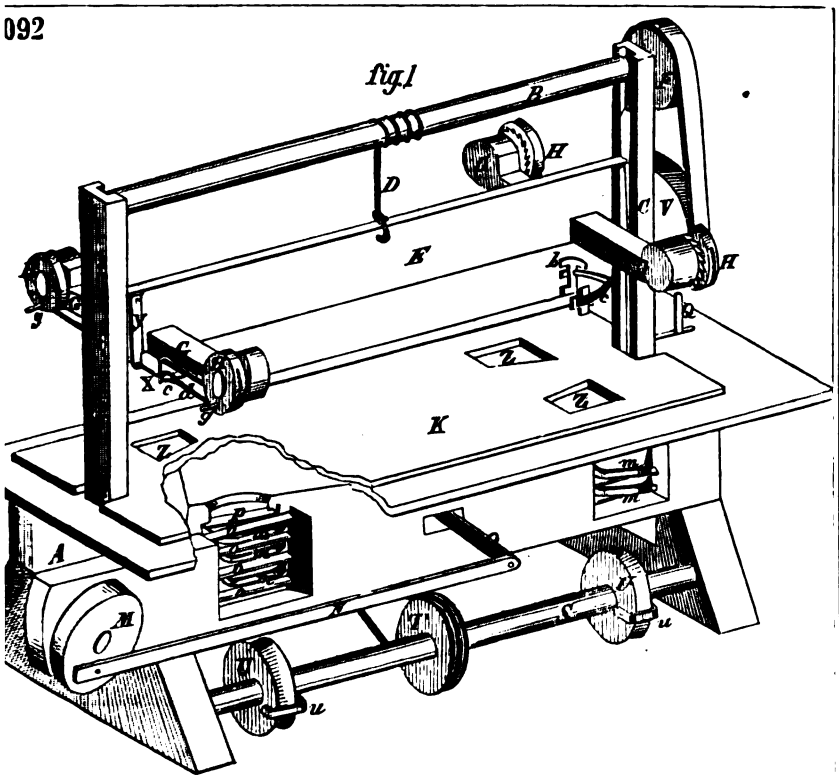

fig. 2

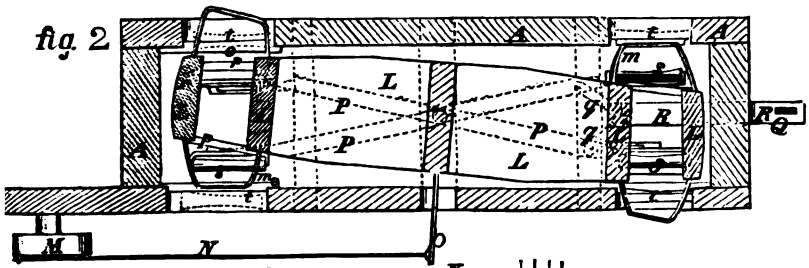

fig.4

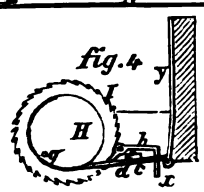

fig.3

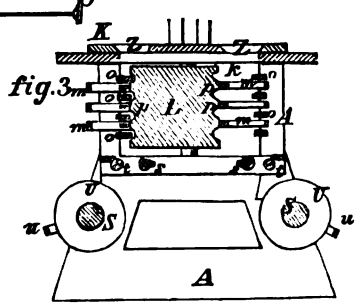

18034

fig. 1

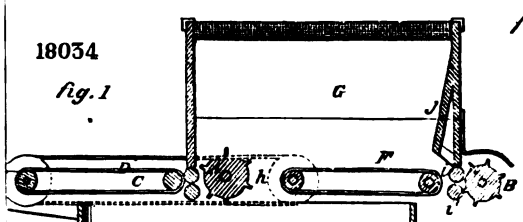

fig. 2

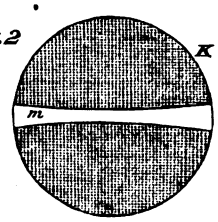

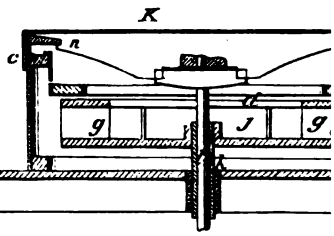

18303

fig. 1

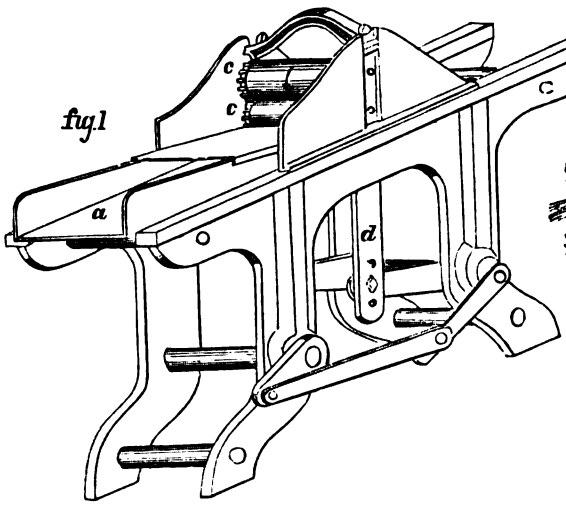

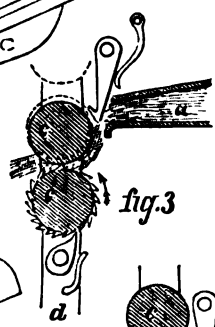

fig. 3

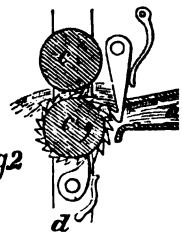

fig. 2

17900

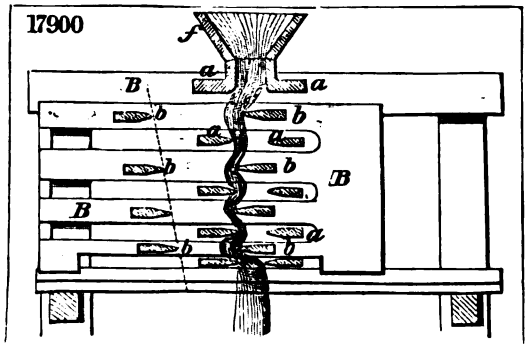

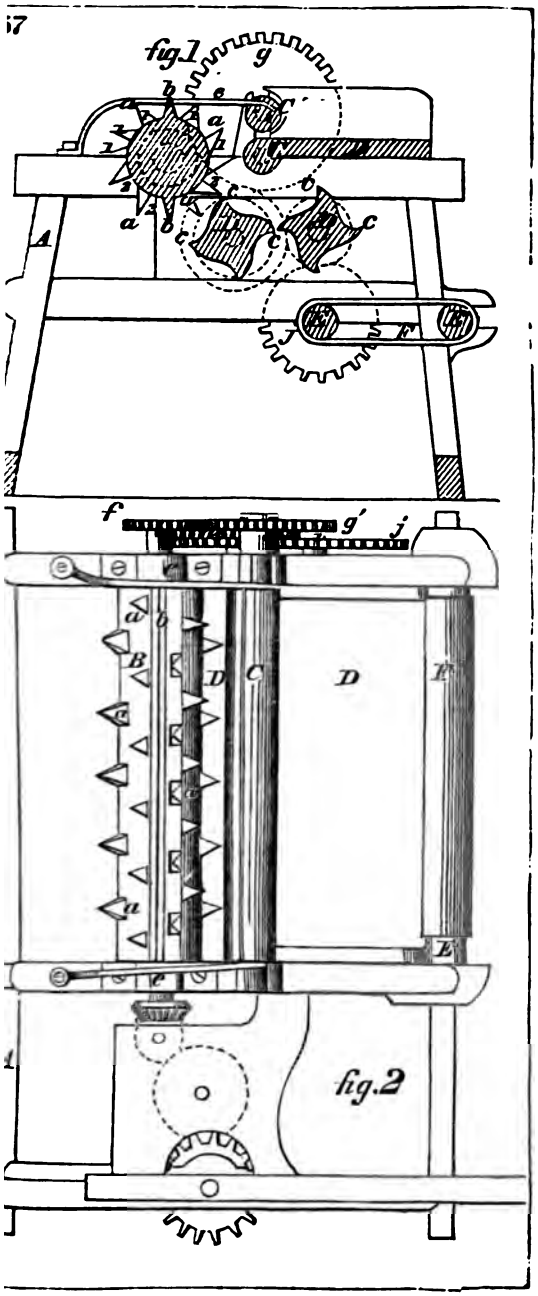

17468

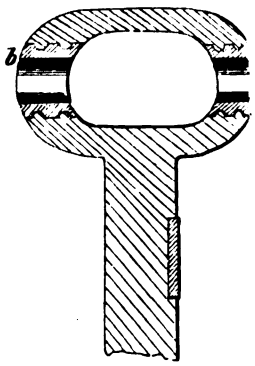

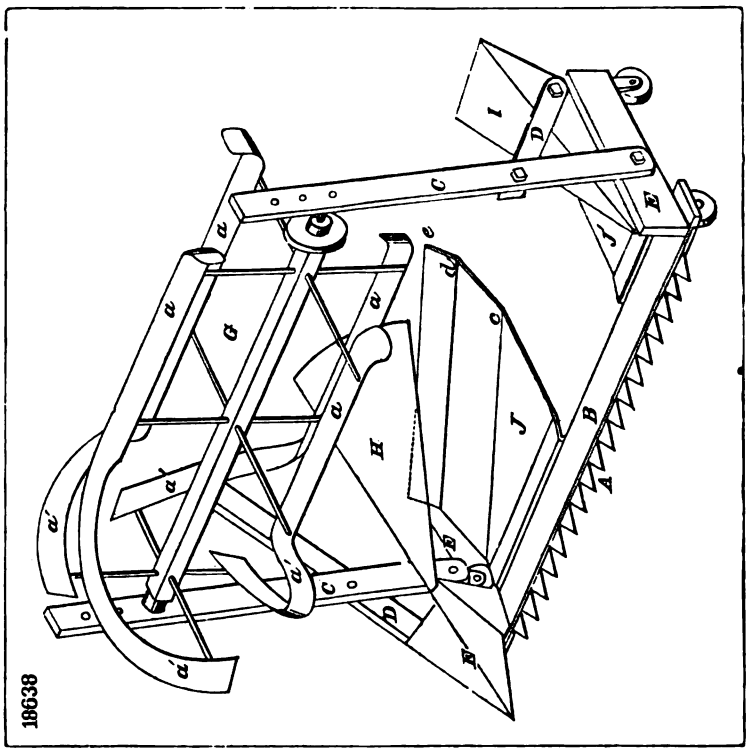
18638

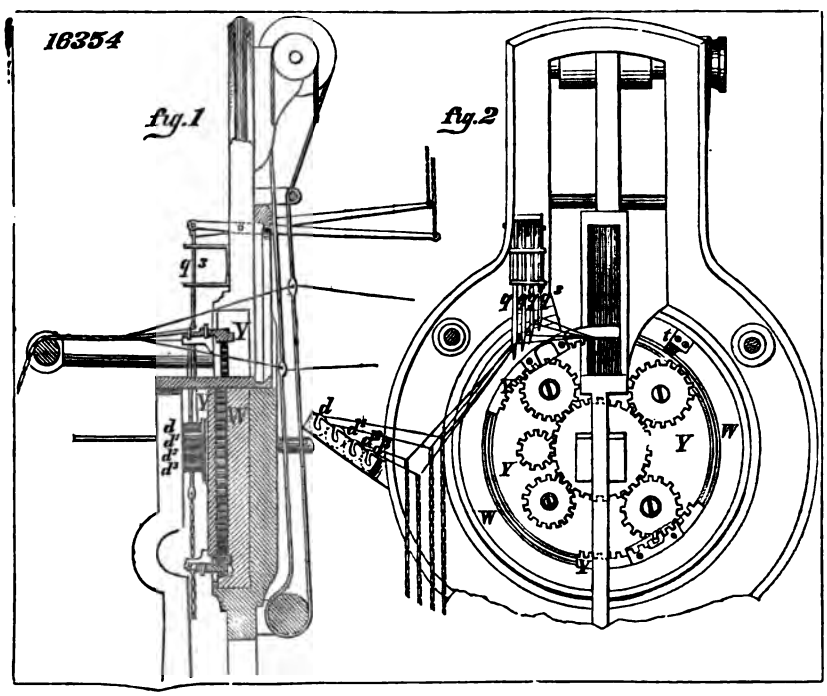
16354
Fig. 1
Fig. 2

17795

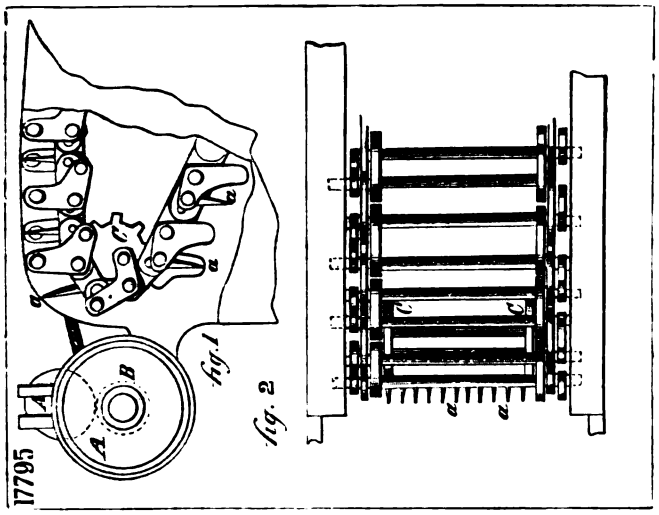

16405

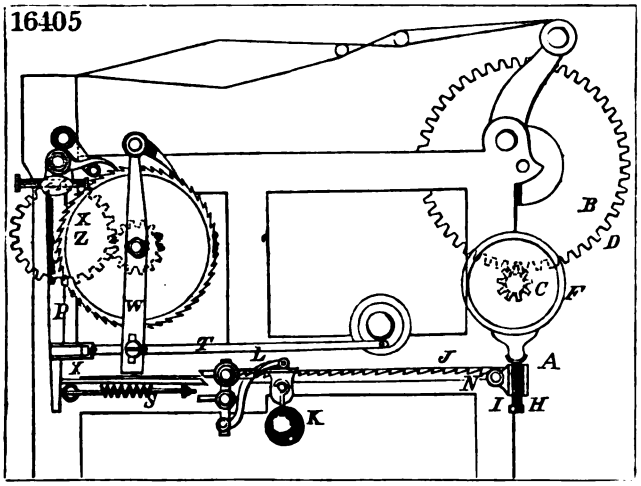

17375

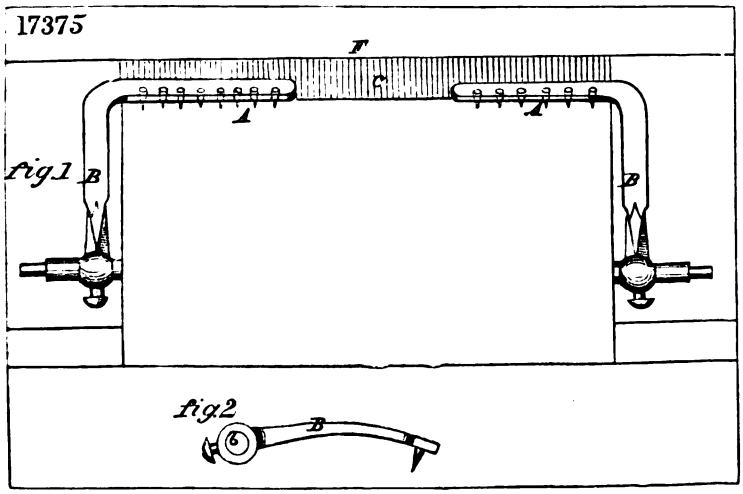

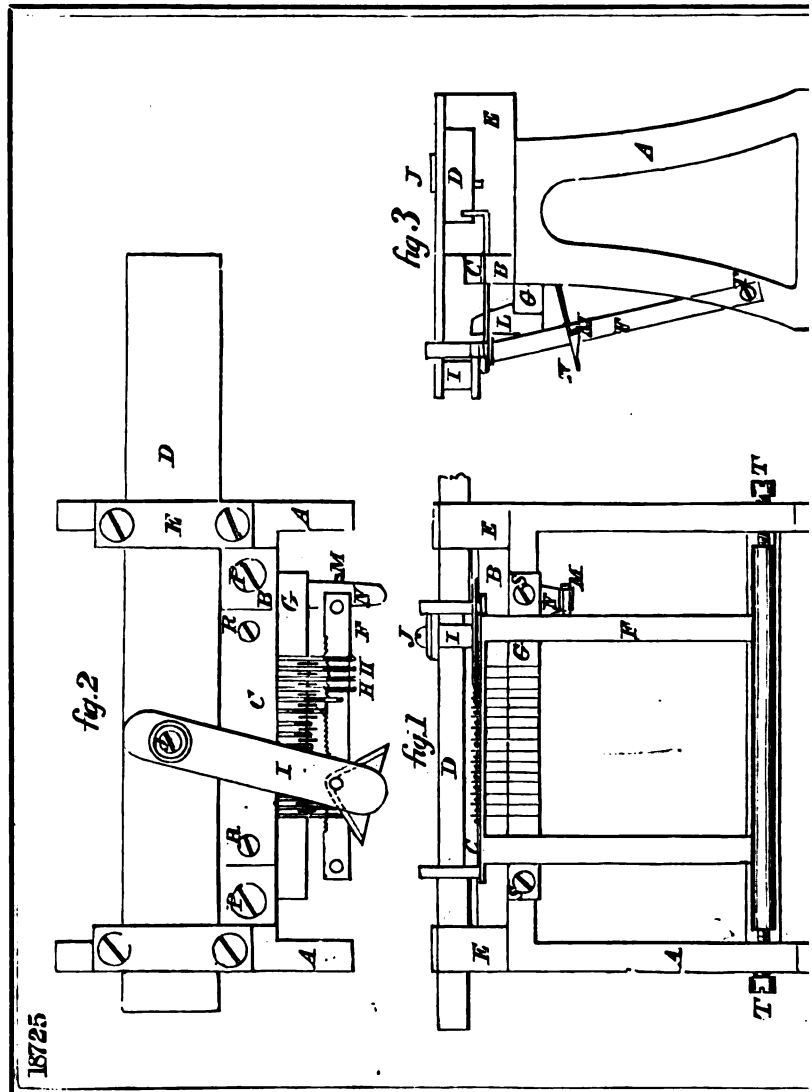
fig.3
fig.2
fig.1
18725
16375
fig.1
fig.2

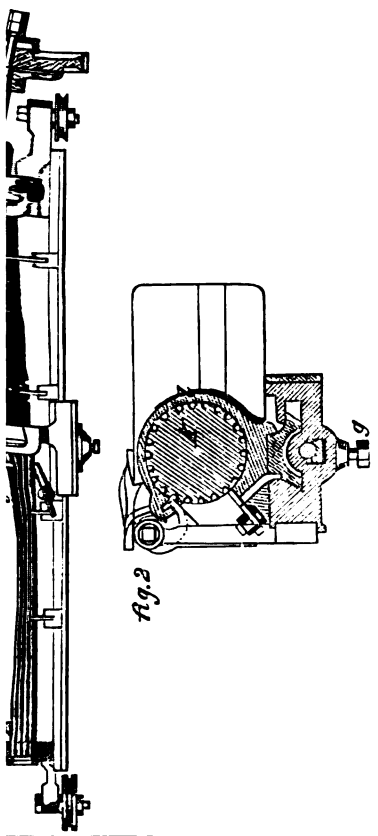

fig. 2

18792

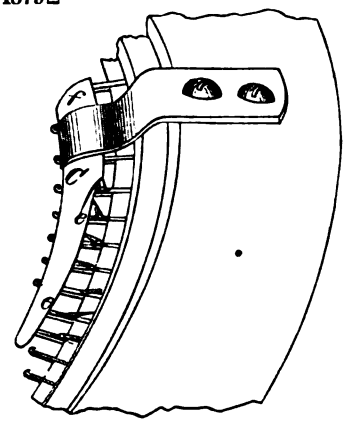

ad 17353

fig. 3

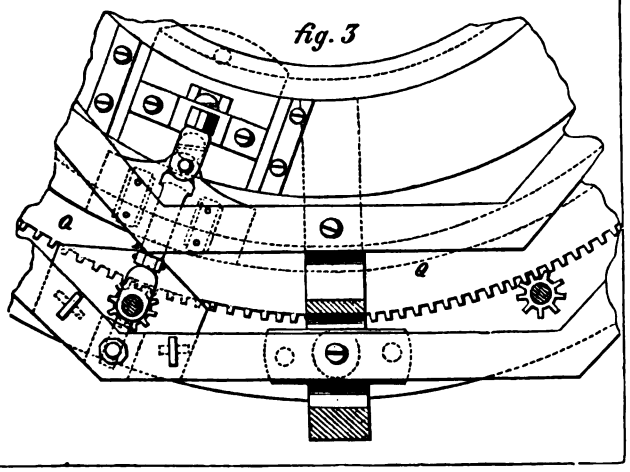

17353

fig. 1

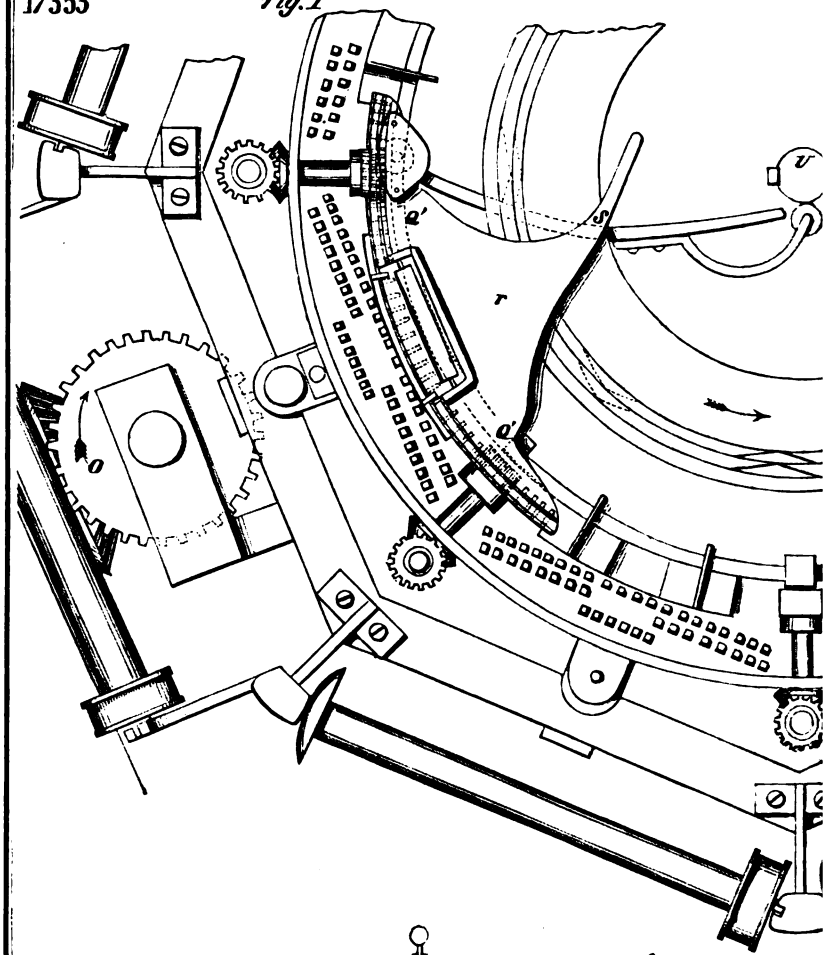

fig. 5

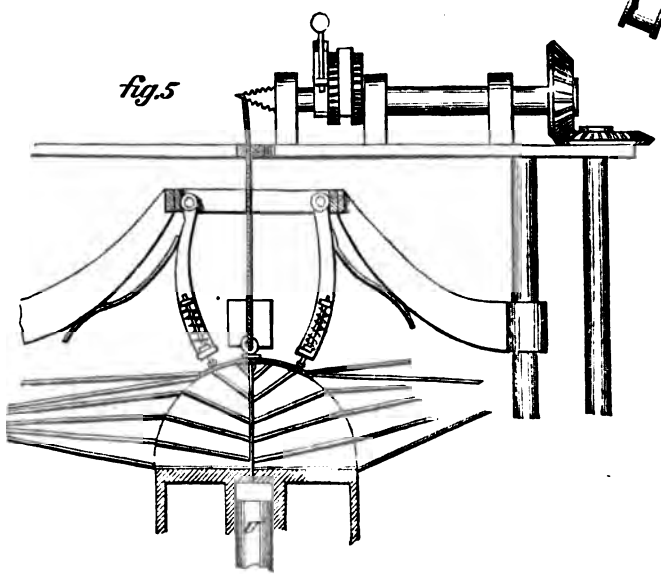

53

fig. 2

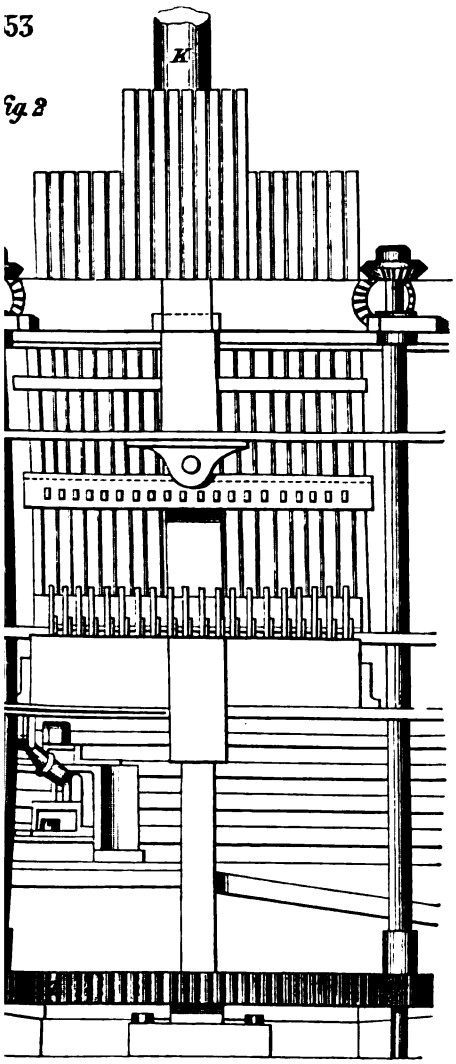

fig. 4

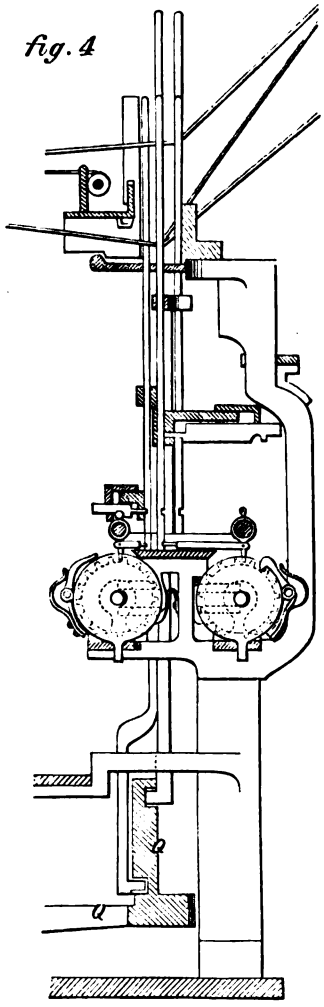

fig. 6

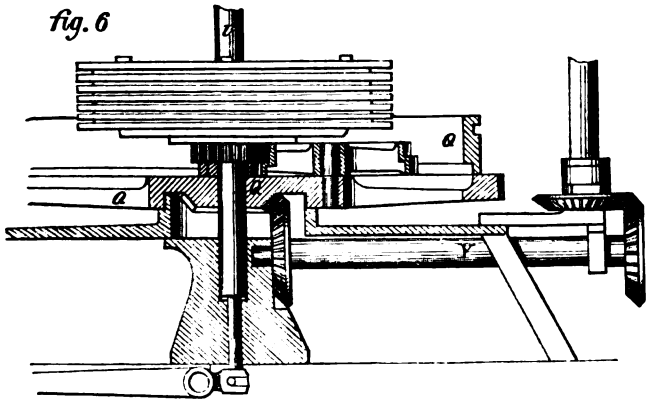

18320

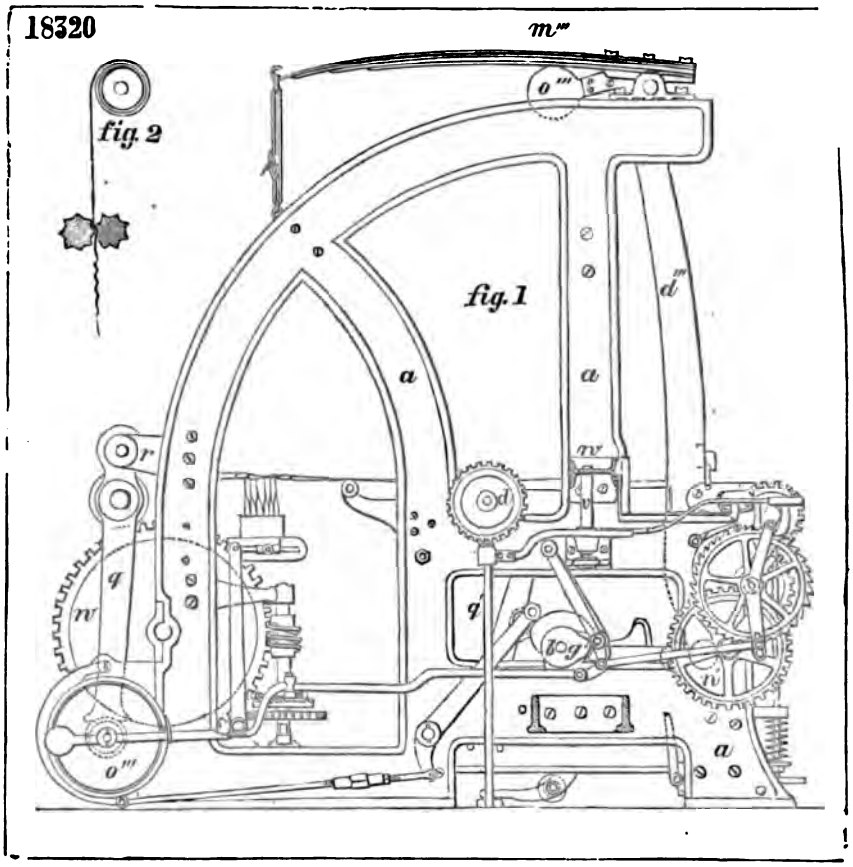

17489

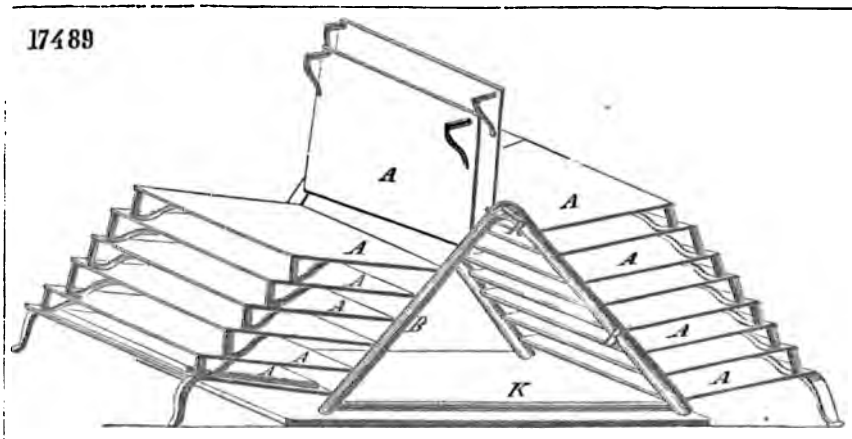

7926

fig.1

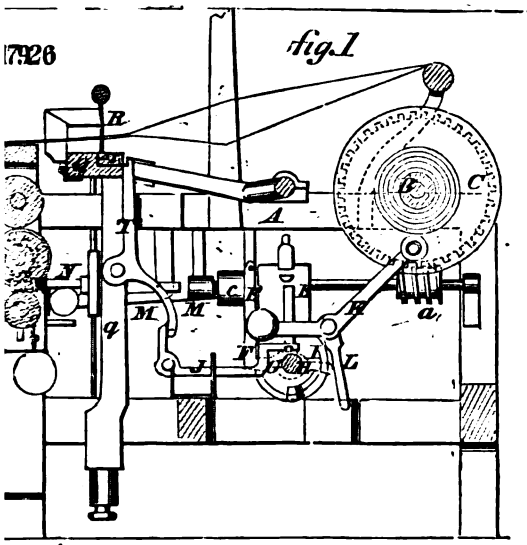

fig.3

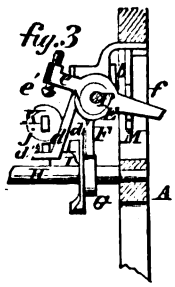

fig.2

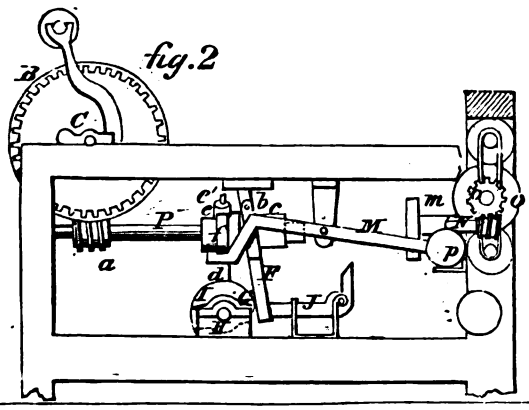

17663

fig.1

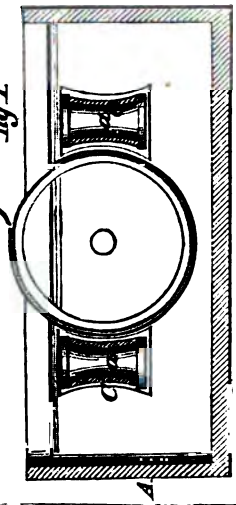

fig.2

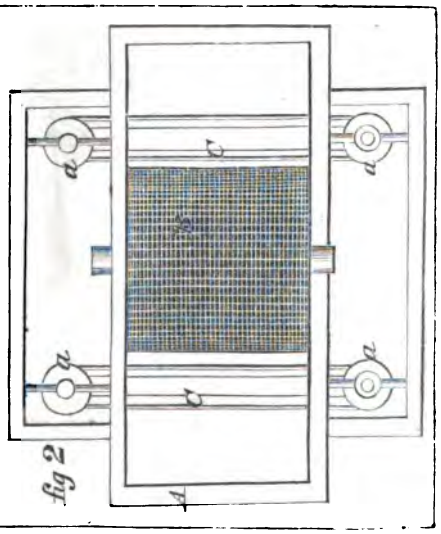

16928

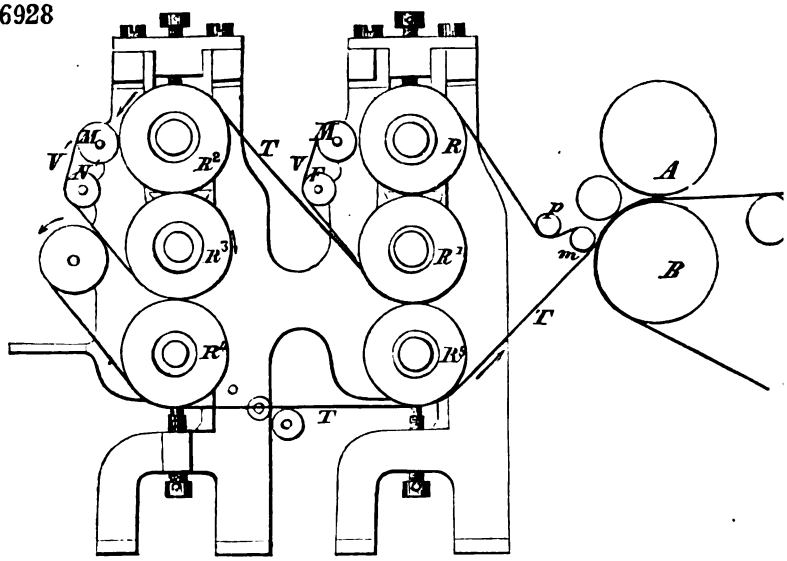

17352

fig. 2

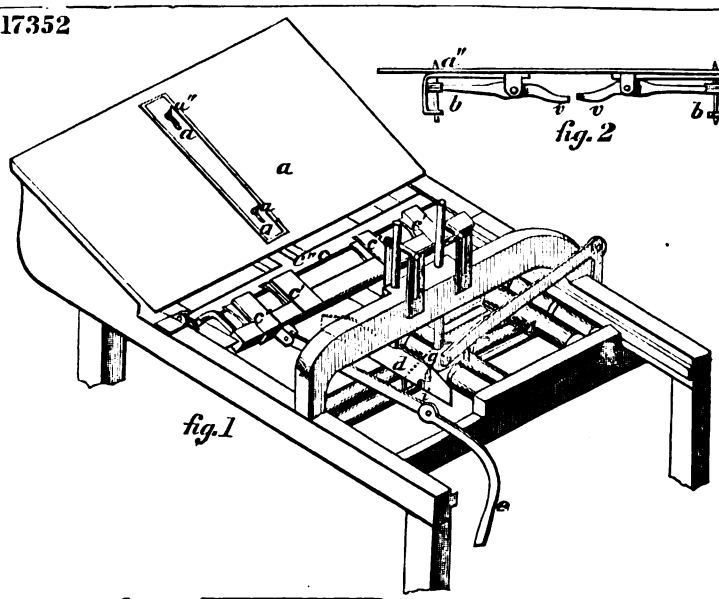

fig. 1

fig. 3

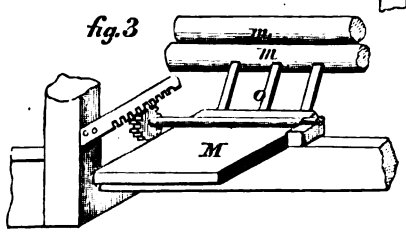

150

fig.1

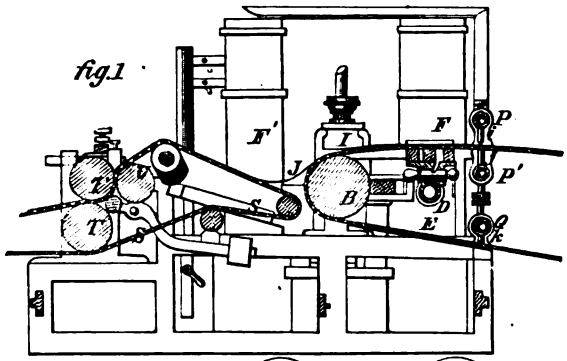

fig.2

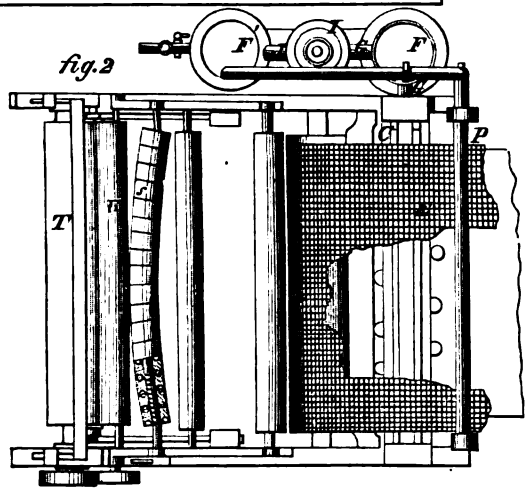

fig.3

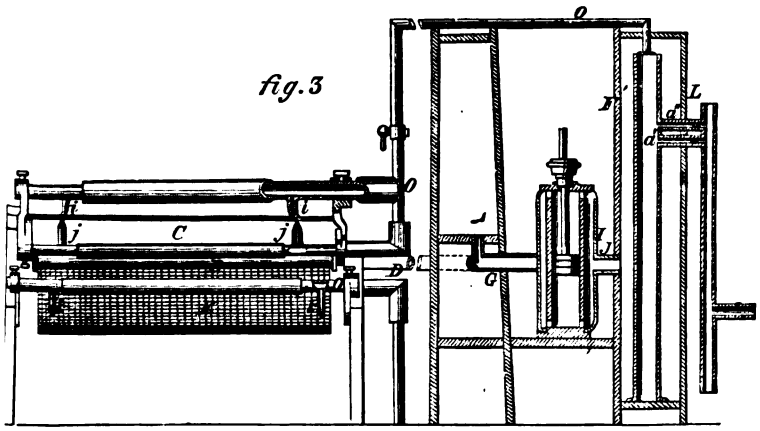

16927

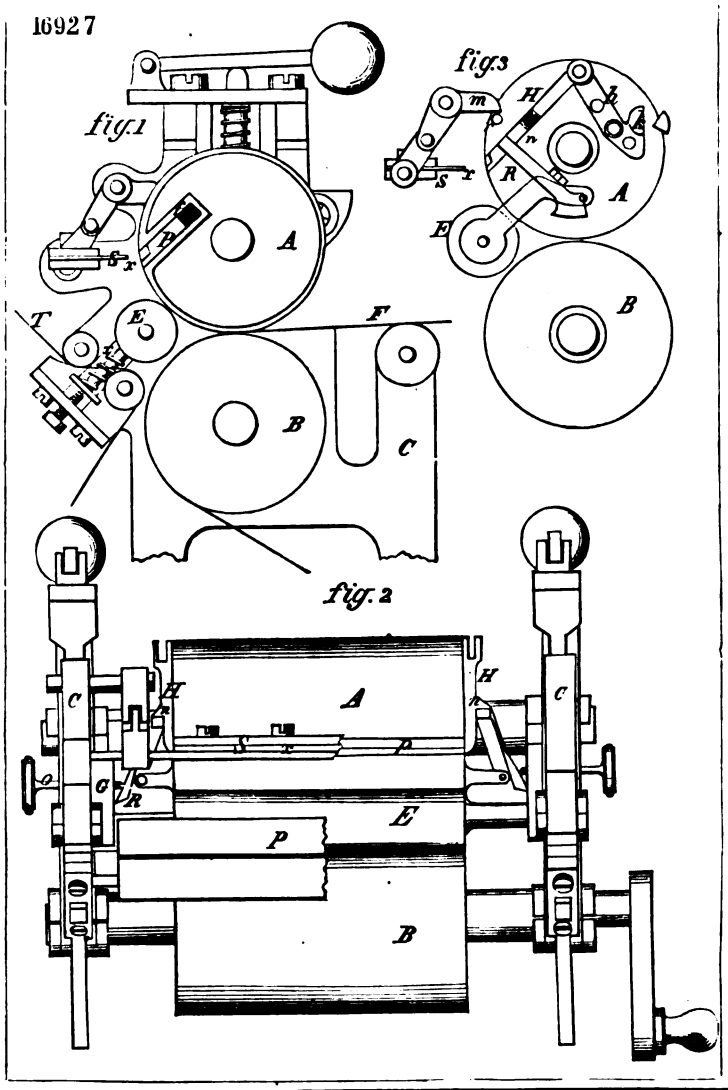

17267

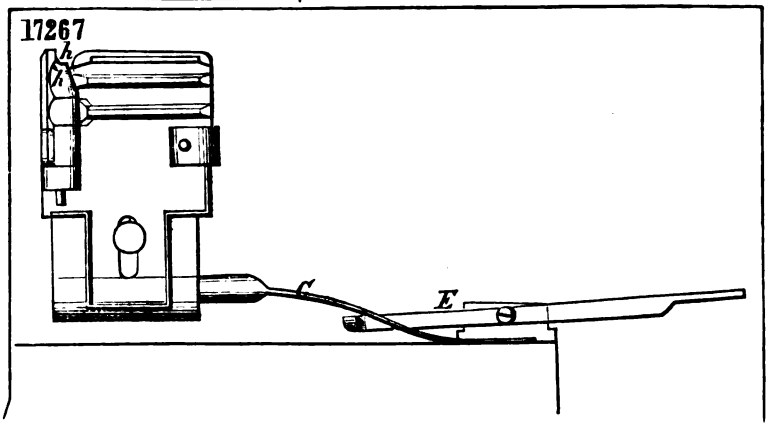

17787

fig. 2

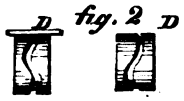

fig. 1

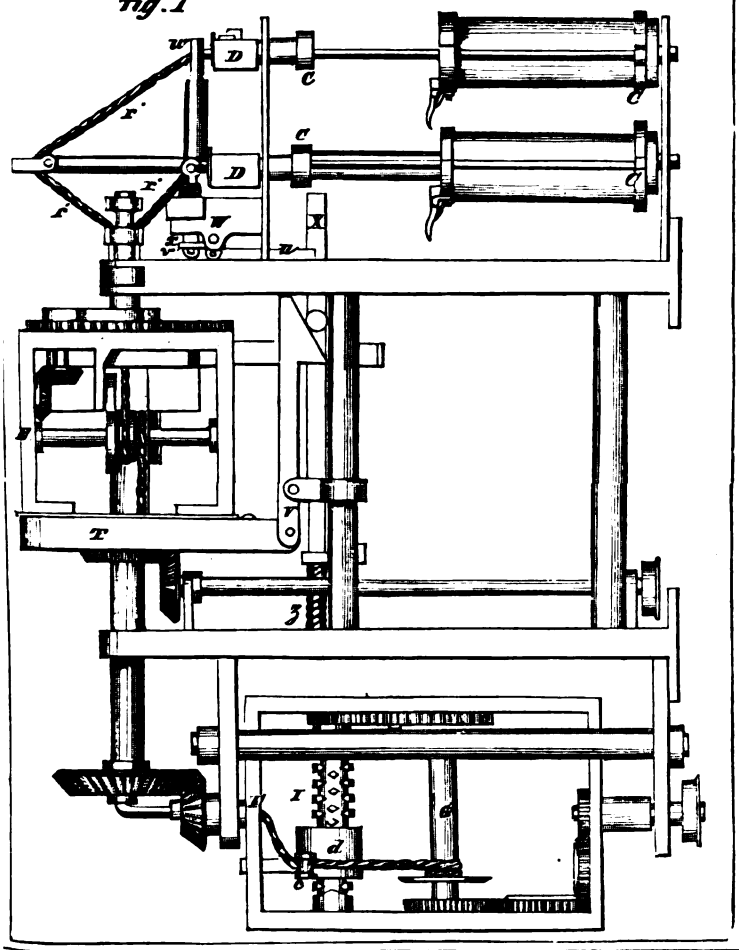

17917

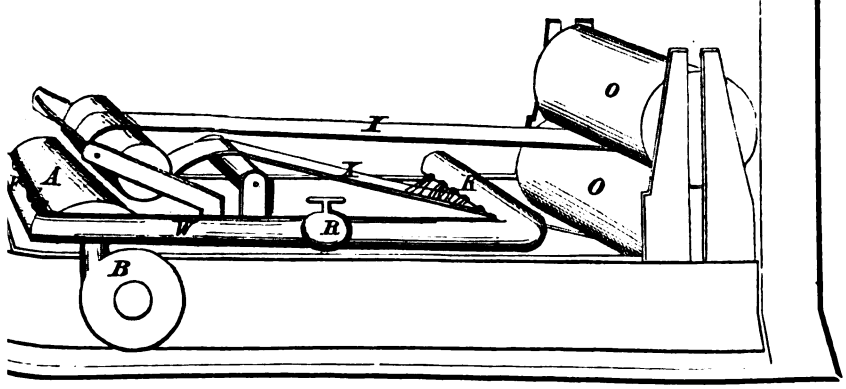

17005

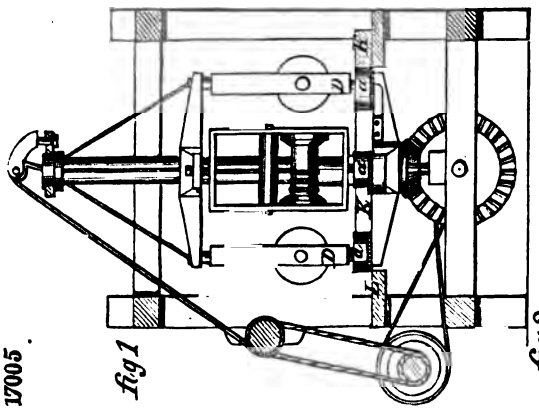

fig.1

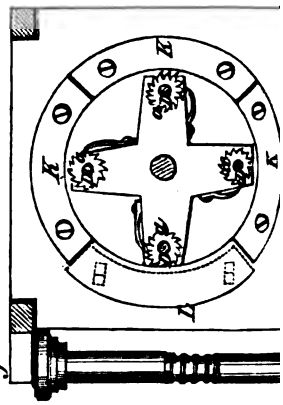

fig.2

16745

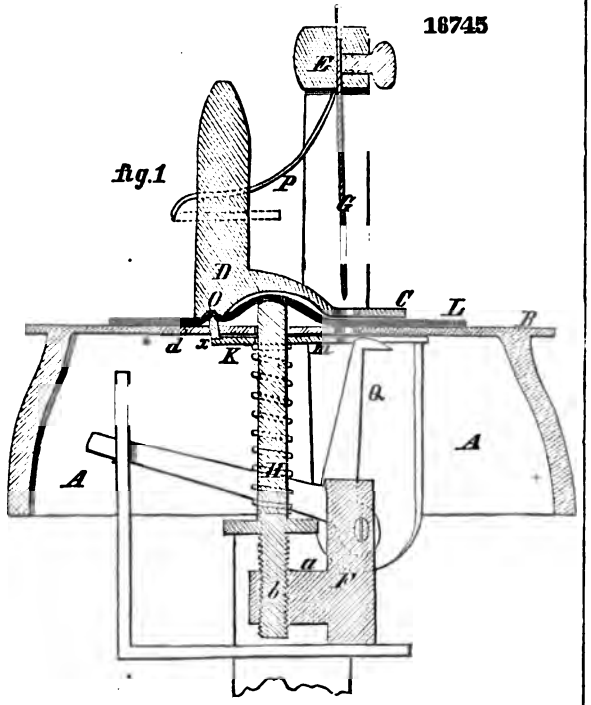

fig.1

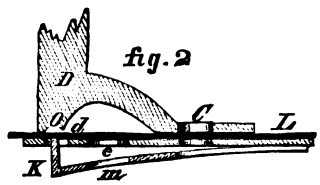

fig.2

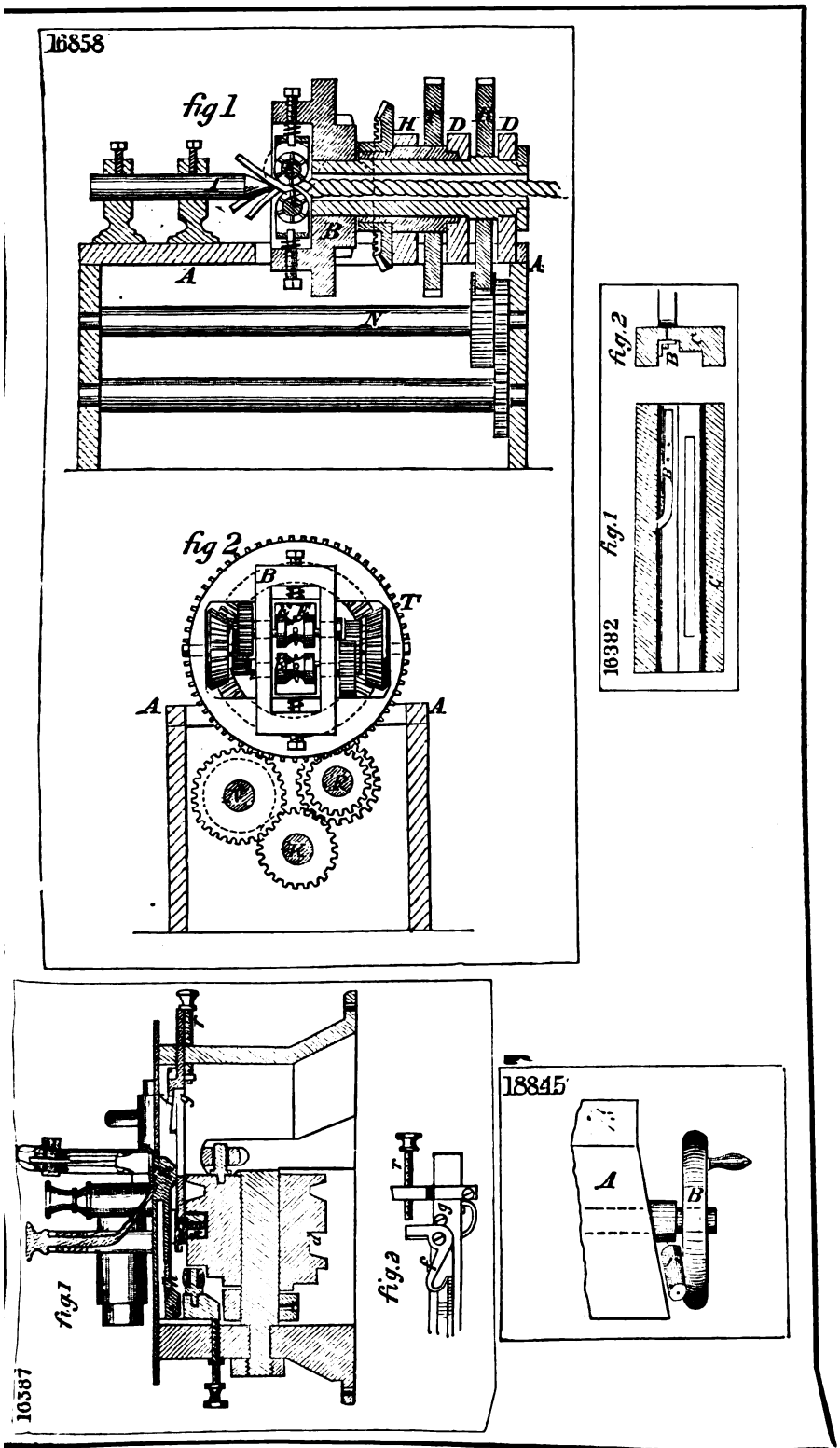
16858
fig 1
fig 2
fig.2
fig.1
16382
fig.1
fig.2
16387
18845

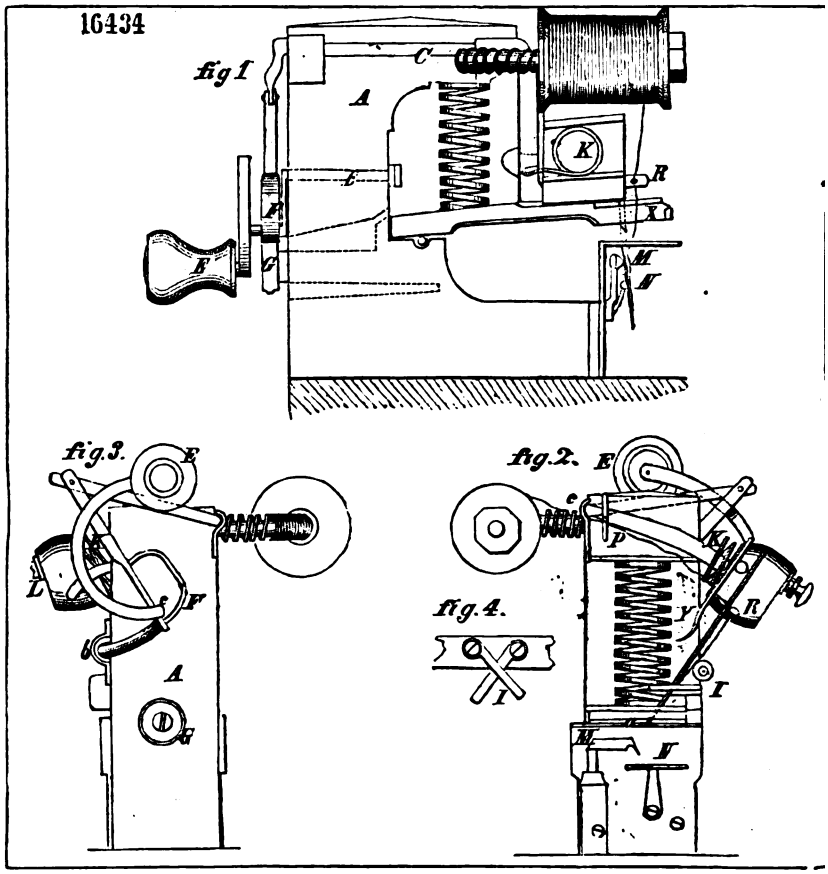
16434
fig 1
fig.3.
fig.2.
fig.4.

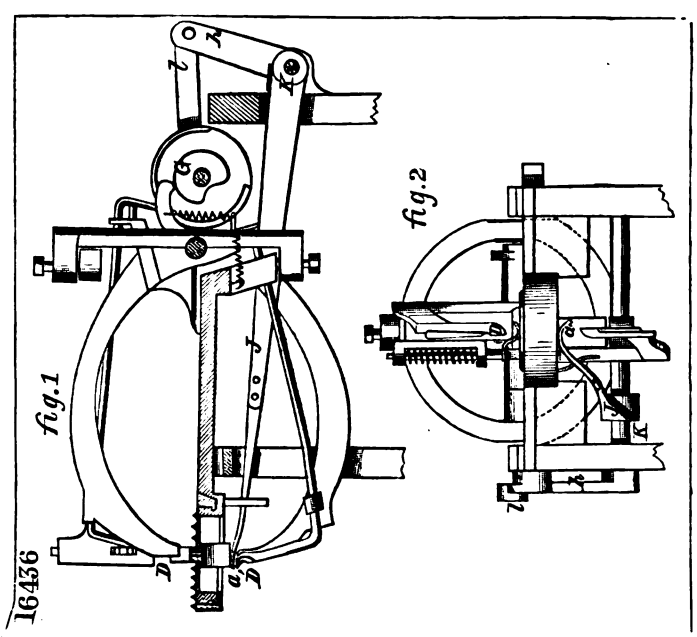
fig.1
fig.2
16436

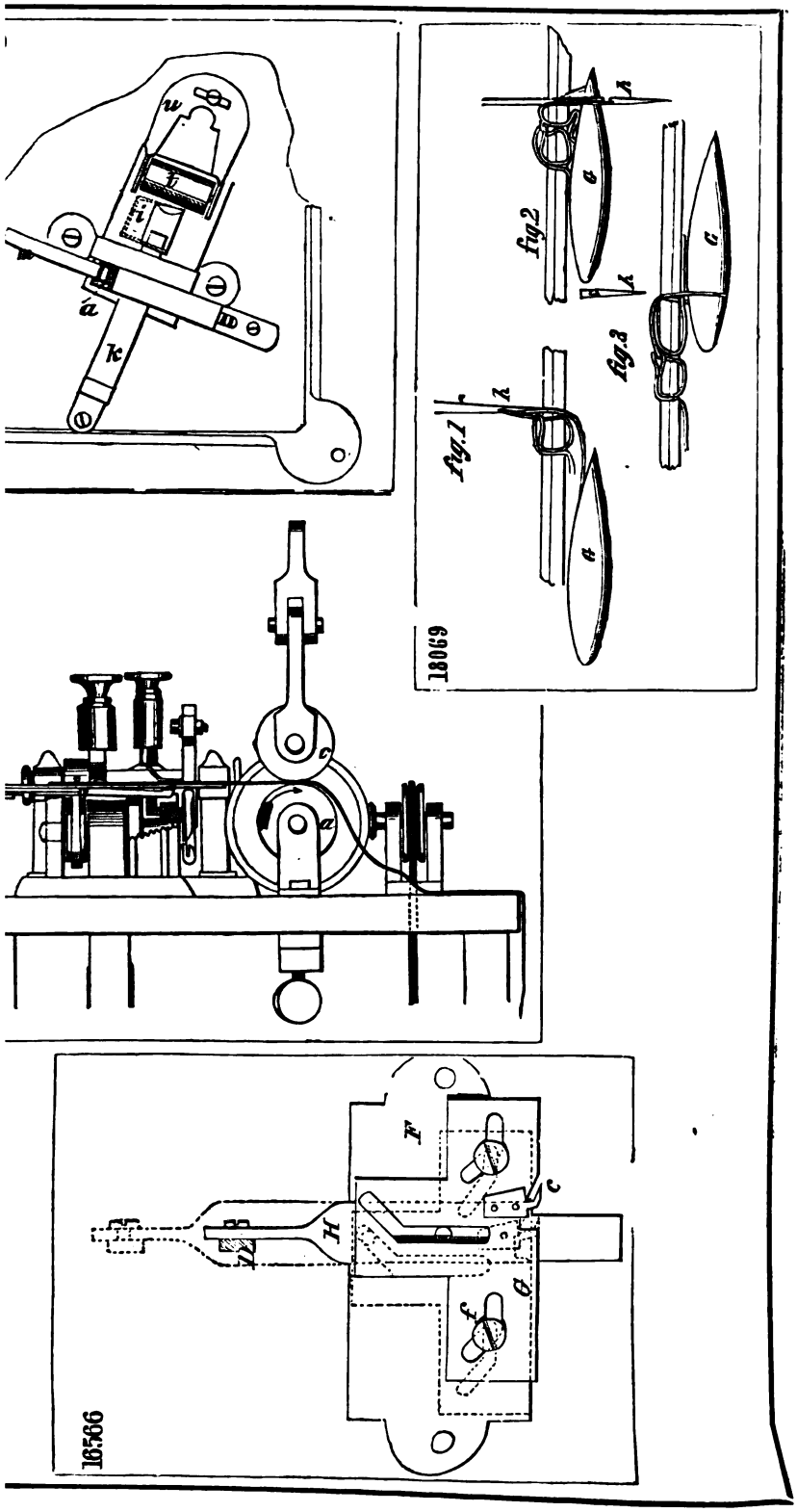
a
k
fig.2
fig.3
fig.1
18069
16566

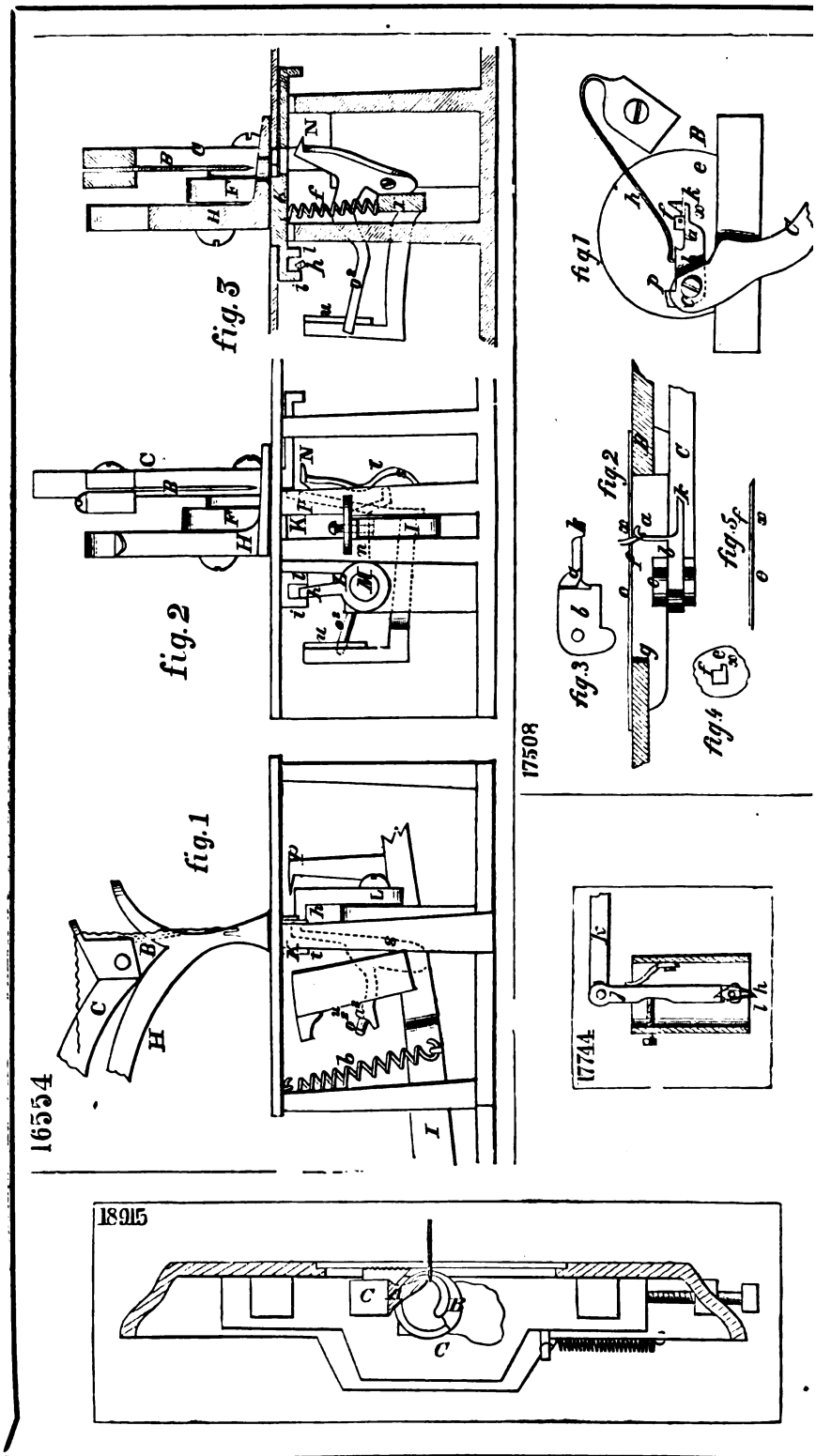
16554
fig. 1
fig. 2
fig. 3
17508
fig 1
fig 2
fig 3
fig 4
fig 5
17744
18915

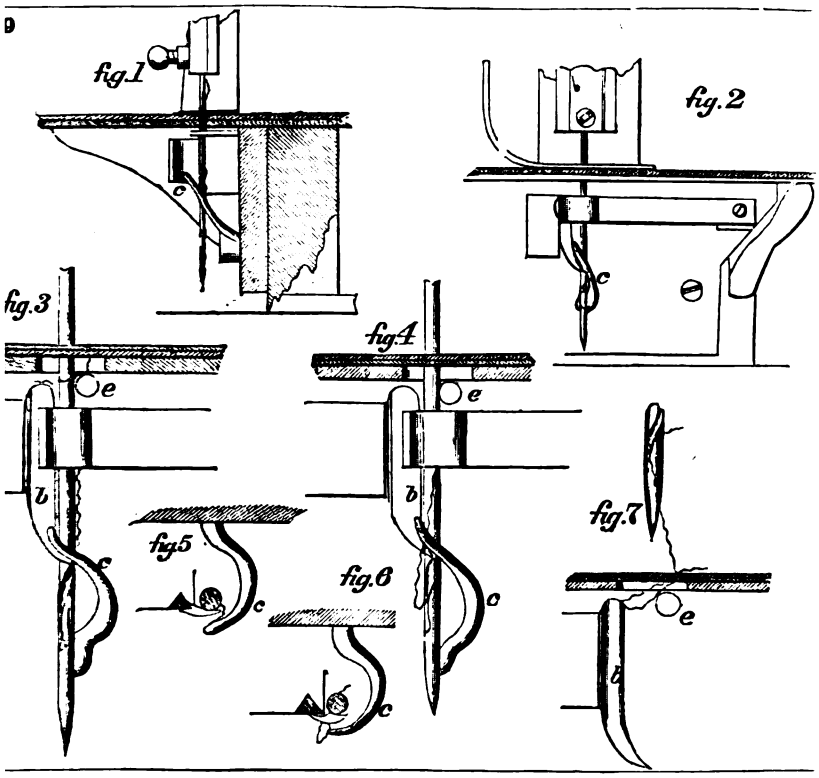
fig.1
fig.2
fig.3
fig.4
fig.5
fig.6
fig.7
c
e
b

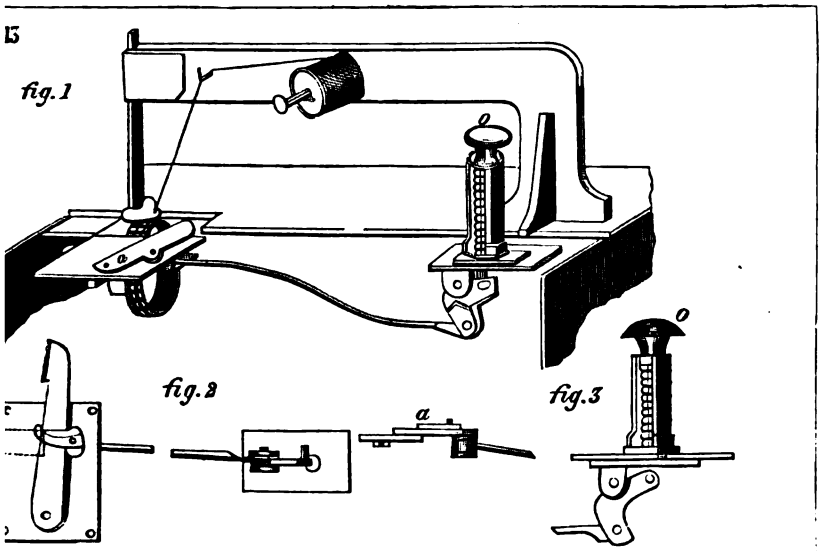
fig.1
fig.2
fig.3
a

16710

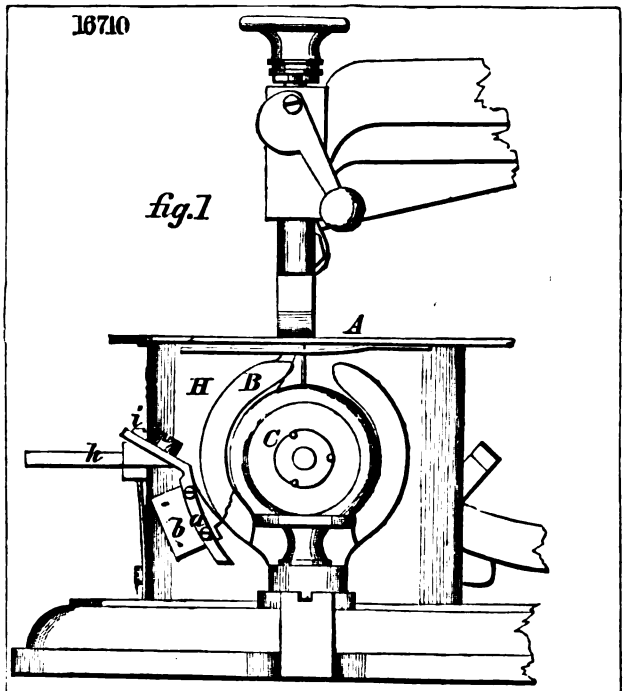

18102

17835

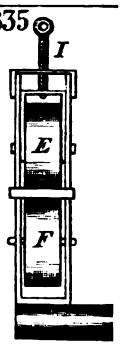

1852

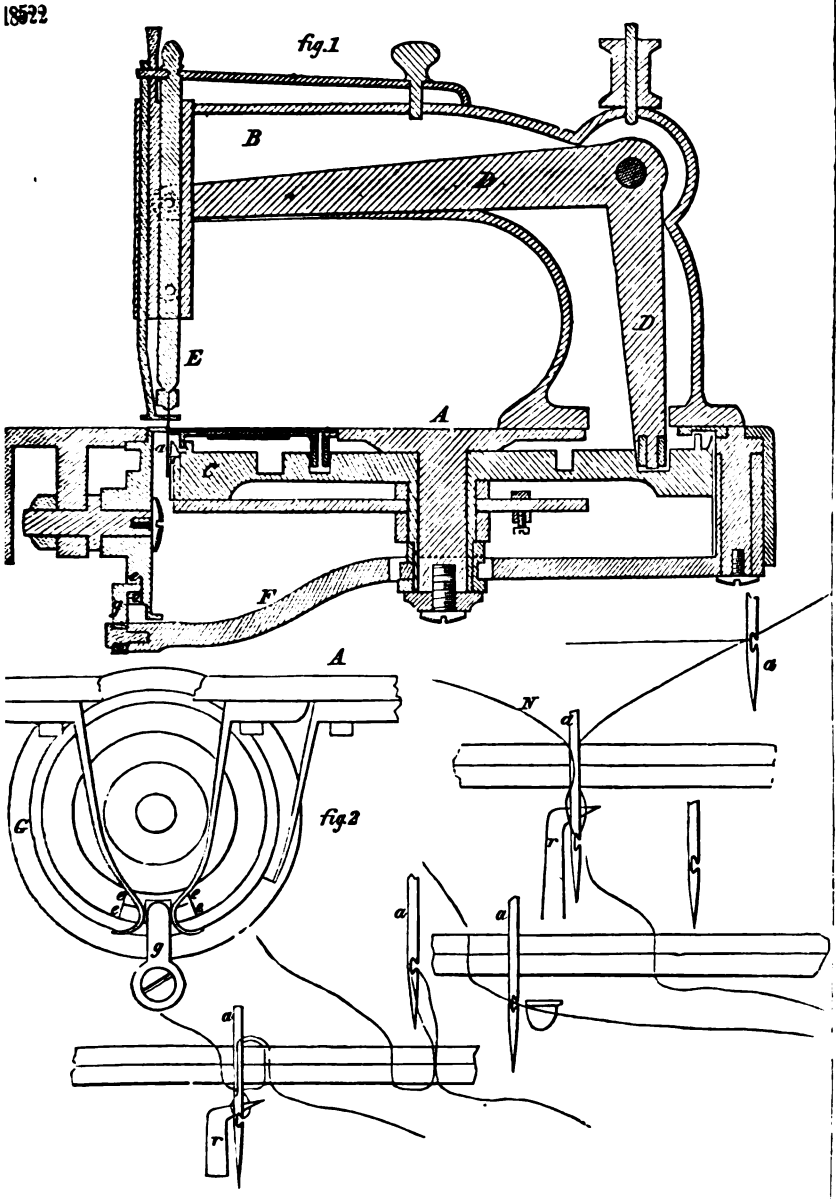

17366

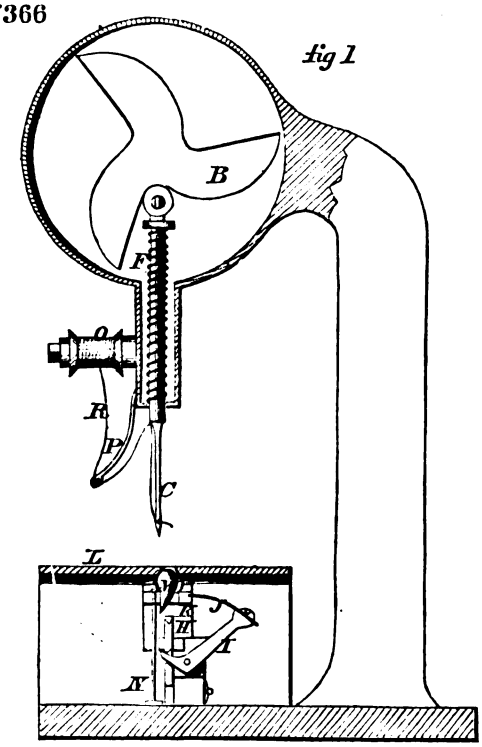

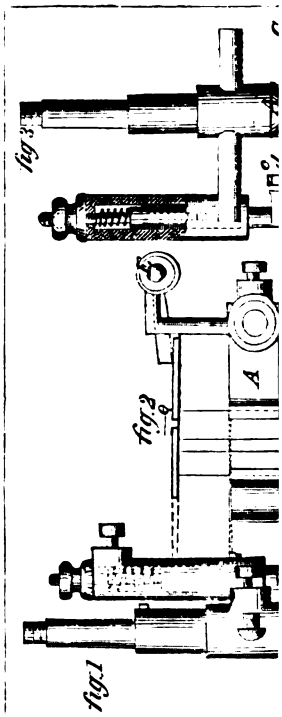

16566

16914

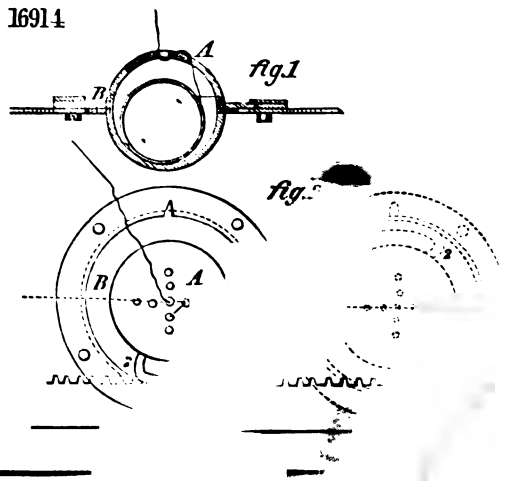

17049

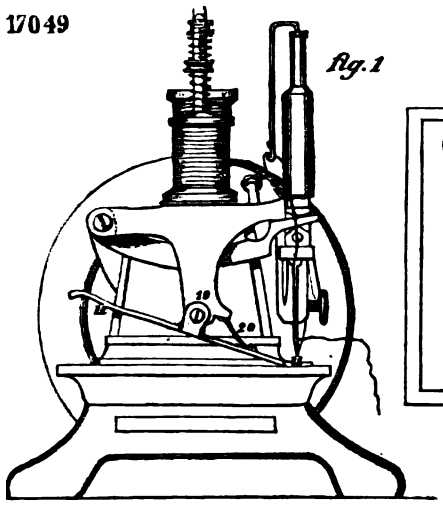

fig. 1

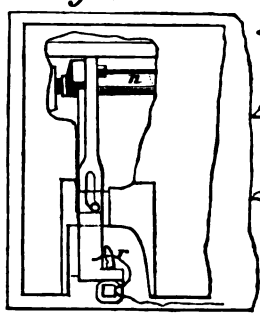

fig. 2

fig. 3

fig. 4

fig. 5

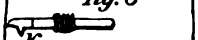

fig. 6

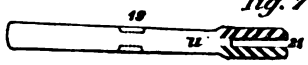

fig. 7

17400

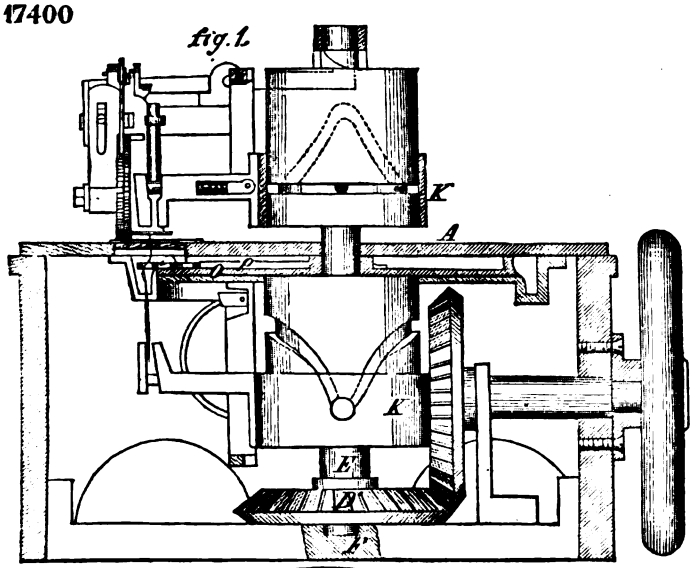

fig. 1.

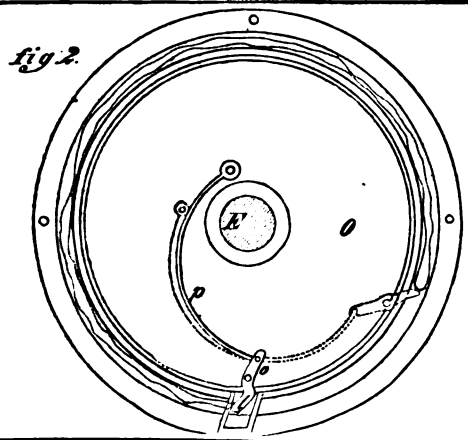

fig. 2.

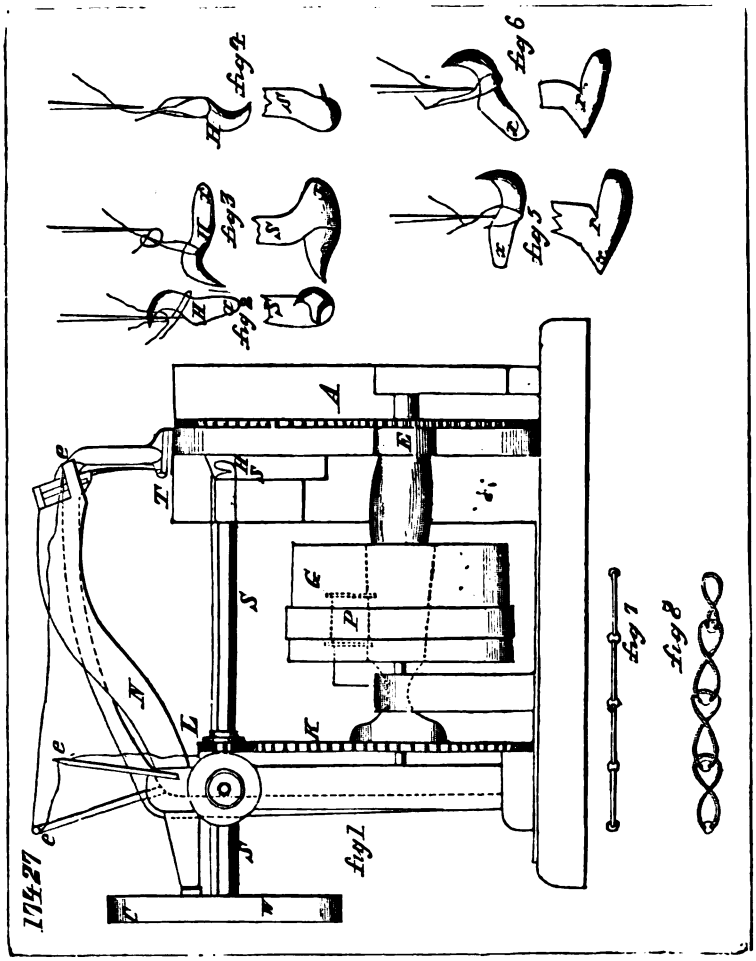
fig 4
fig 6
fig 3
fig 5
fig 1
fig 8
fig 7
17427

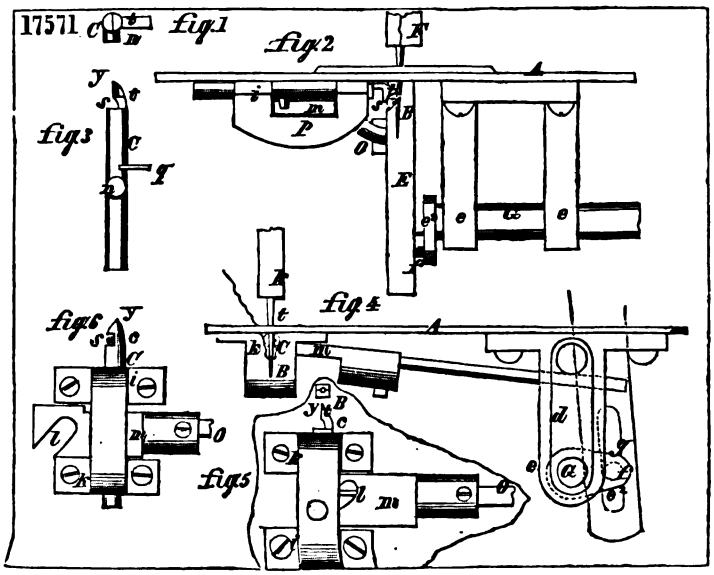
17571
fig 1
fig 2
fig 3
fig 4
fig 6
fig 5

17717

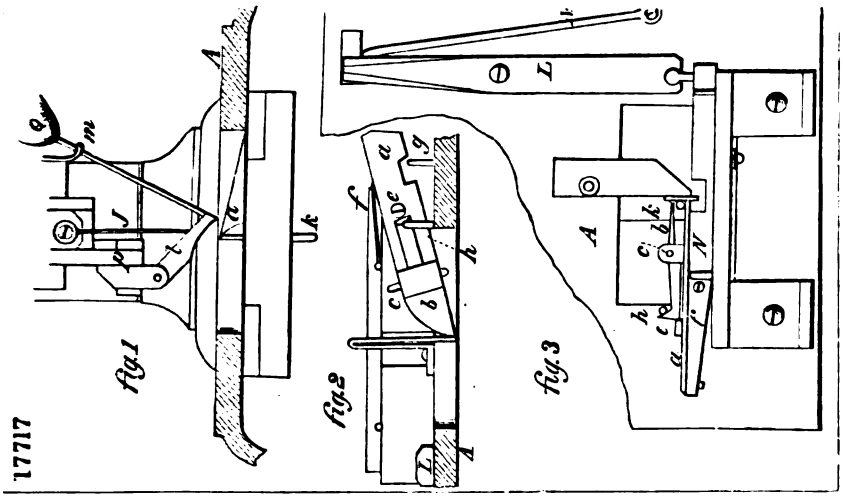

7679

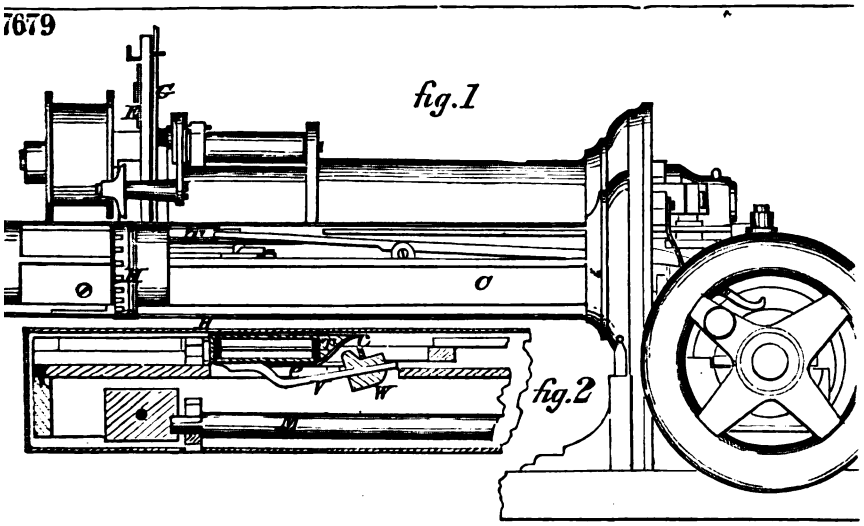

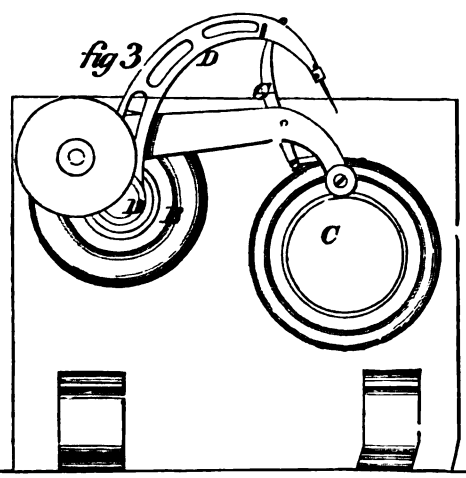

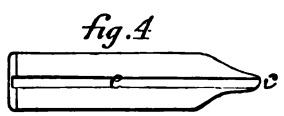

18000

fig. 1

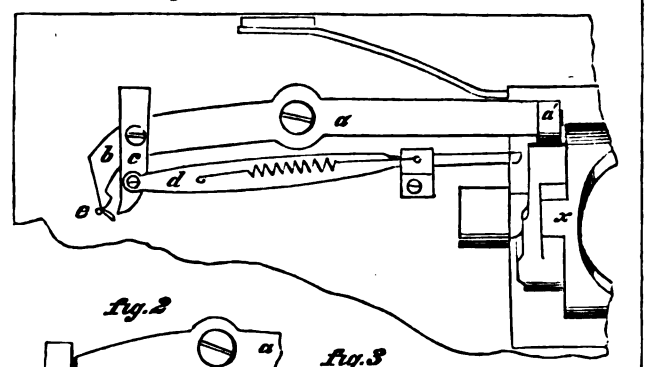

fig. 2

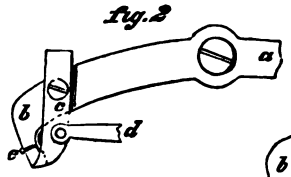

fig. 3

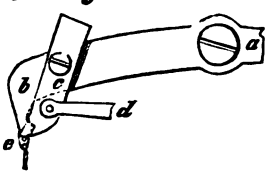

18071

fig. 1

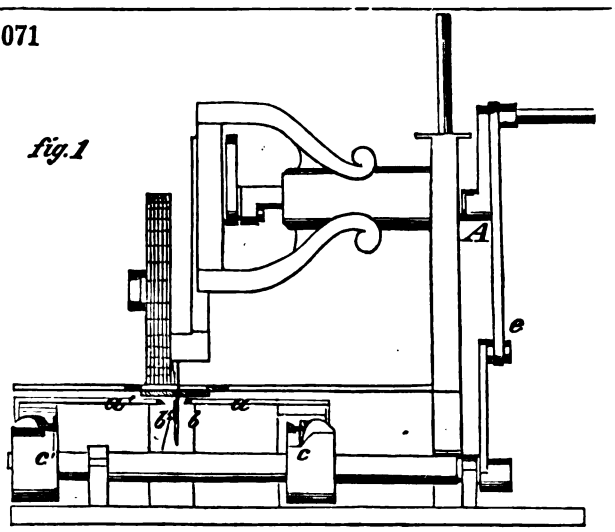

fig. 2

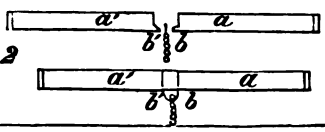

fig. 3

18068

fig. 9.

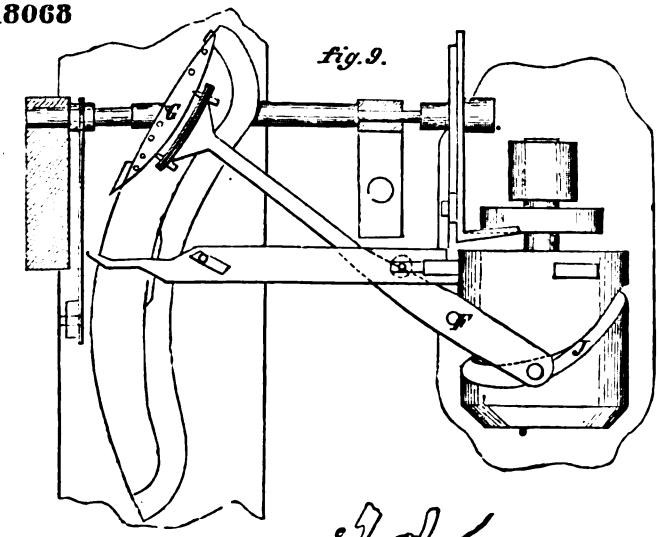

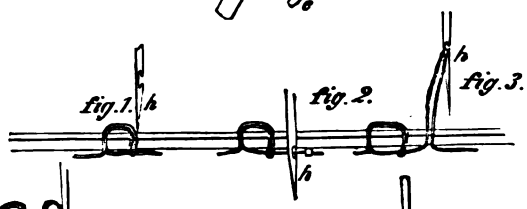

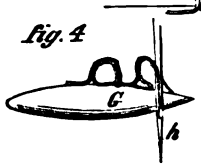

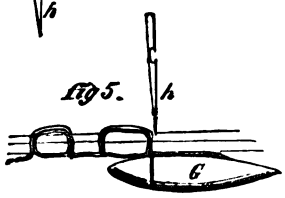

fig. 6.

fig. 7.

29

fig. 1

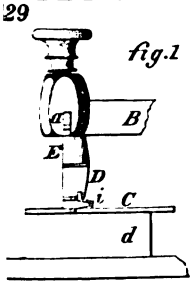

fig. 2

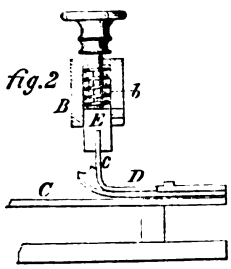

fig. 3

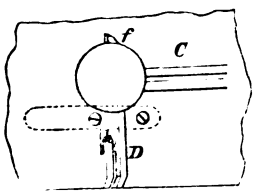

18285

fig.1

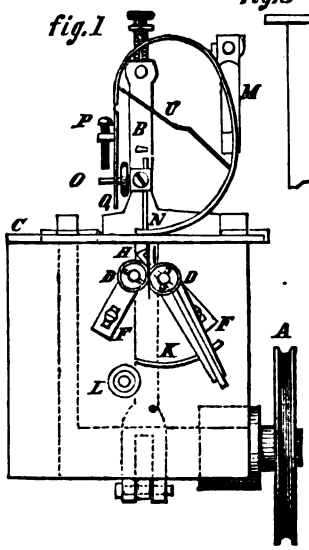

fig.3

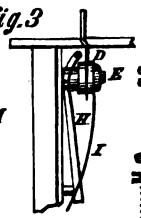

fig.2

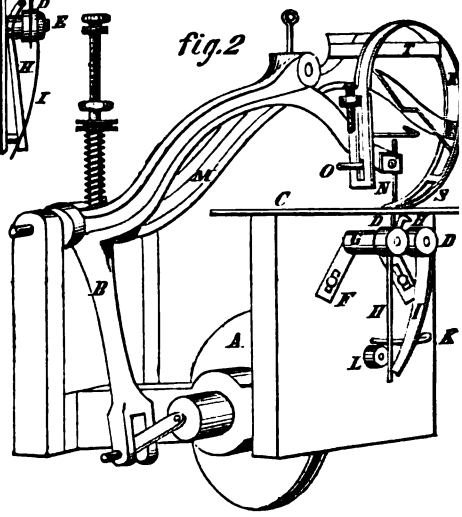

18854

fig.2

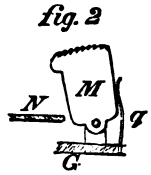

fig.1

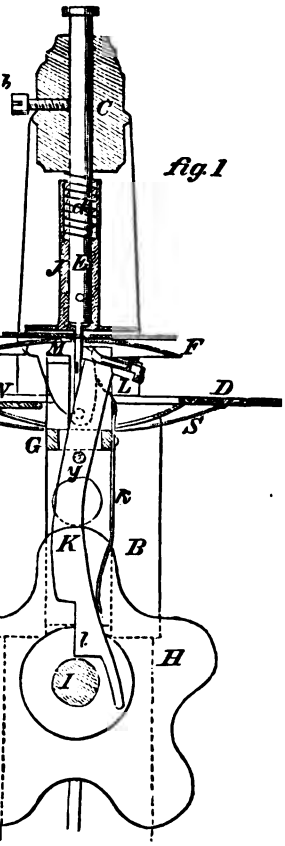

fig.3

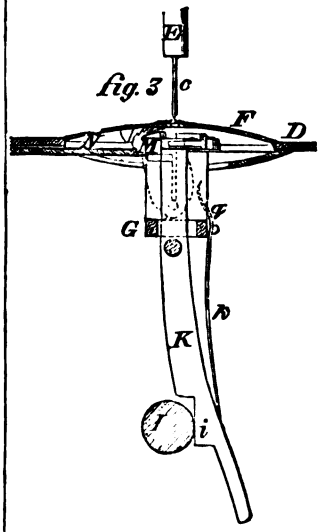

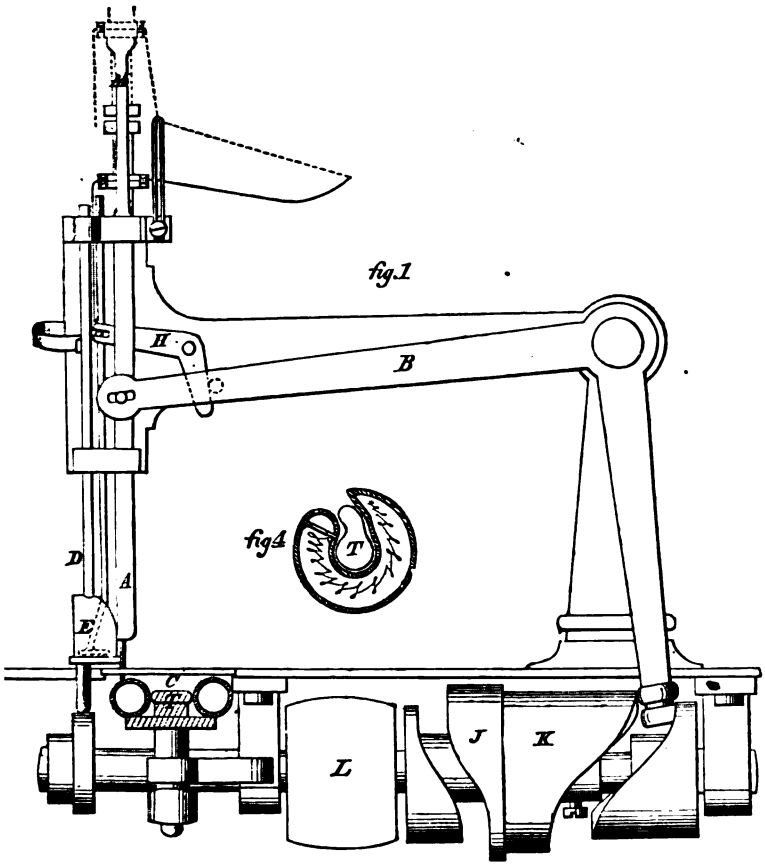

ad18359

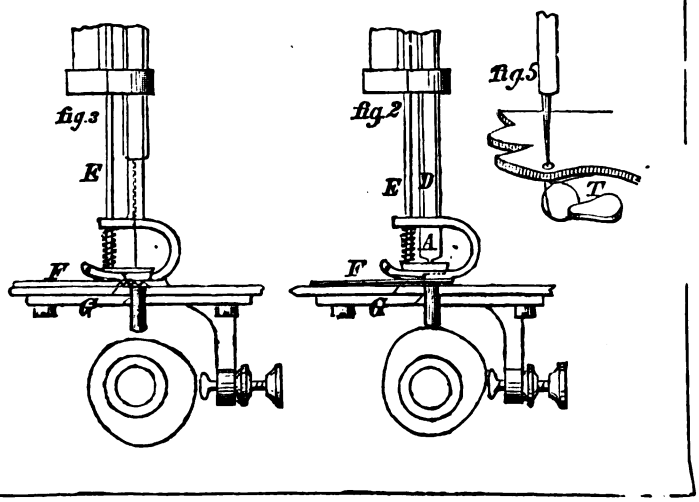

18470

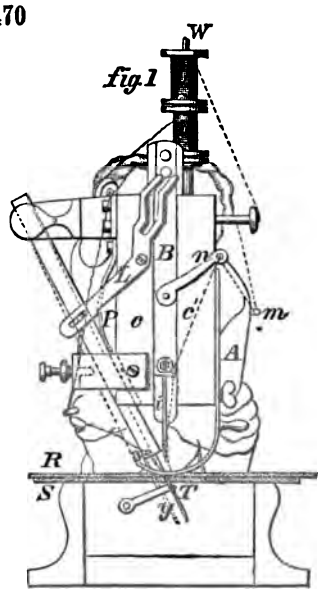

fig. 1

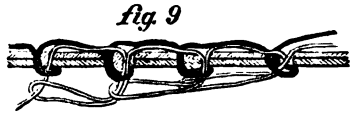

fig. 9

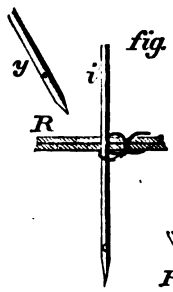

fig. 8

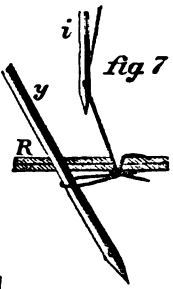

fig. 7

fig. 6

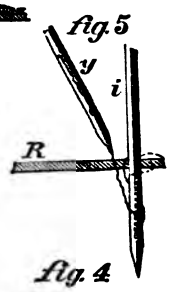

fig. 5

fig. 3

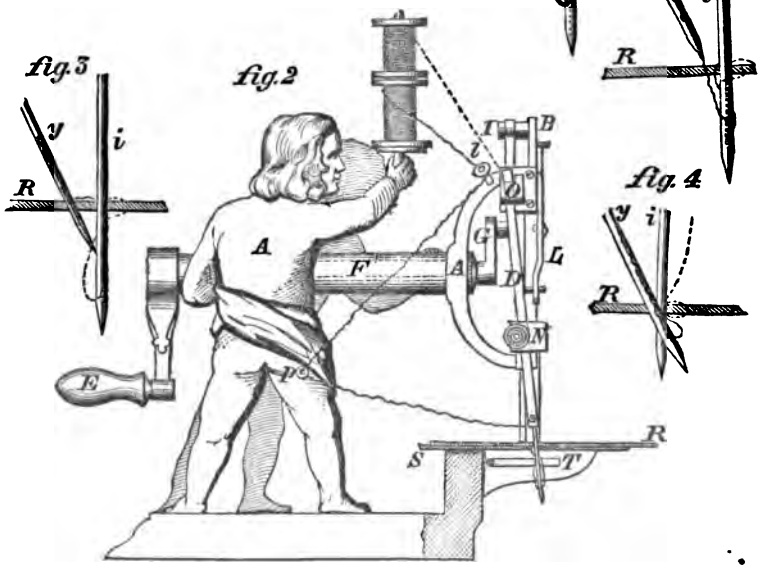

fig. 2

fig. 4

18350

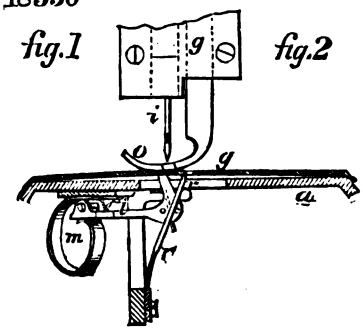

fig. 1

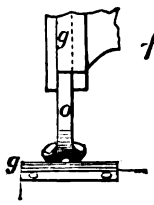

fig. 2

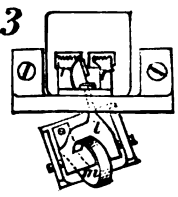

fig. 3

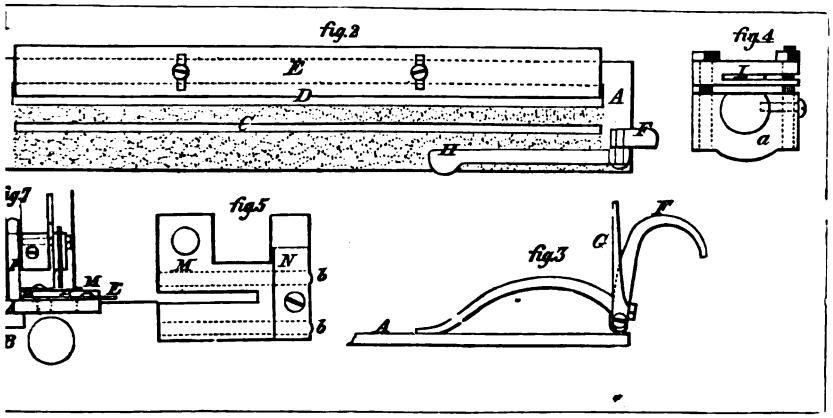
fig.2
fig.4
fig.5
fig.3

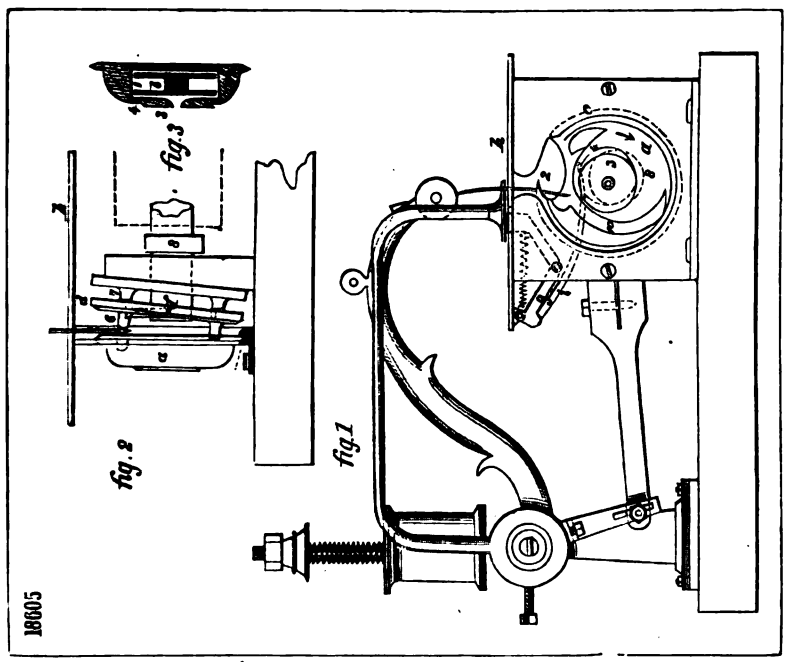
fig.3
fig.2
fig.1
18605

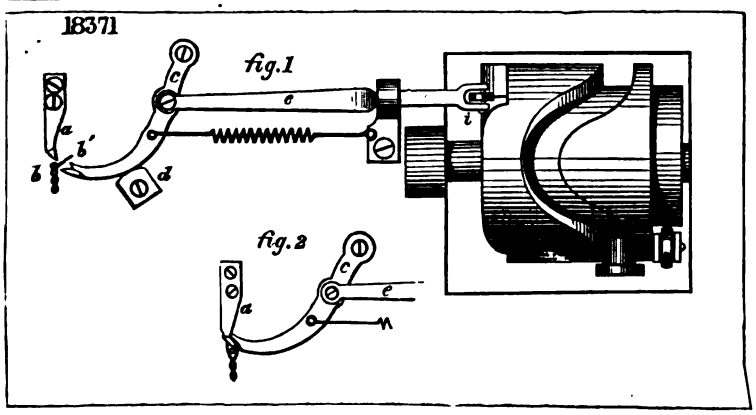
18371
fig.1
fig.2

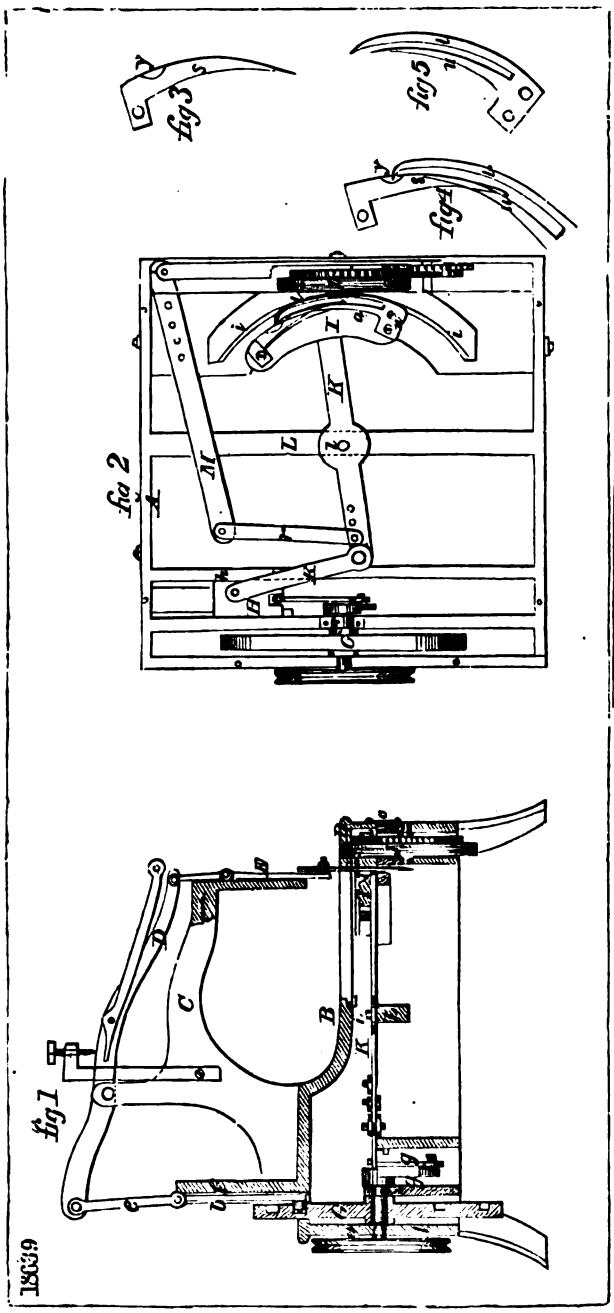
fig 3
fig 5
fig 4
fig 2
fig 1
18699

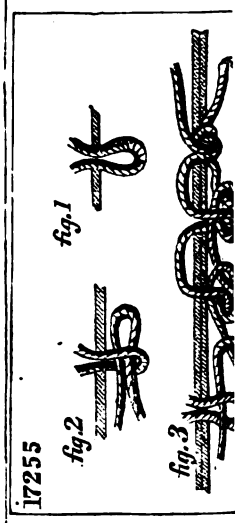
17255
fig.1
fig.2
fig.3

17272
A
B

80

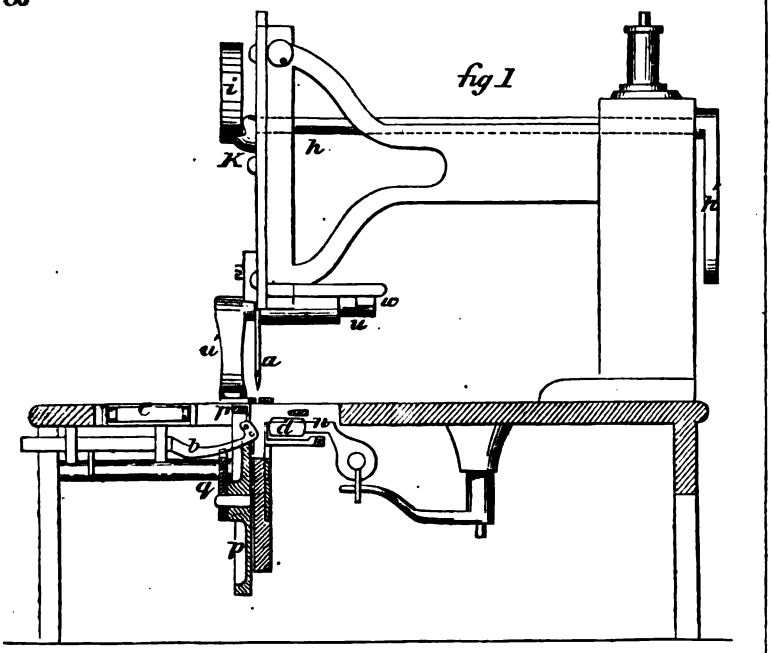

a18880

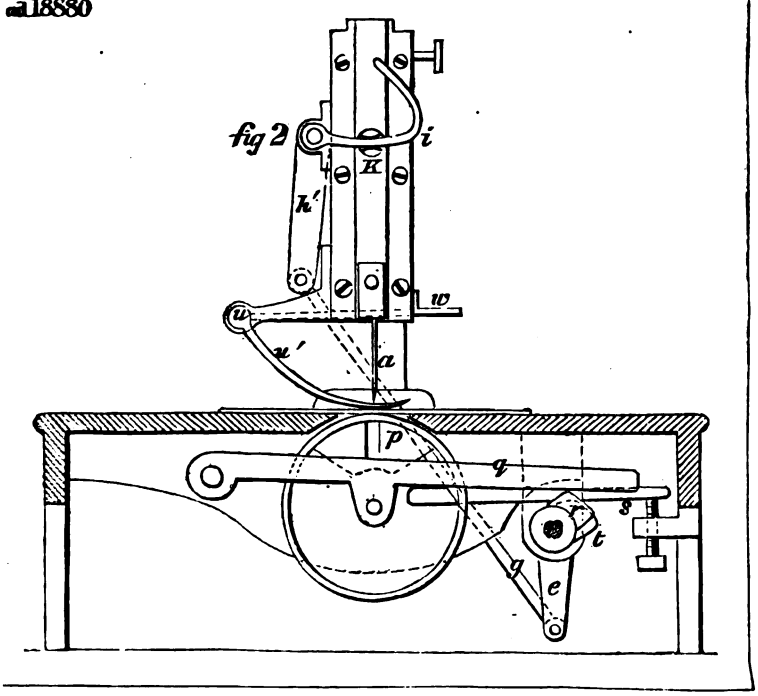

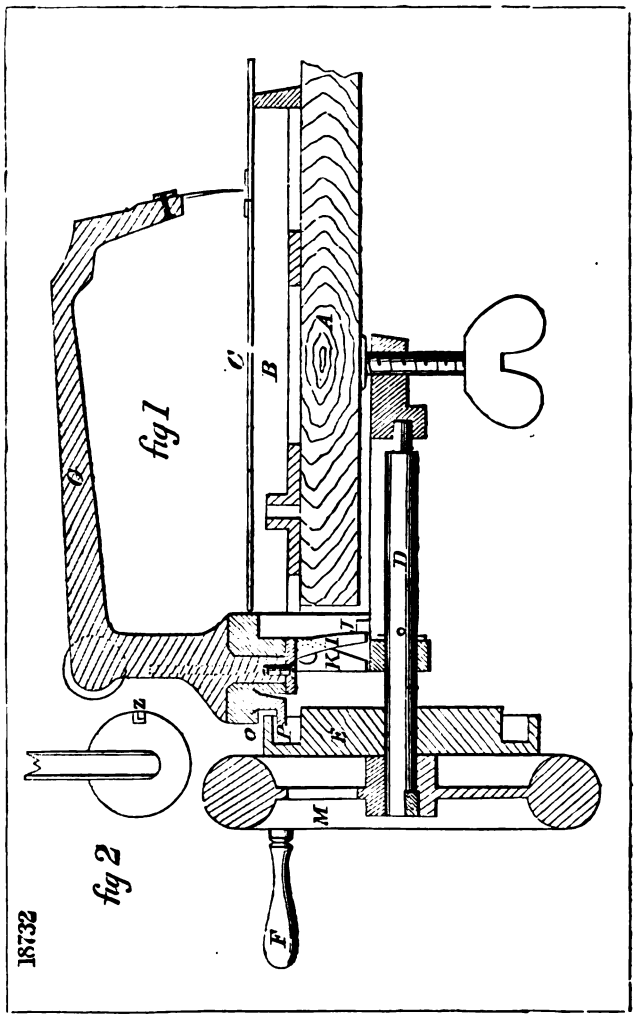
fig 1
fig 2
18732

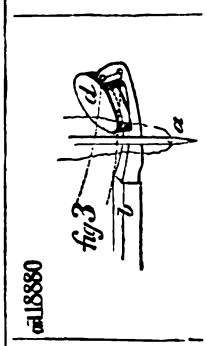
fig 3
ail 18880

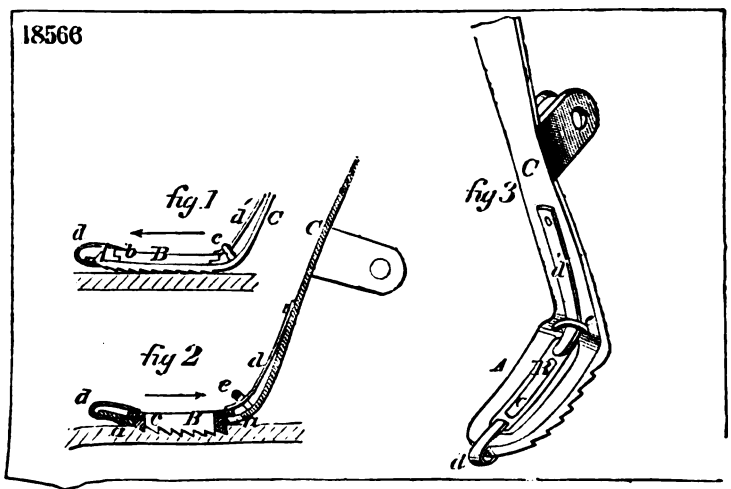
18566
fig 1
fig 2
fig 3

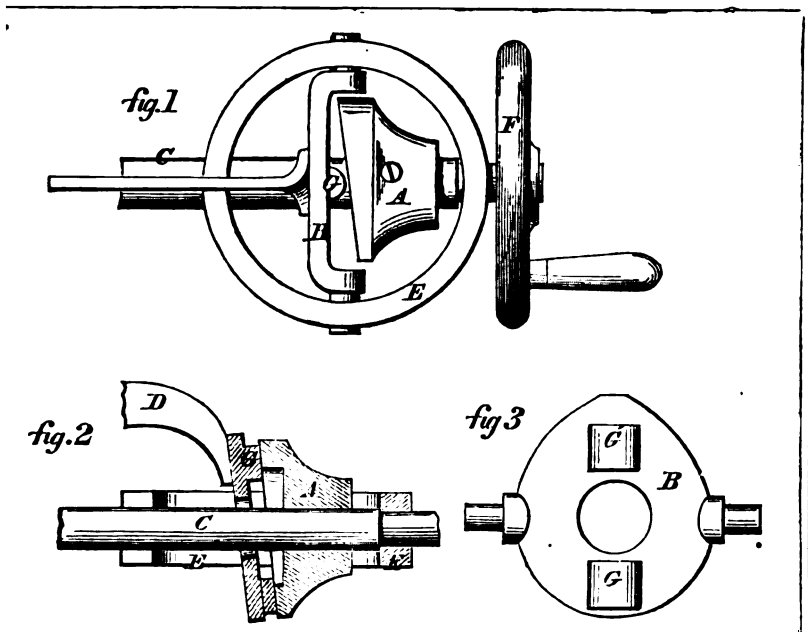
fig.1
fig.2
fig 3

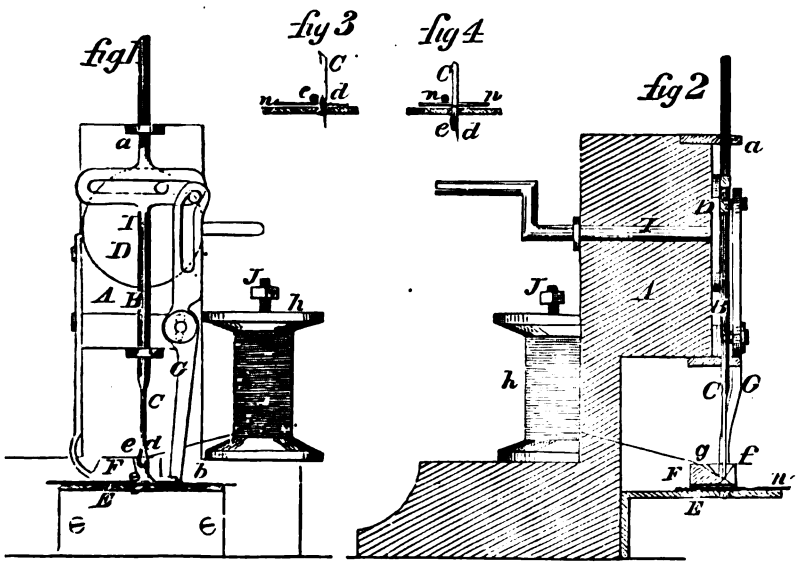
fig1
fig 3
fig 4
fig 2

18793

fig.1

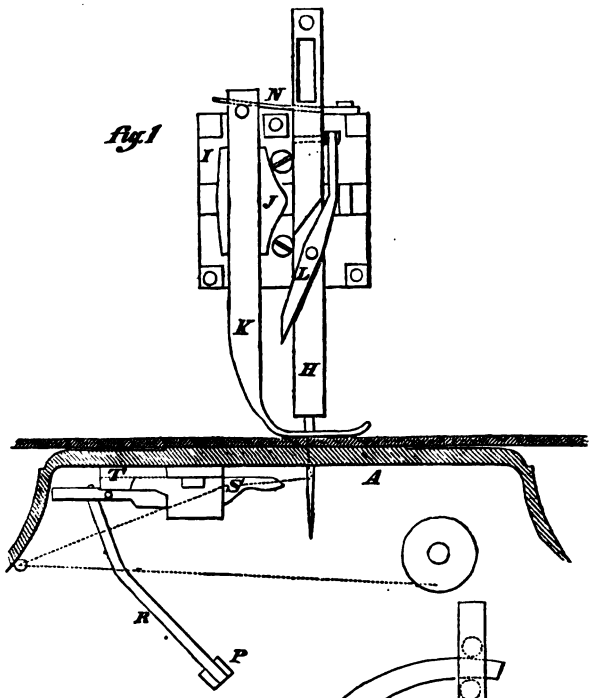

fig.2

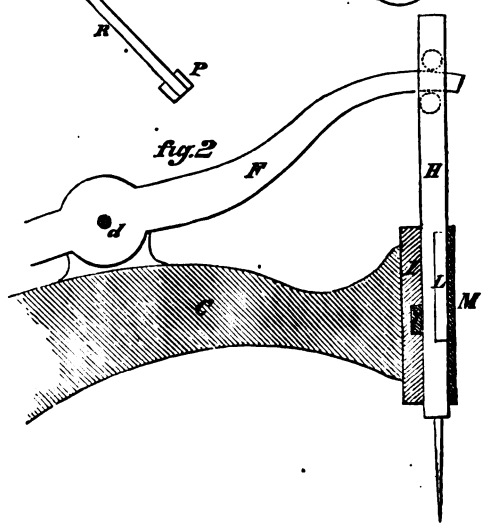

18807

fig.1

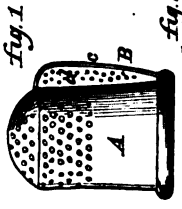

fig.2

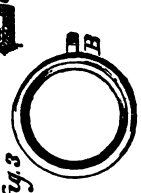

fig.3

16934

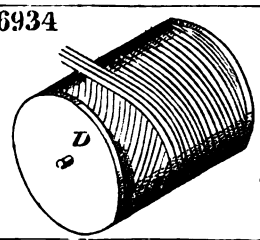

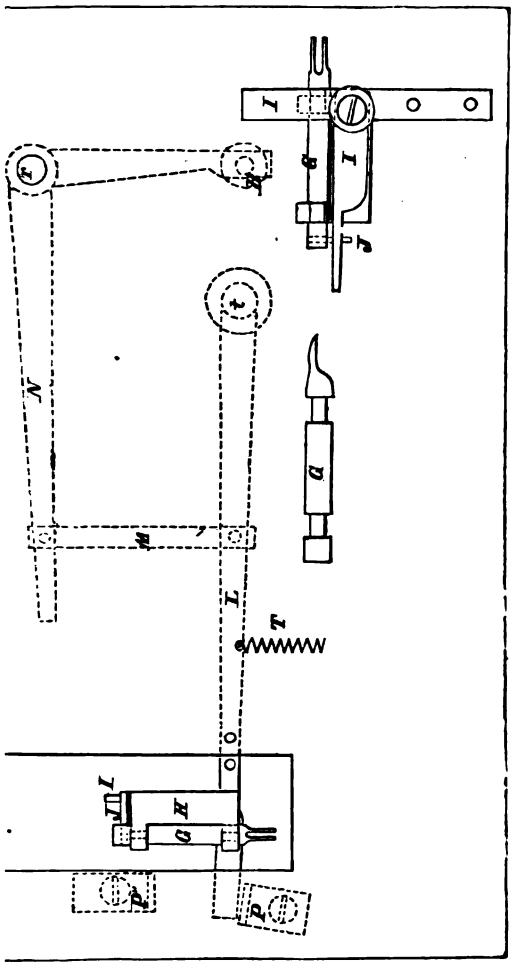

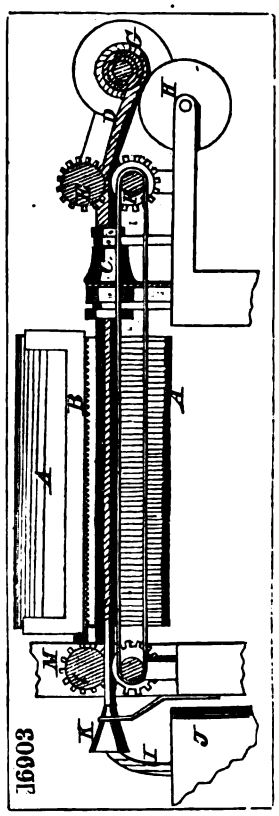
16903

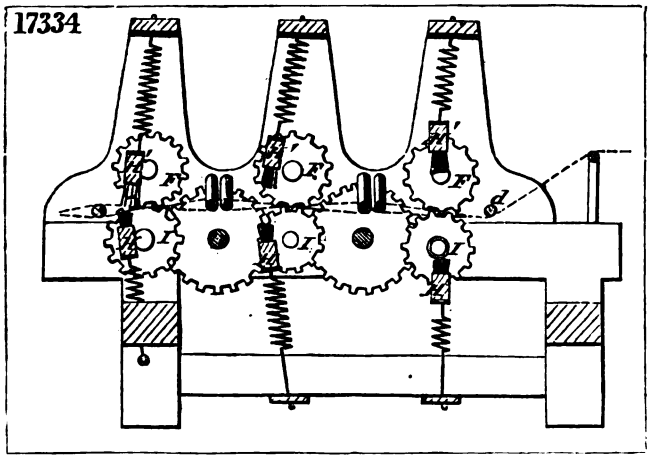
17334

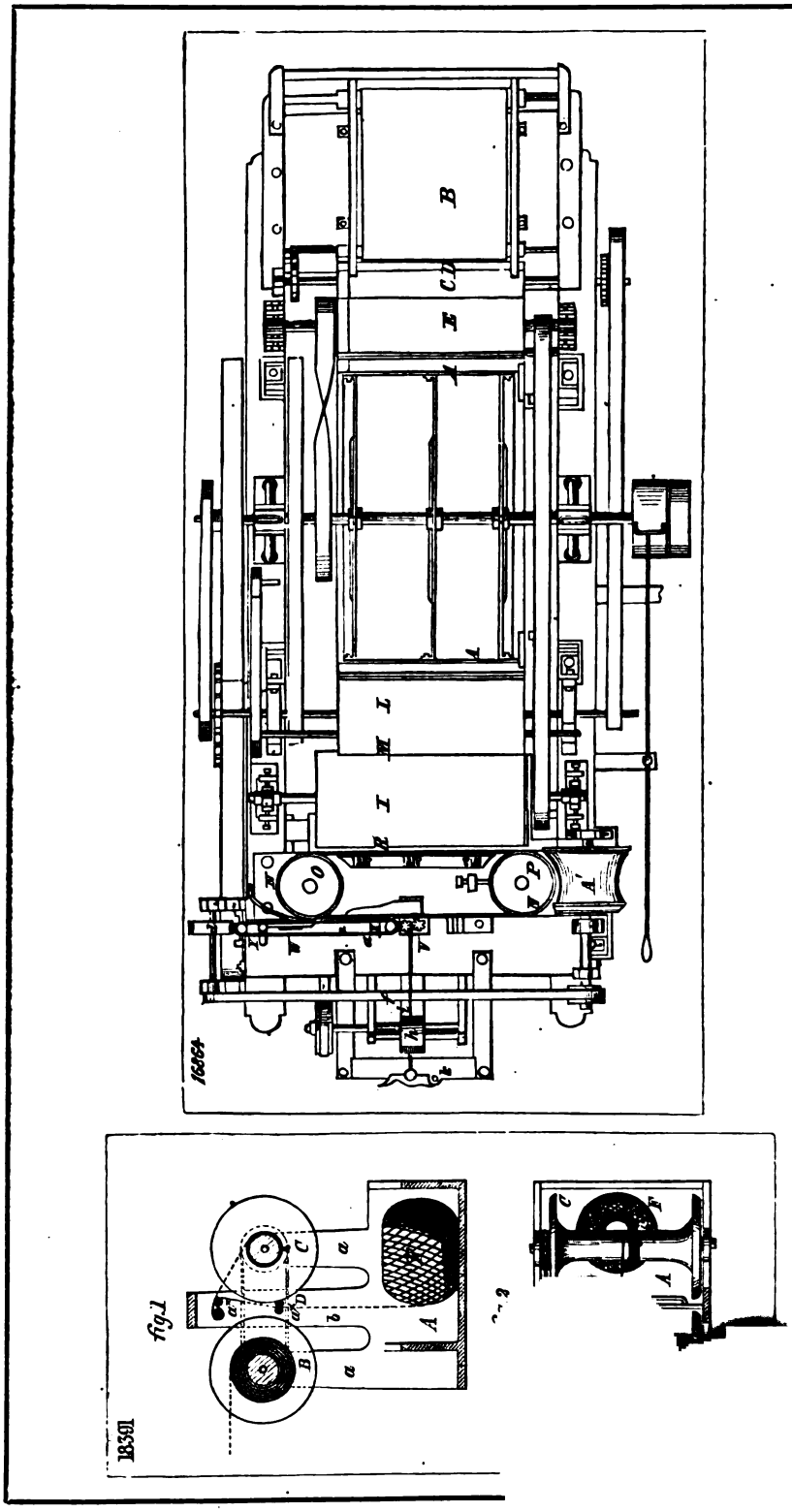
16864
fig.1
18391

16620

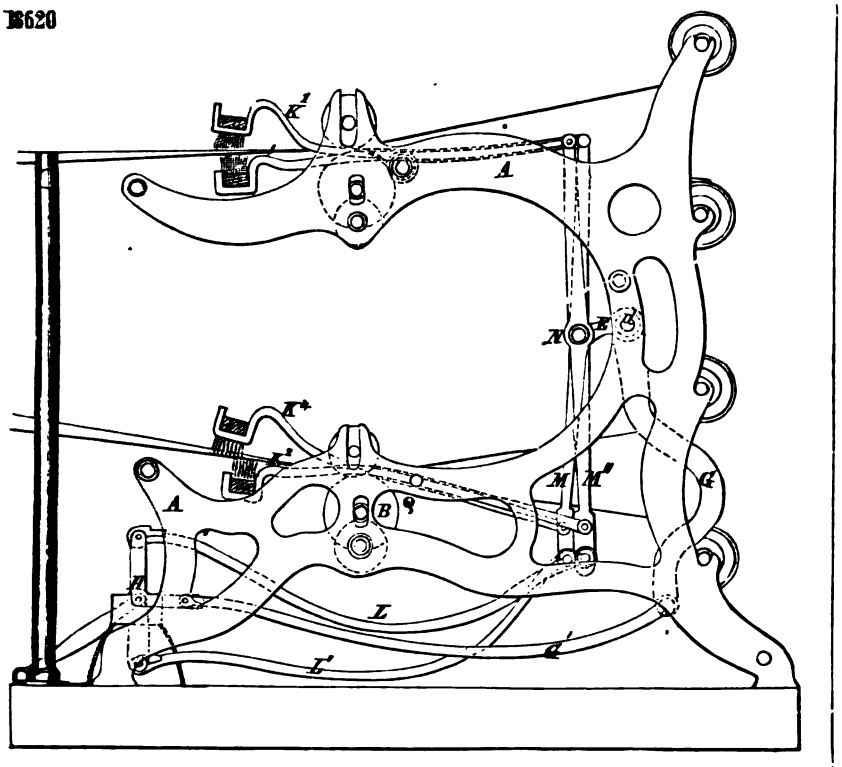

16864

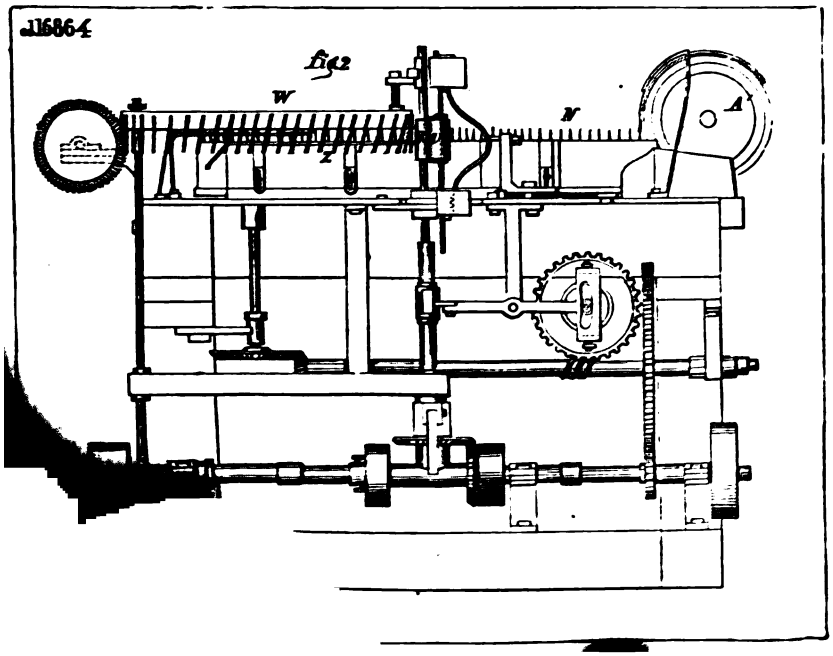

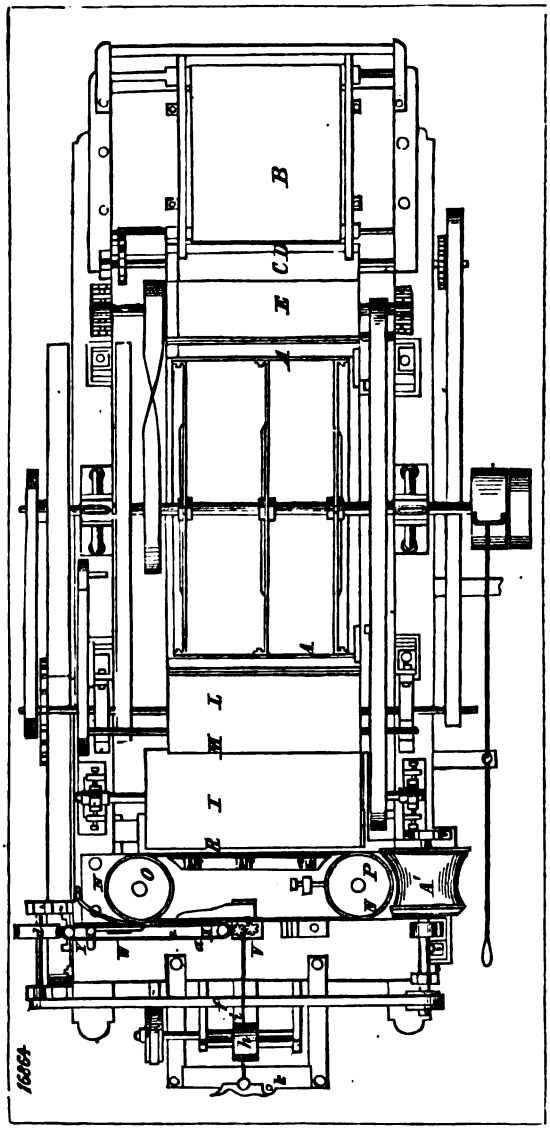
16864

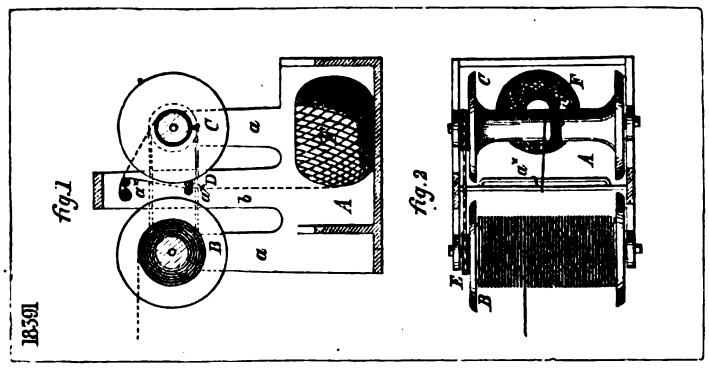
fig.1
fig.2
18391

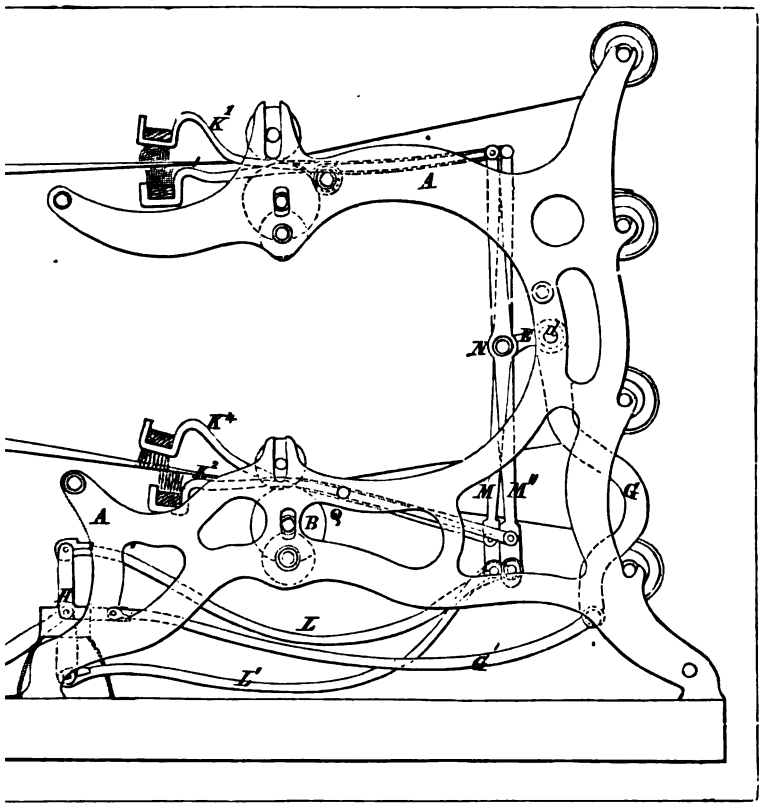
K¹
A
N
E
K⁴
K²
A
B
M
M''
G
H
L
L'
G'

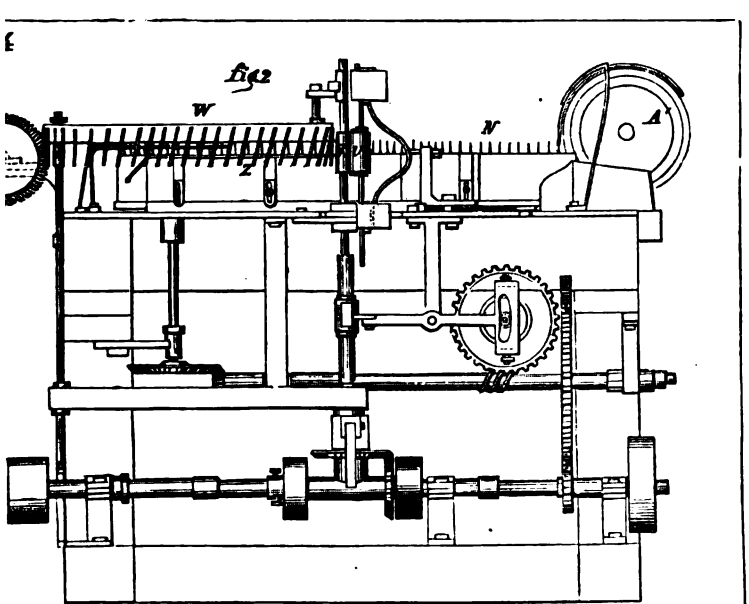
fig 2
W
N
A
Z

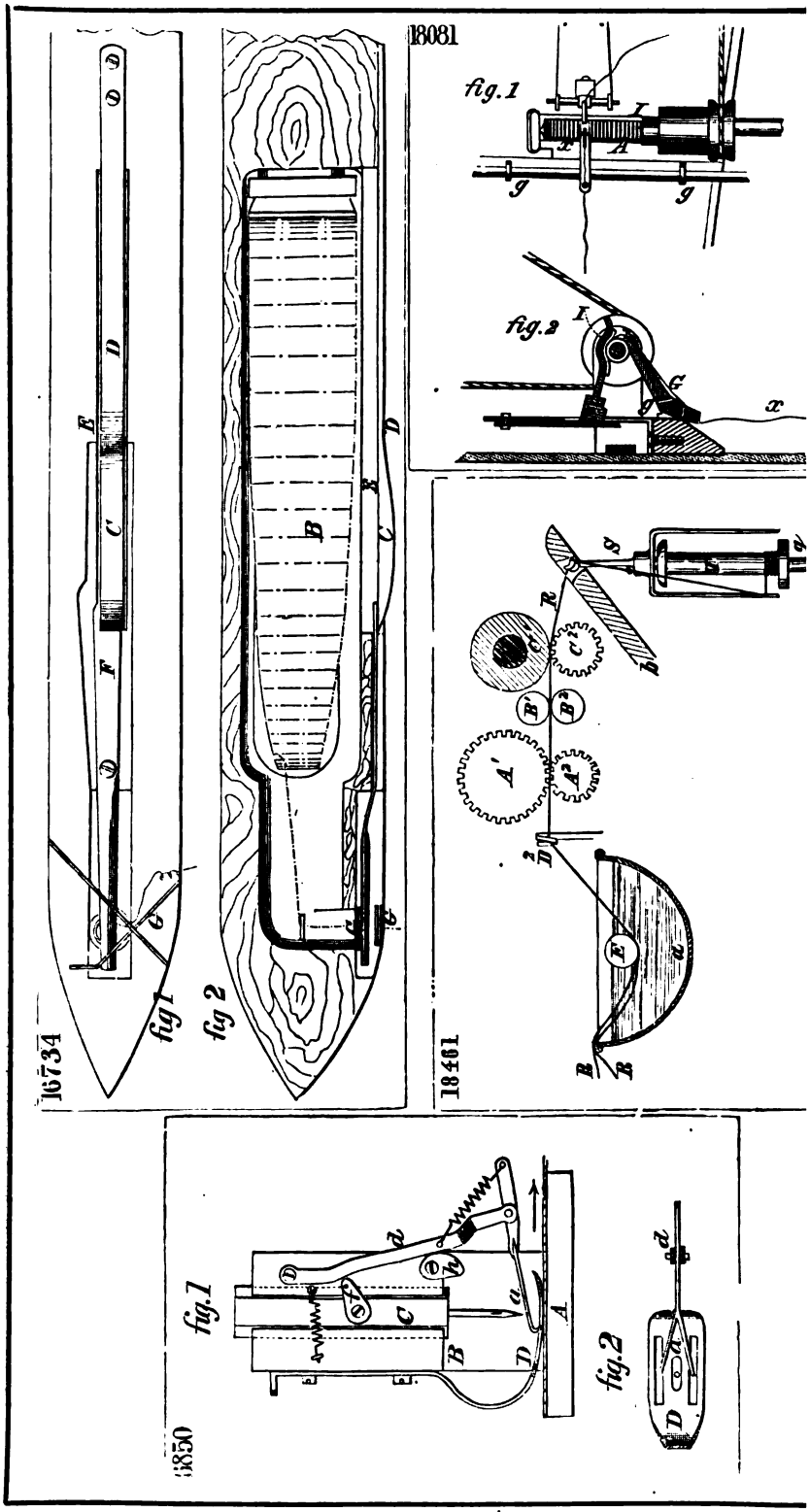
16734
fig 1
fig 2
18081
fig. 1
fig. 2
18461
18850
fig. 1
fig. 2

fig 1

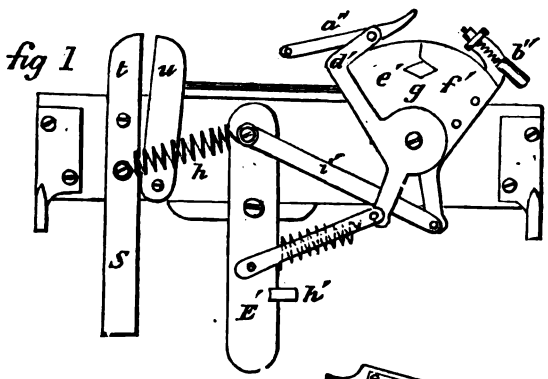

fig 2

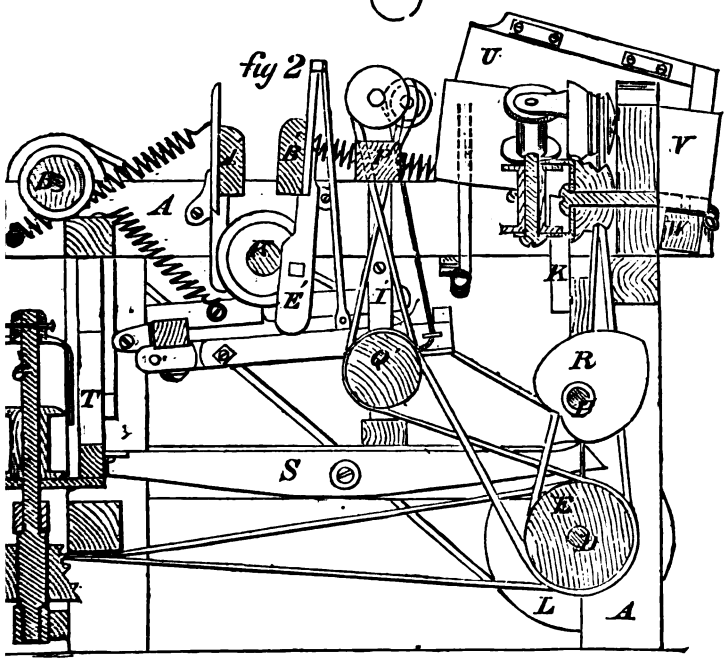

17825

fig.1

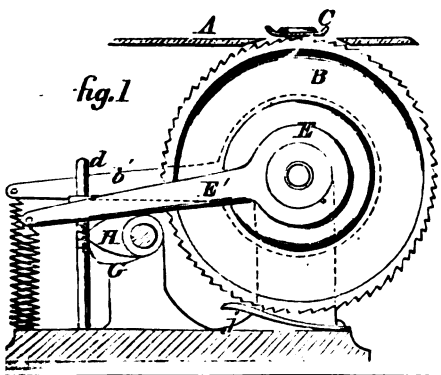

fig.2

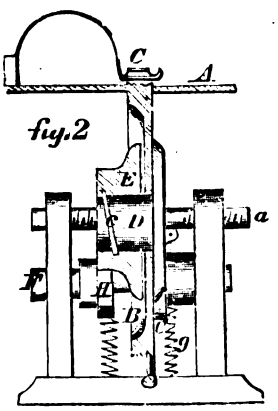

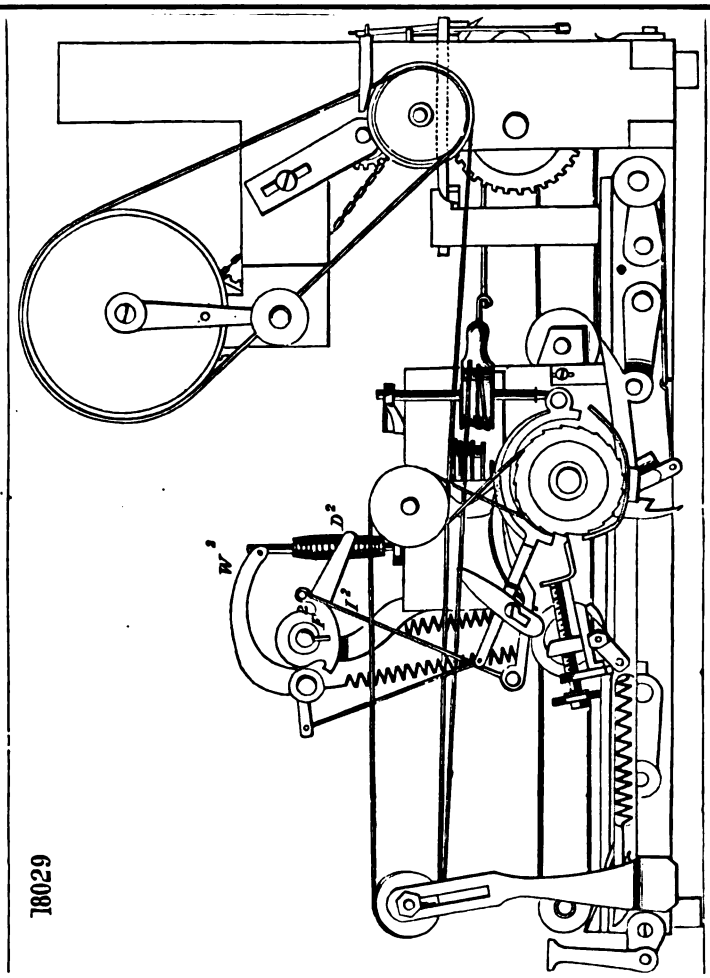

18029

18564

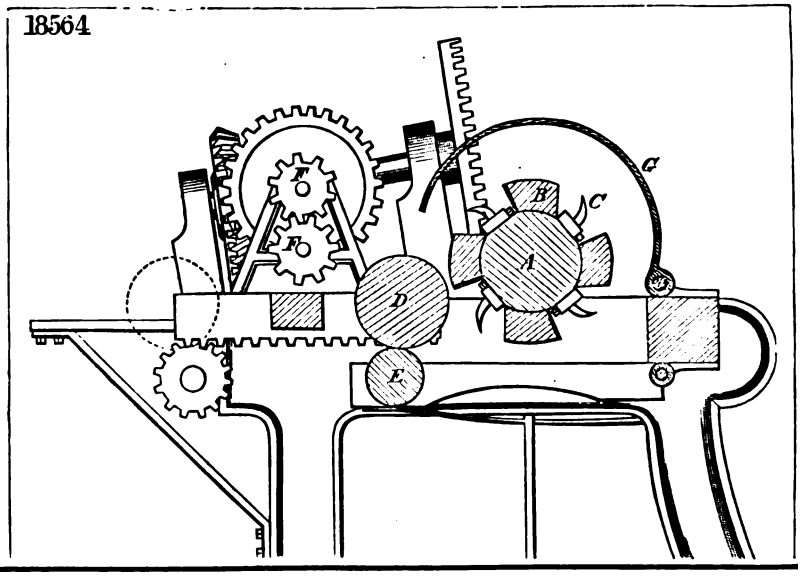

7

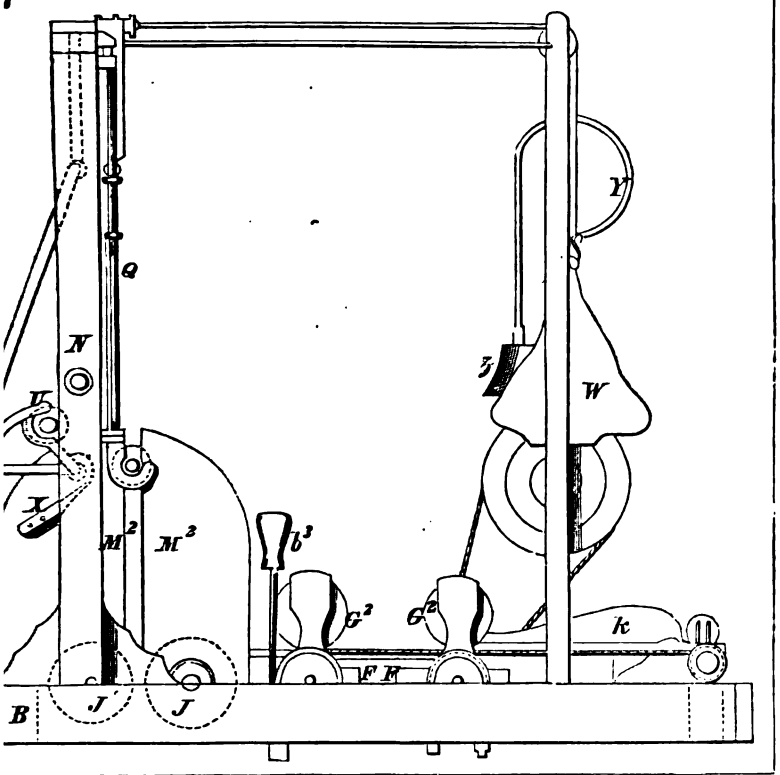

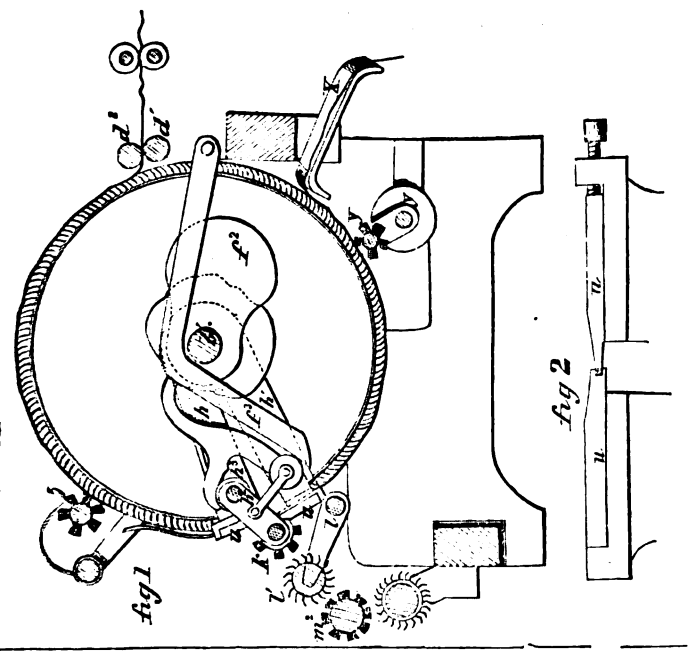

172.44.

16622

fig.1

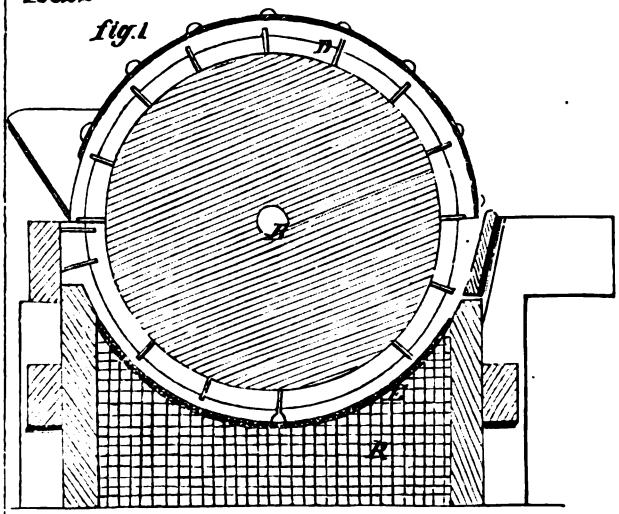

fig.2

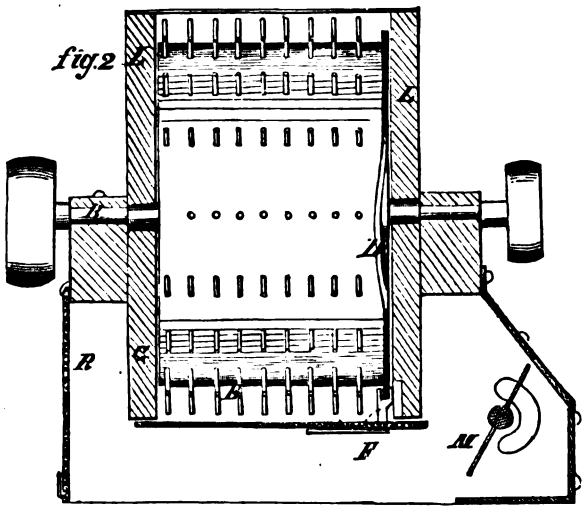

18072

fig.1

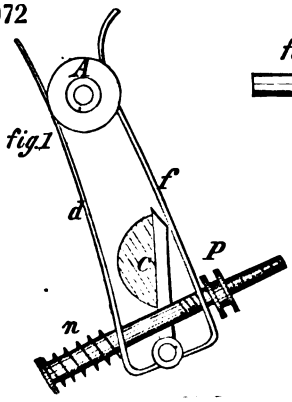

fig.2

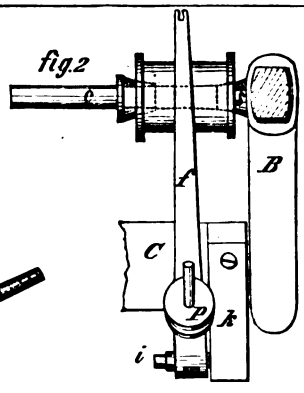

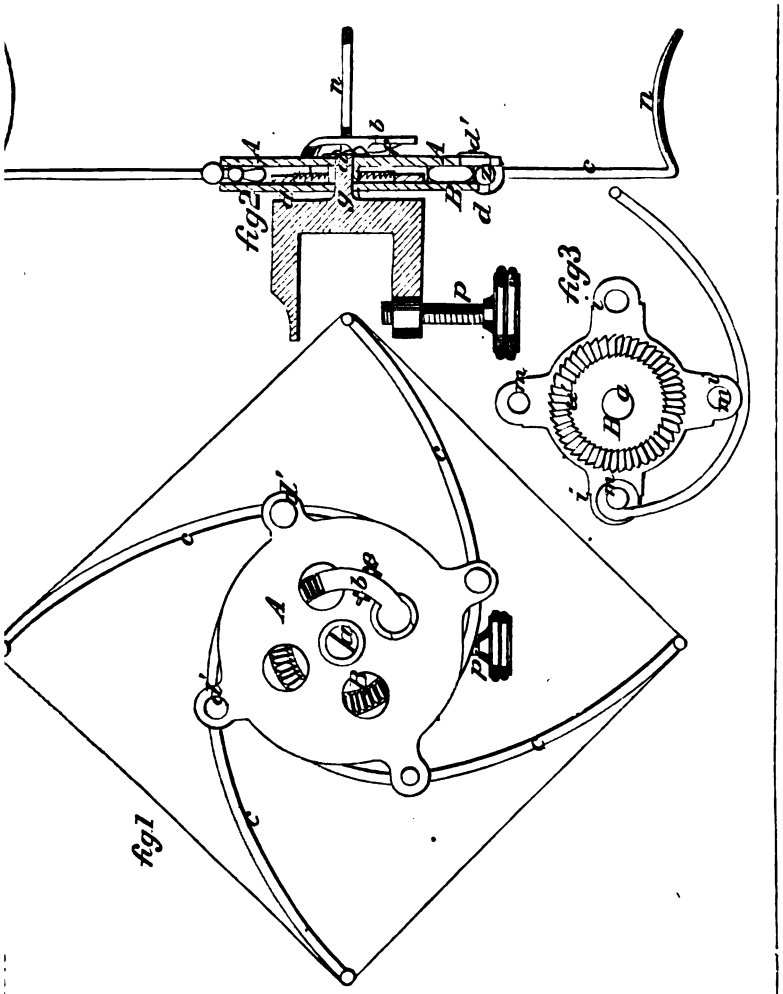

16463

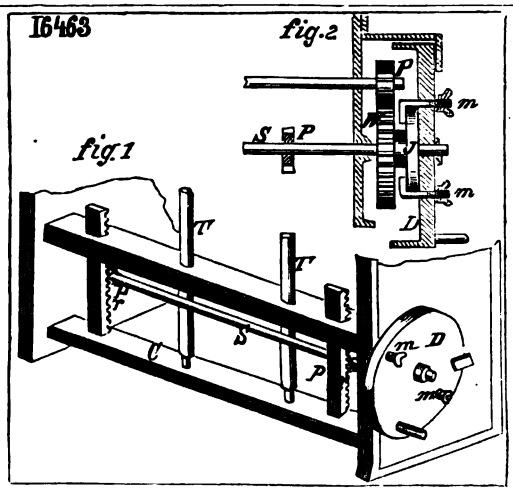

16879

fig.1

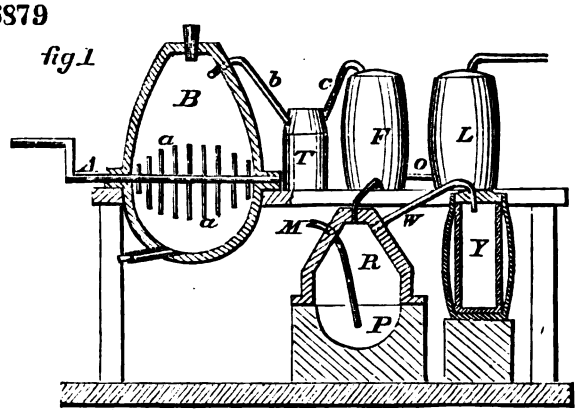

fig 2

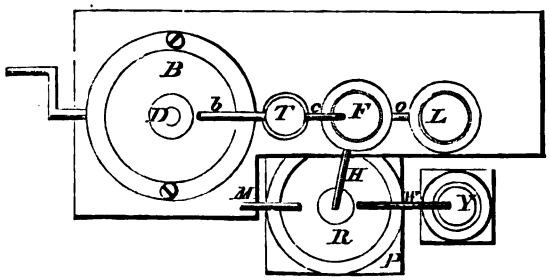

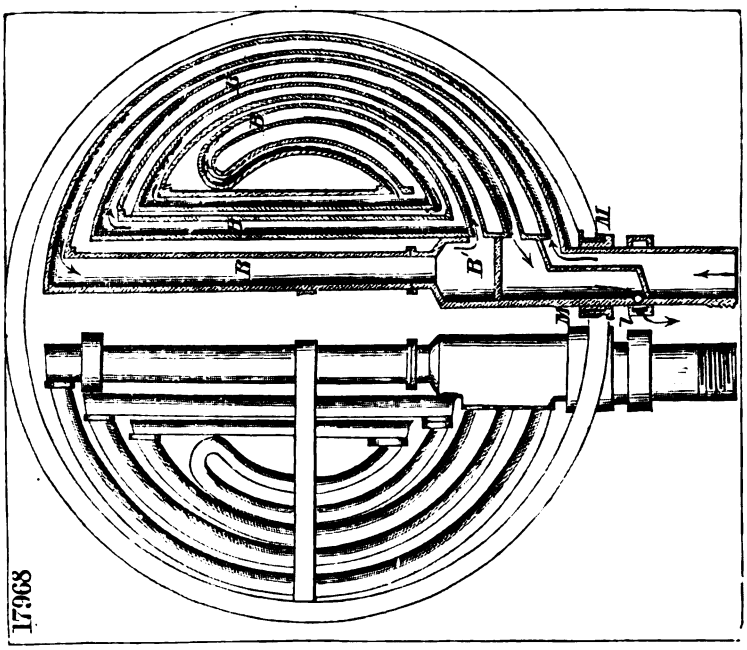

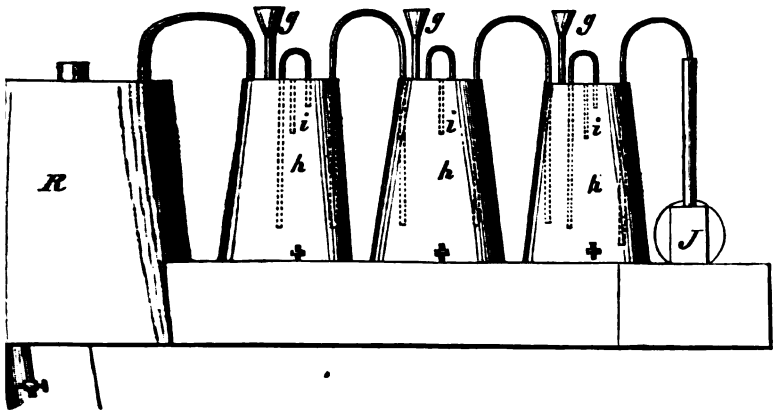

201

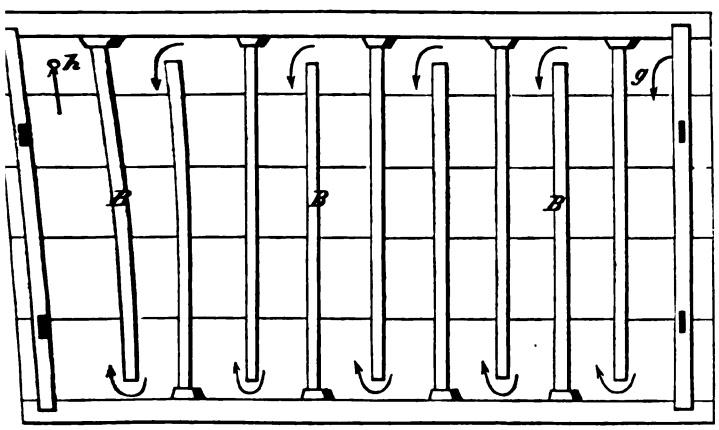

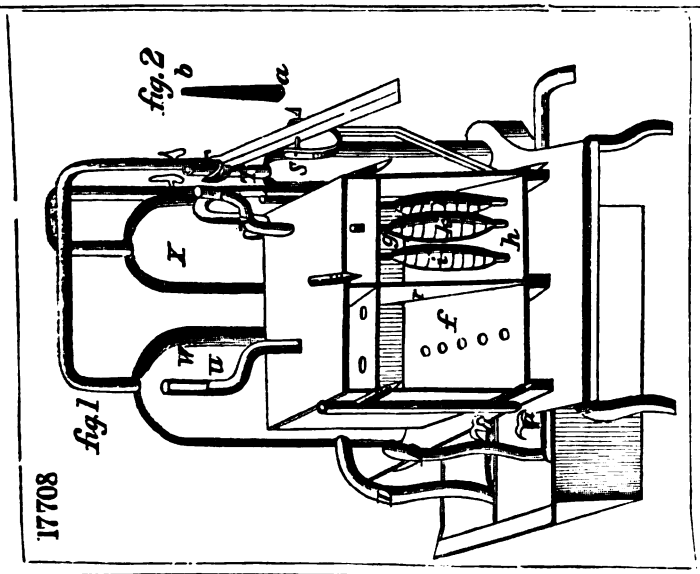

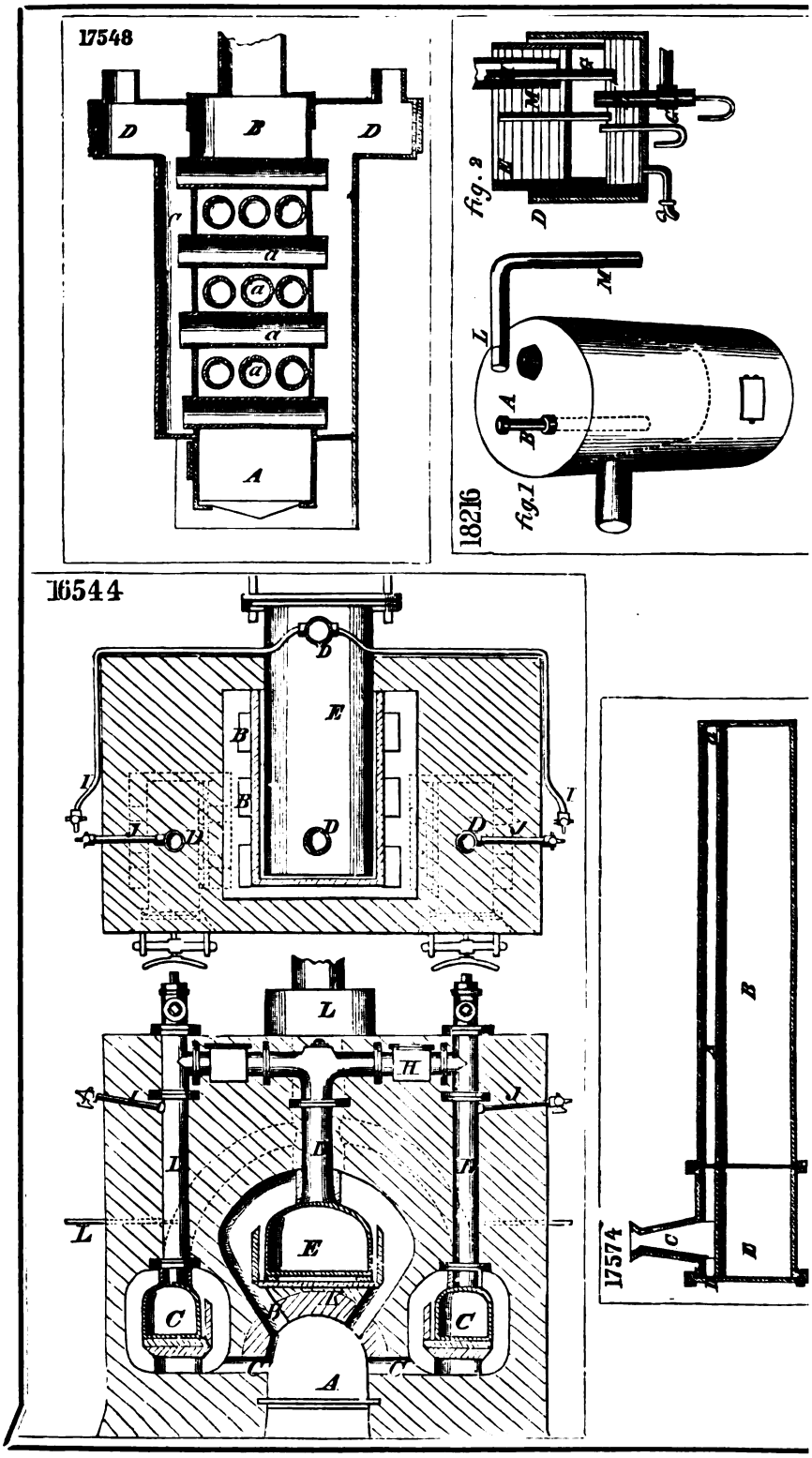
17548
18216
fig. 1
fig. 2
16544
17574

18215.

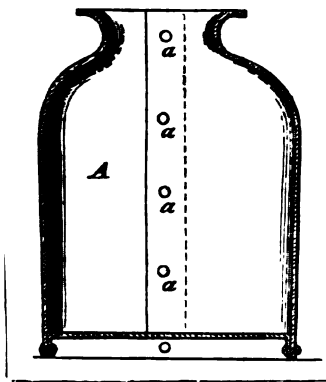

17599

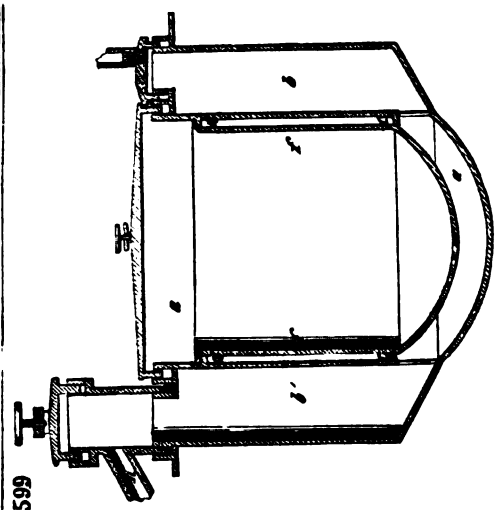

17704

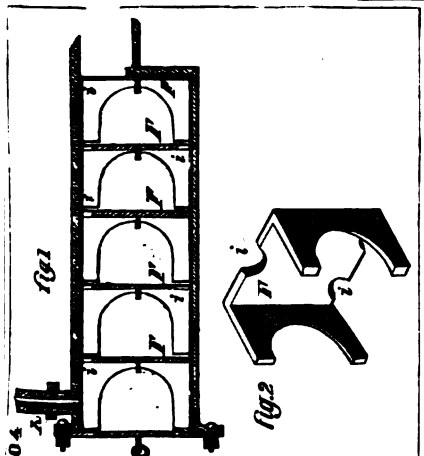

17614

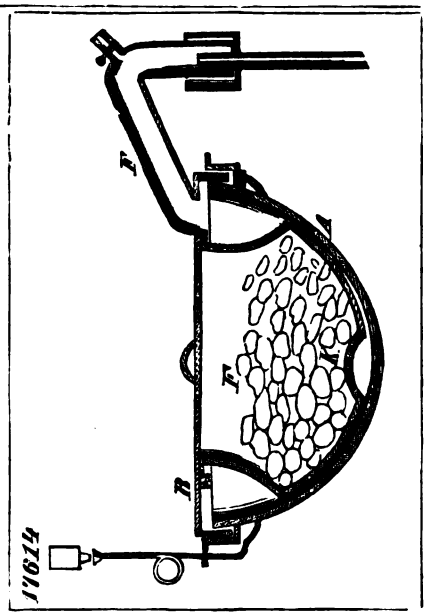

17981

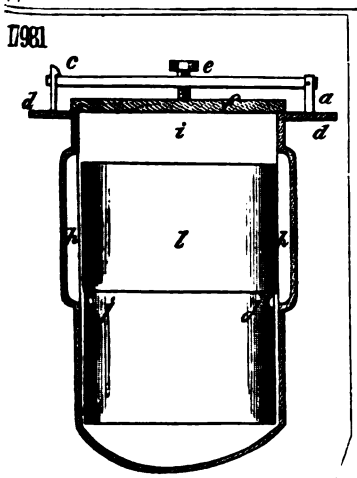

16651

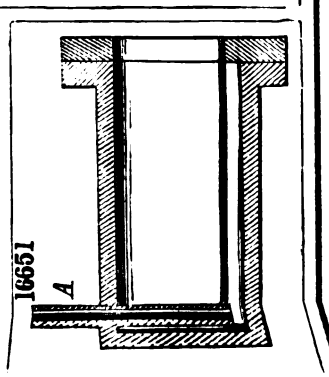

18109

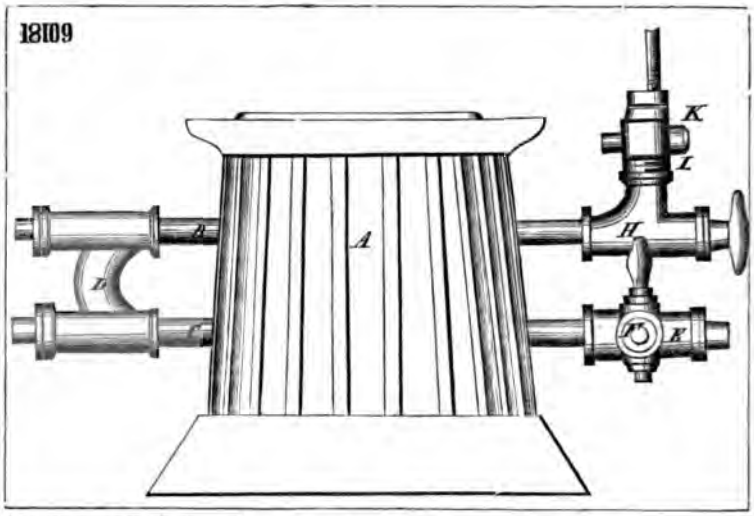

17435

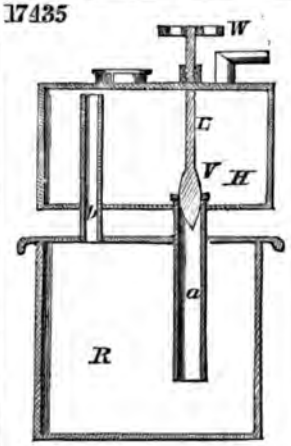

18648

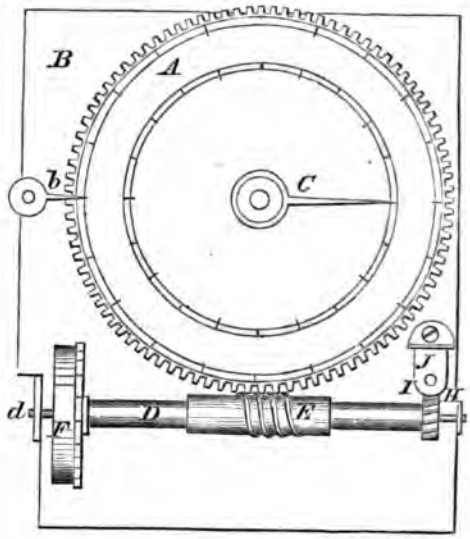

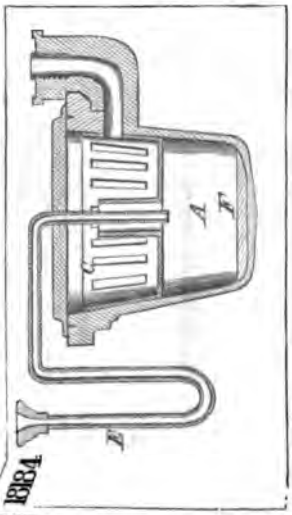

1884

16682.

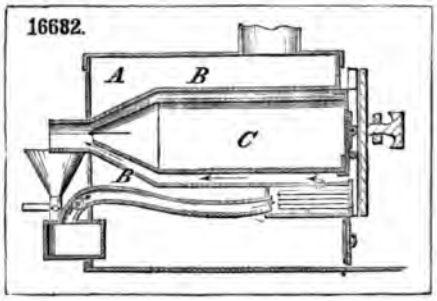

65

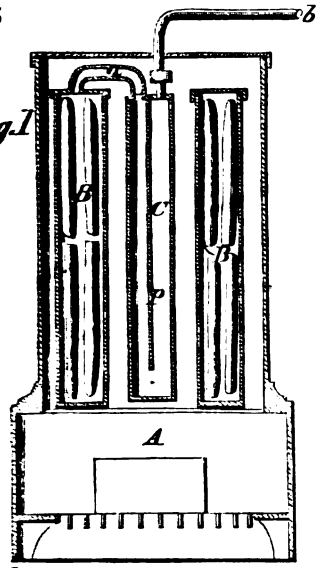

fig. 1

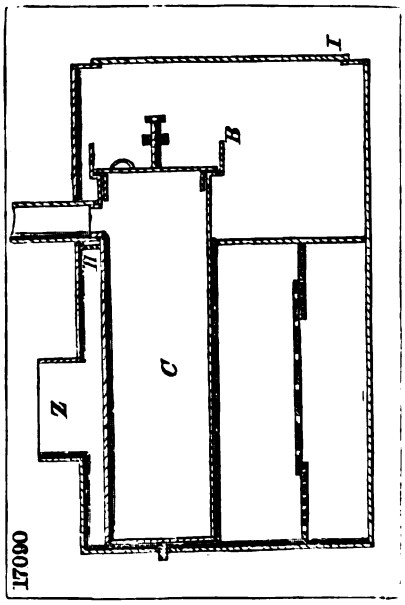

fig 2

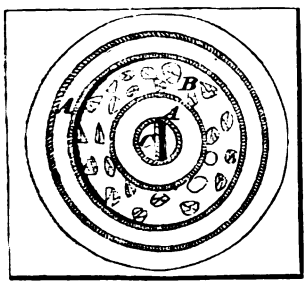

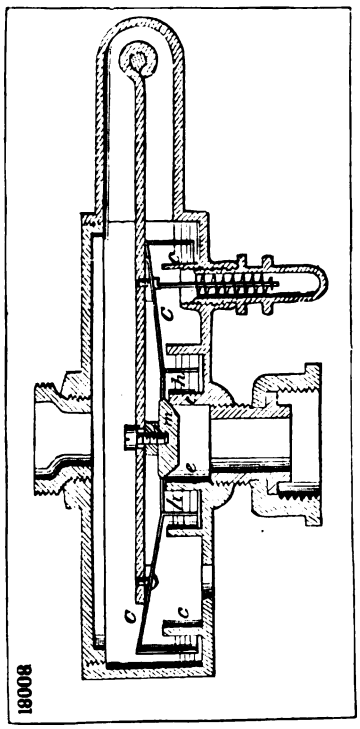

3414

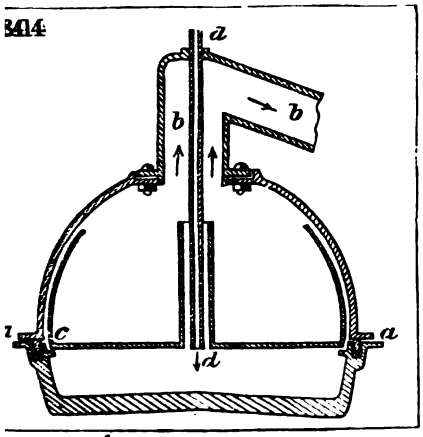

16922

fig 1

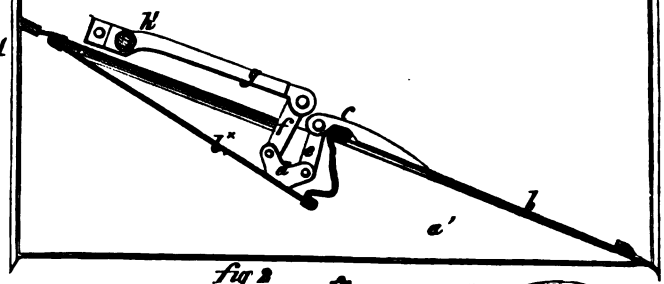

fig 2

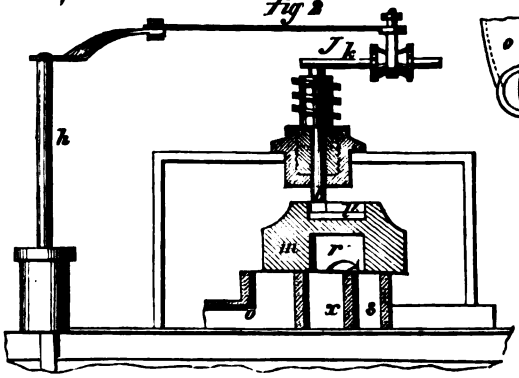

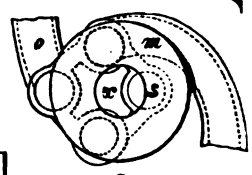

fig 3

16951

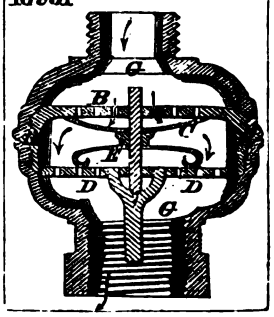

16639

fig. 1 fig. 2

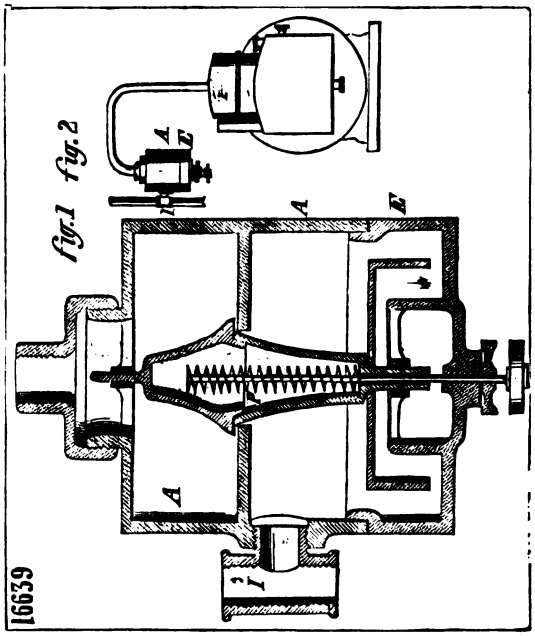

18154

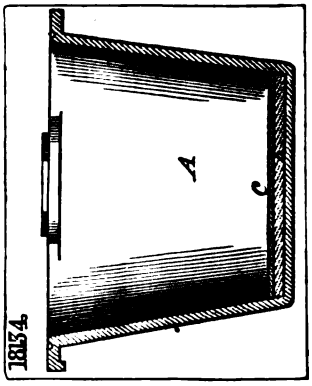

7079

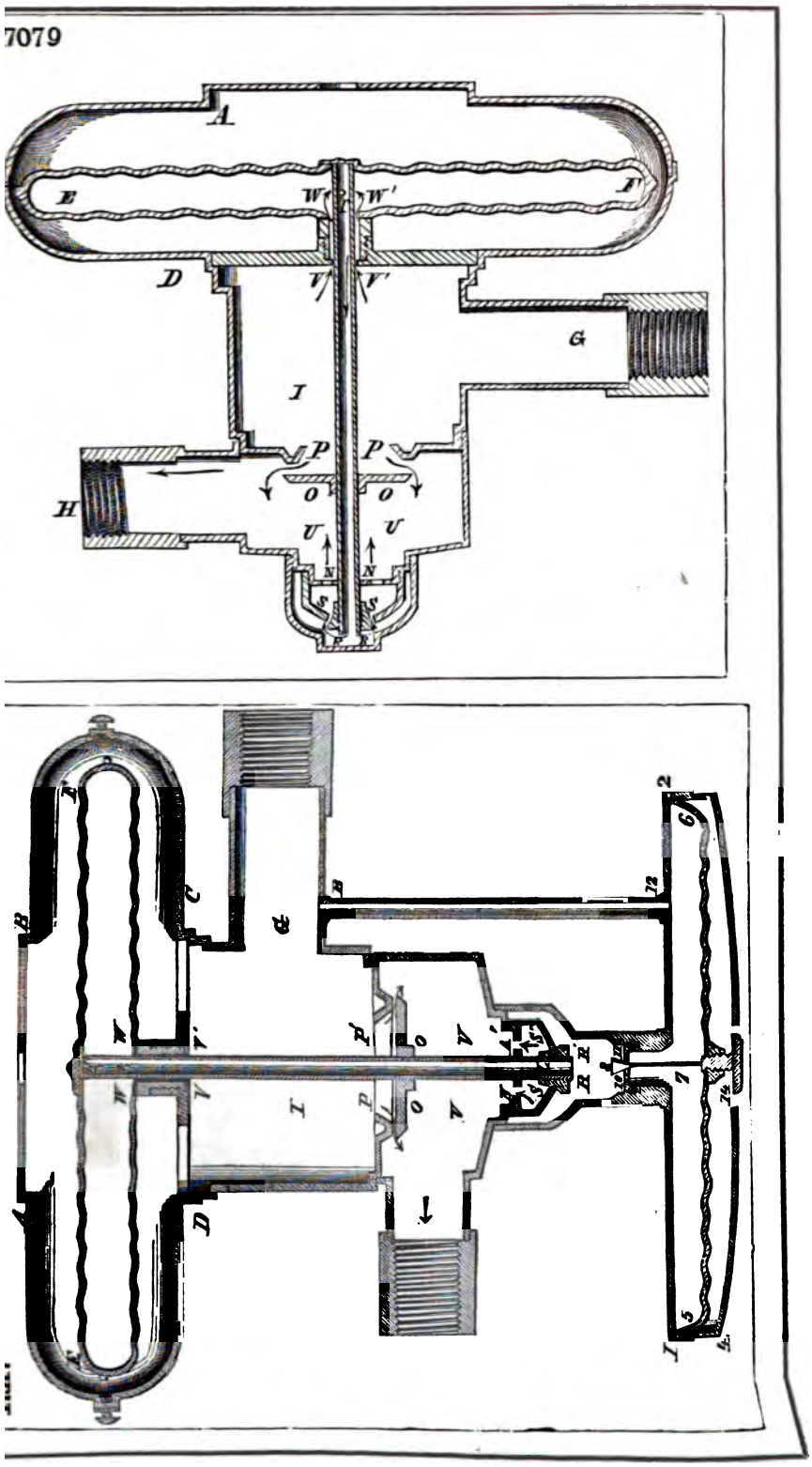

17936

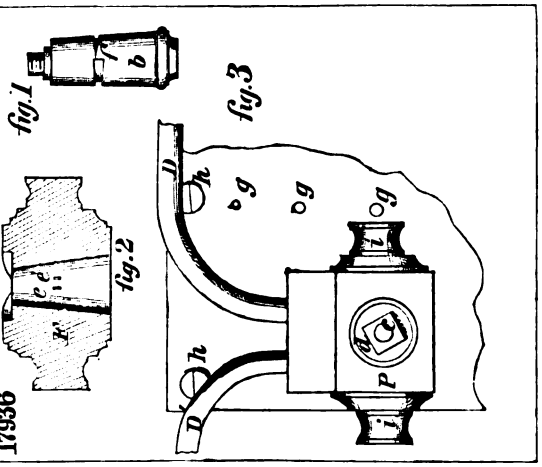

17671

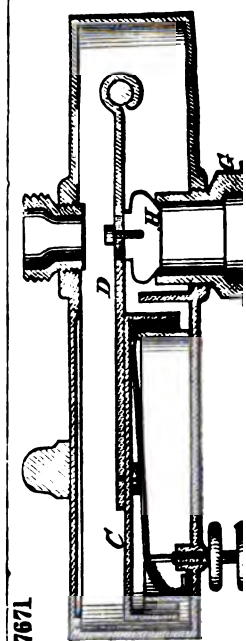

18926

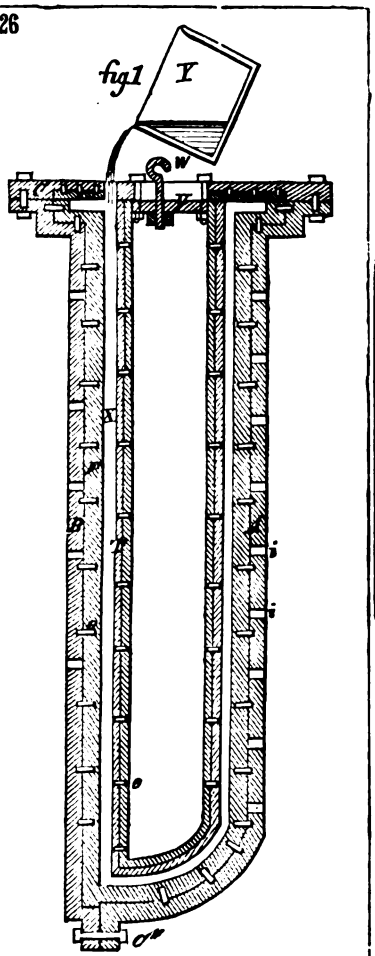

18103

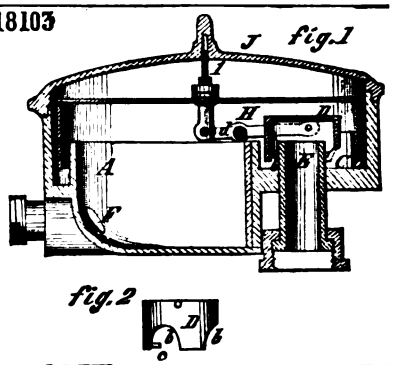

Add 18926

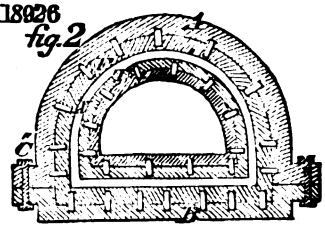

791

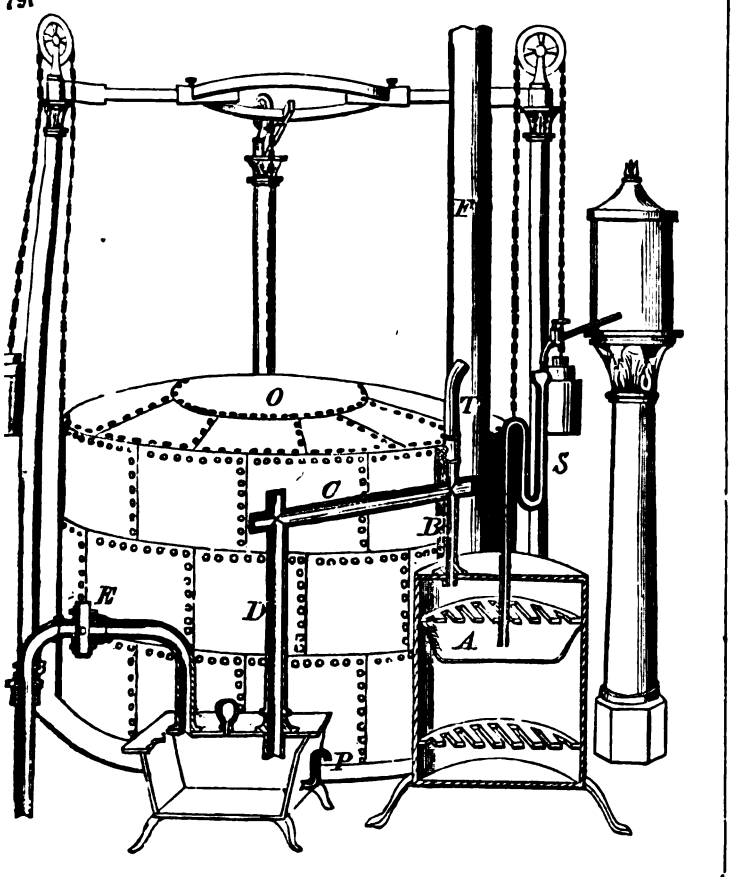

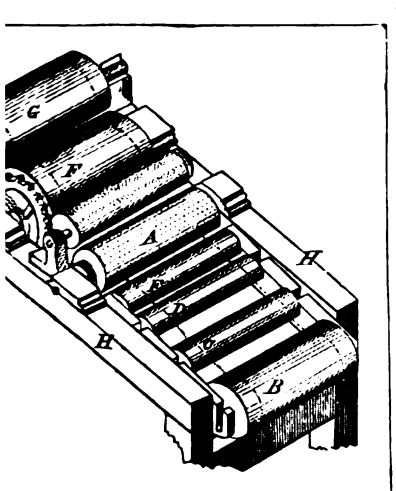

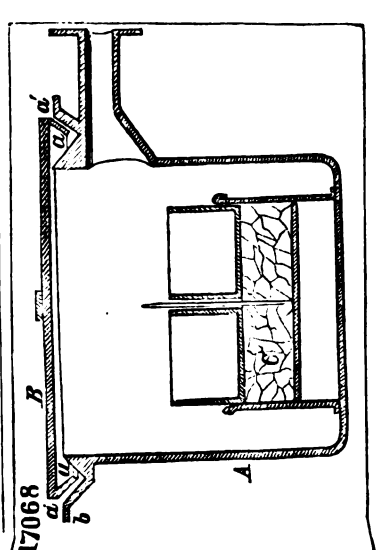

17068

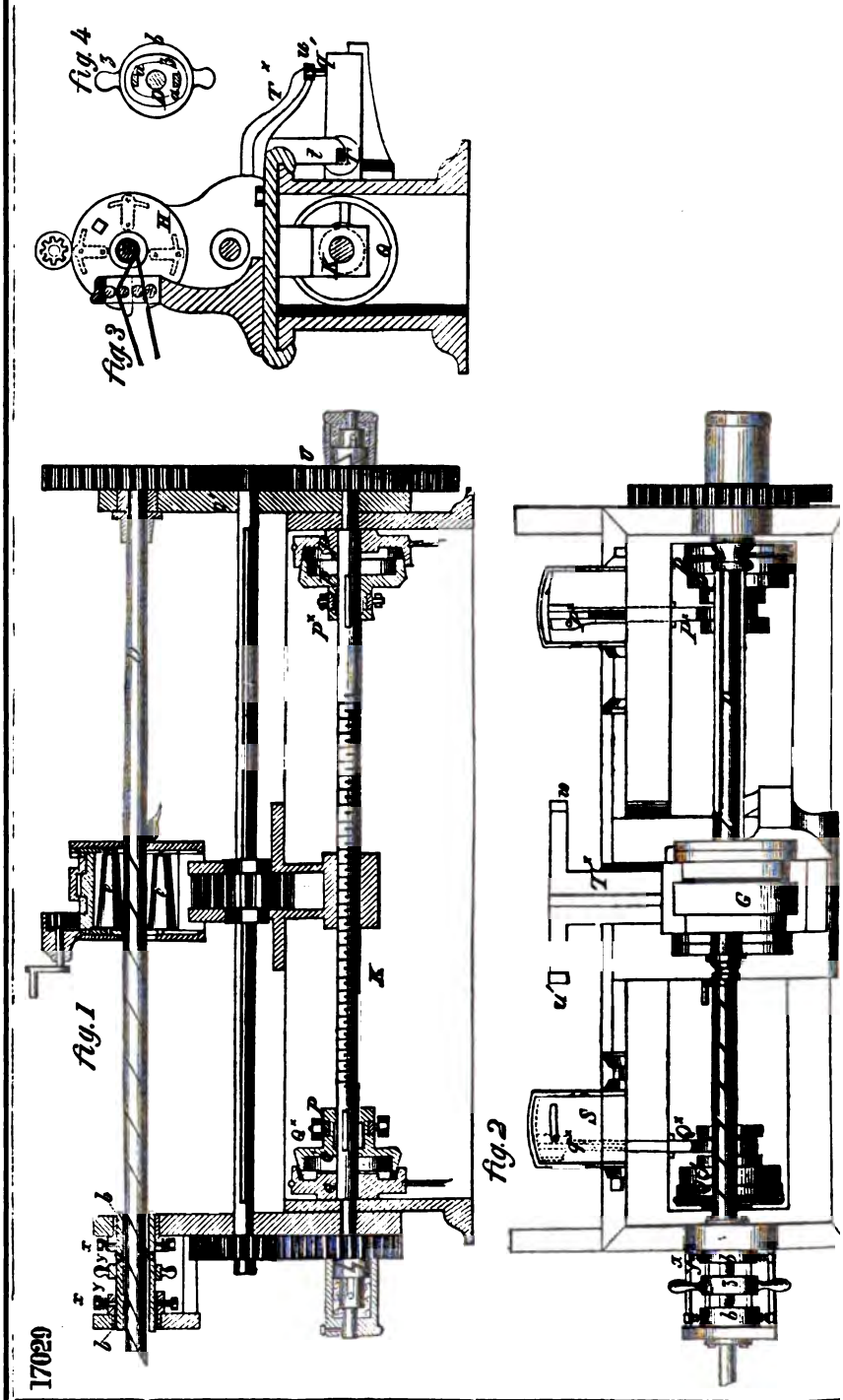
Fig 4
Fig 3
Fig 1
Fig 2
17029

18154.

fig. 1

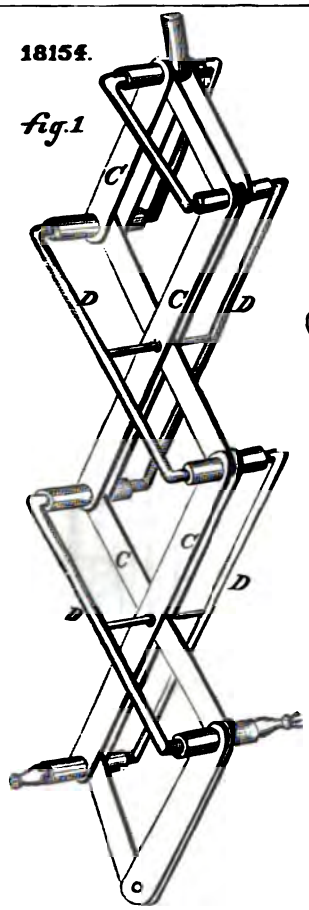

fig. 2

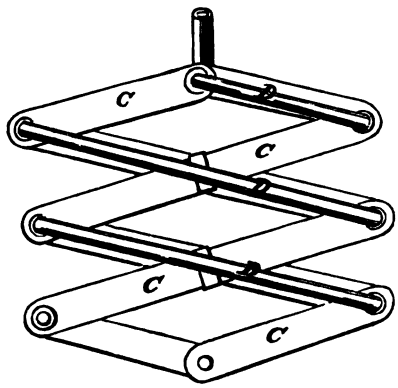

984

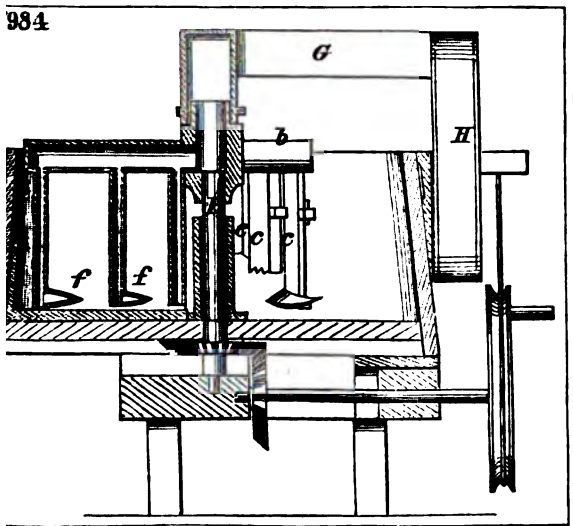

16480

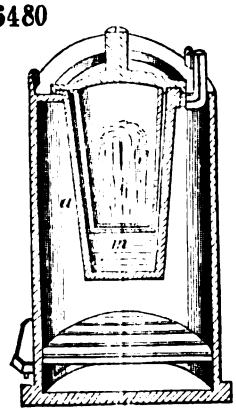

18622 *fig.1*

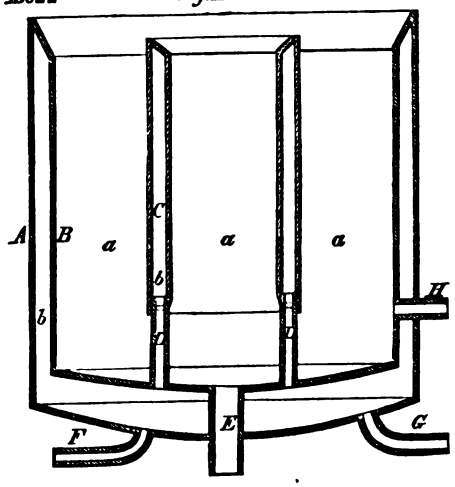

fig.2

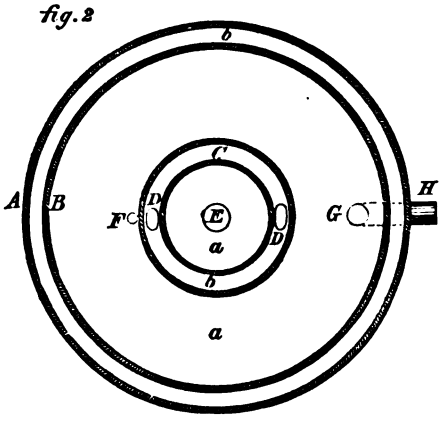

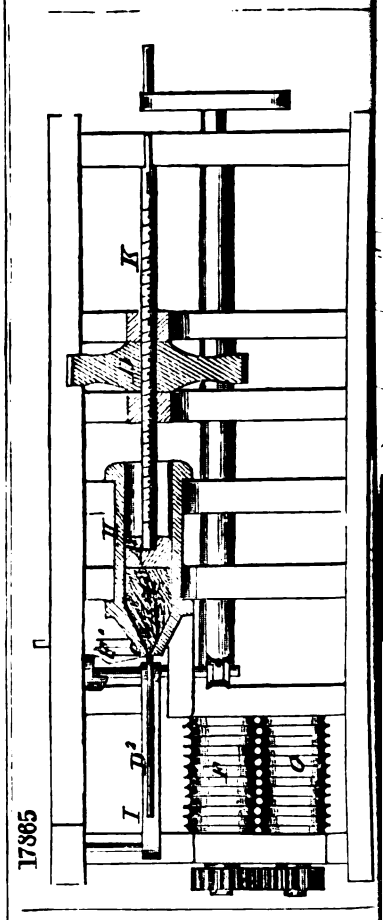

18830 *fig 1*

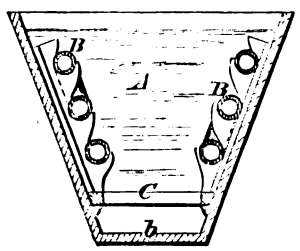

fig.2

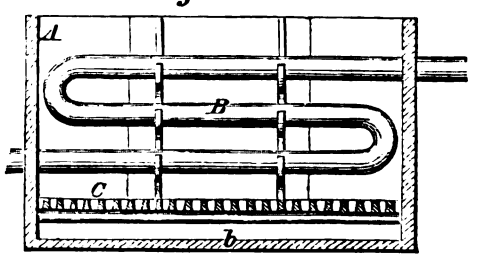

16766

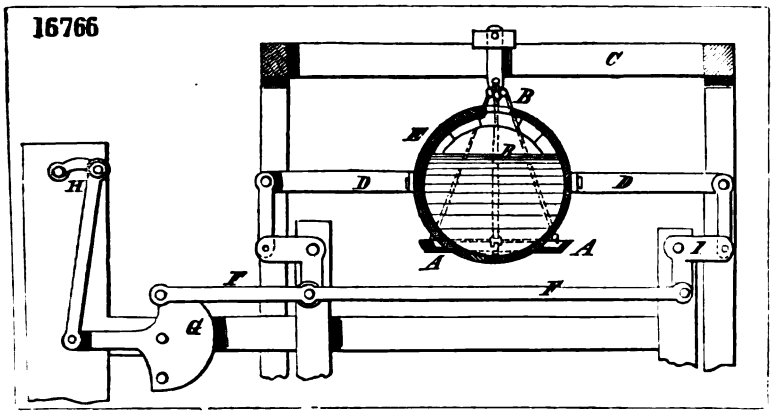

17409

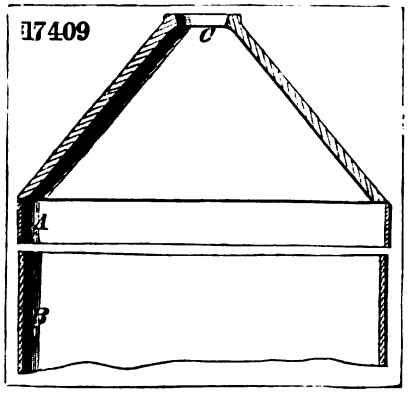

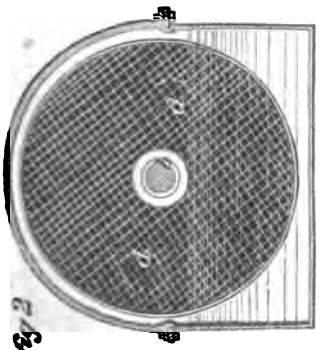

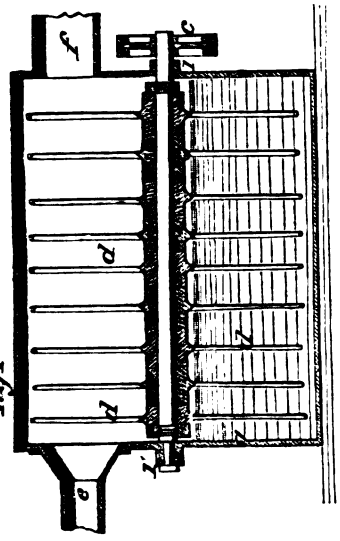

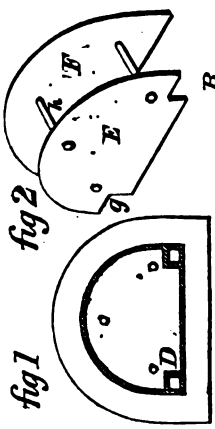

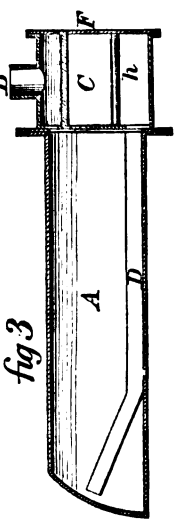

16830

17519

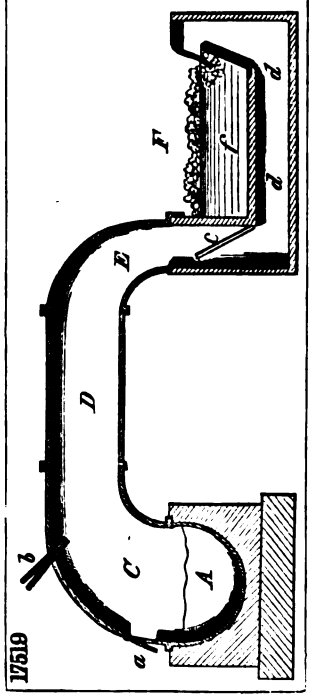

17933

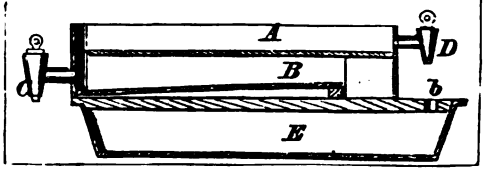

16362

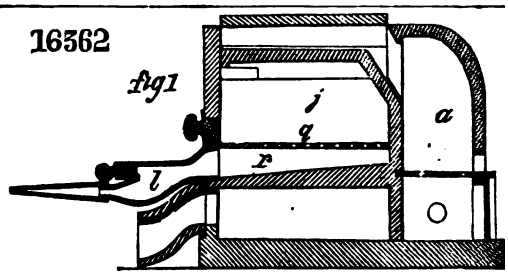

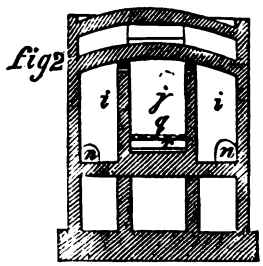

18094

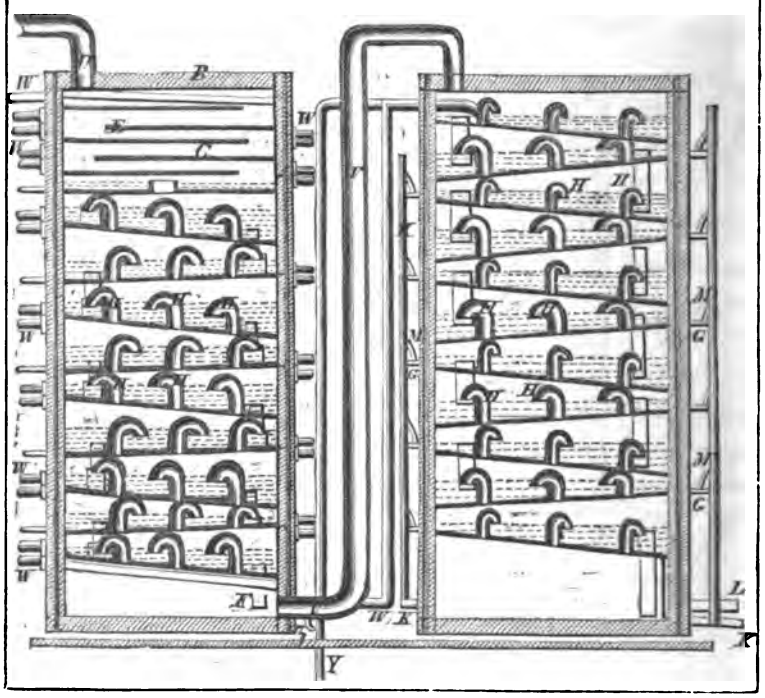

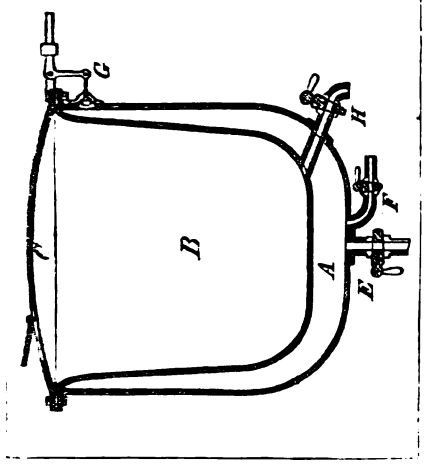

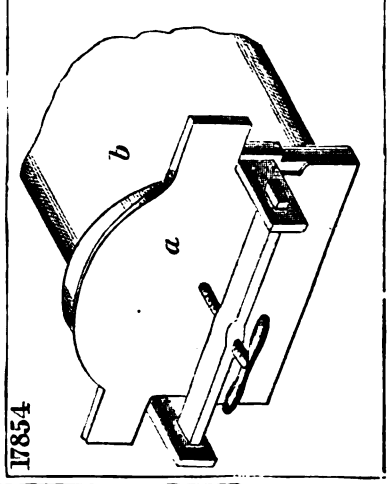

17854

172

fig.1

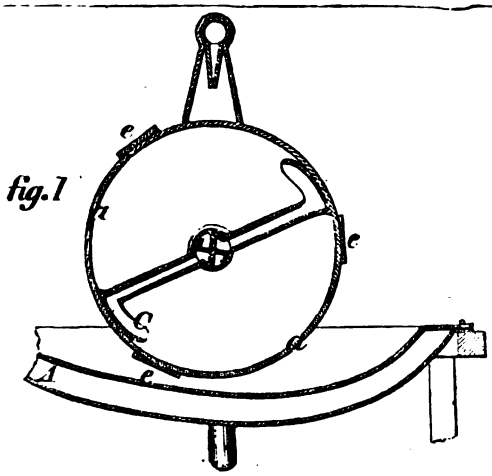

fig.2

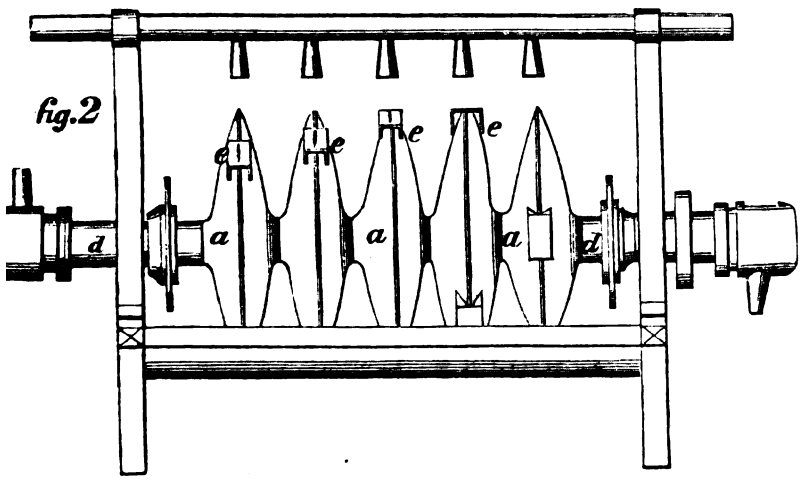

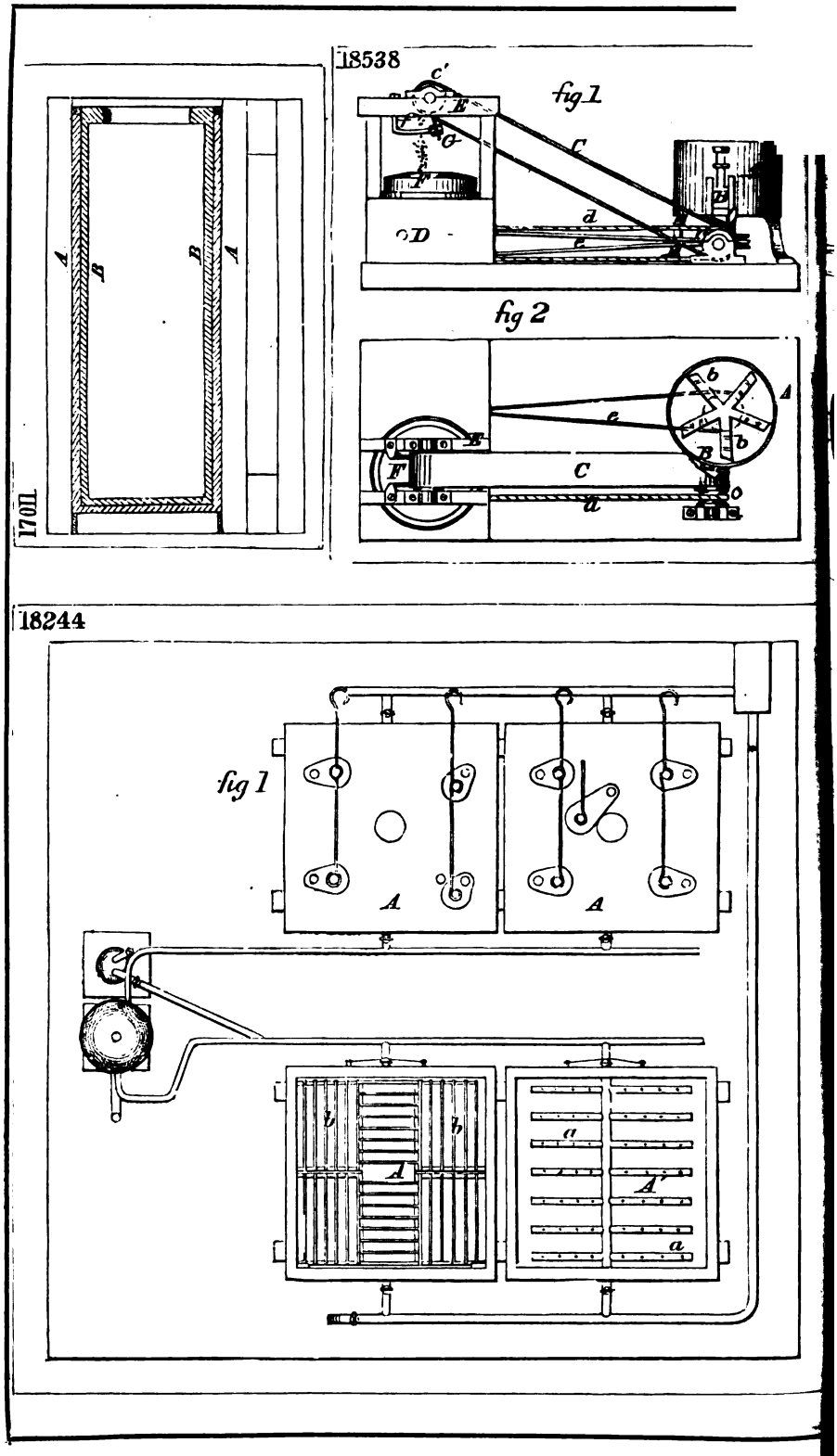
17011
18538
fig 1
fig 2
18244
fig 1

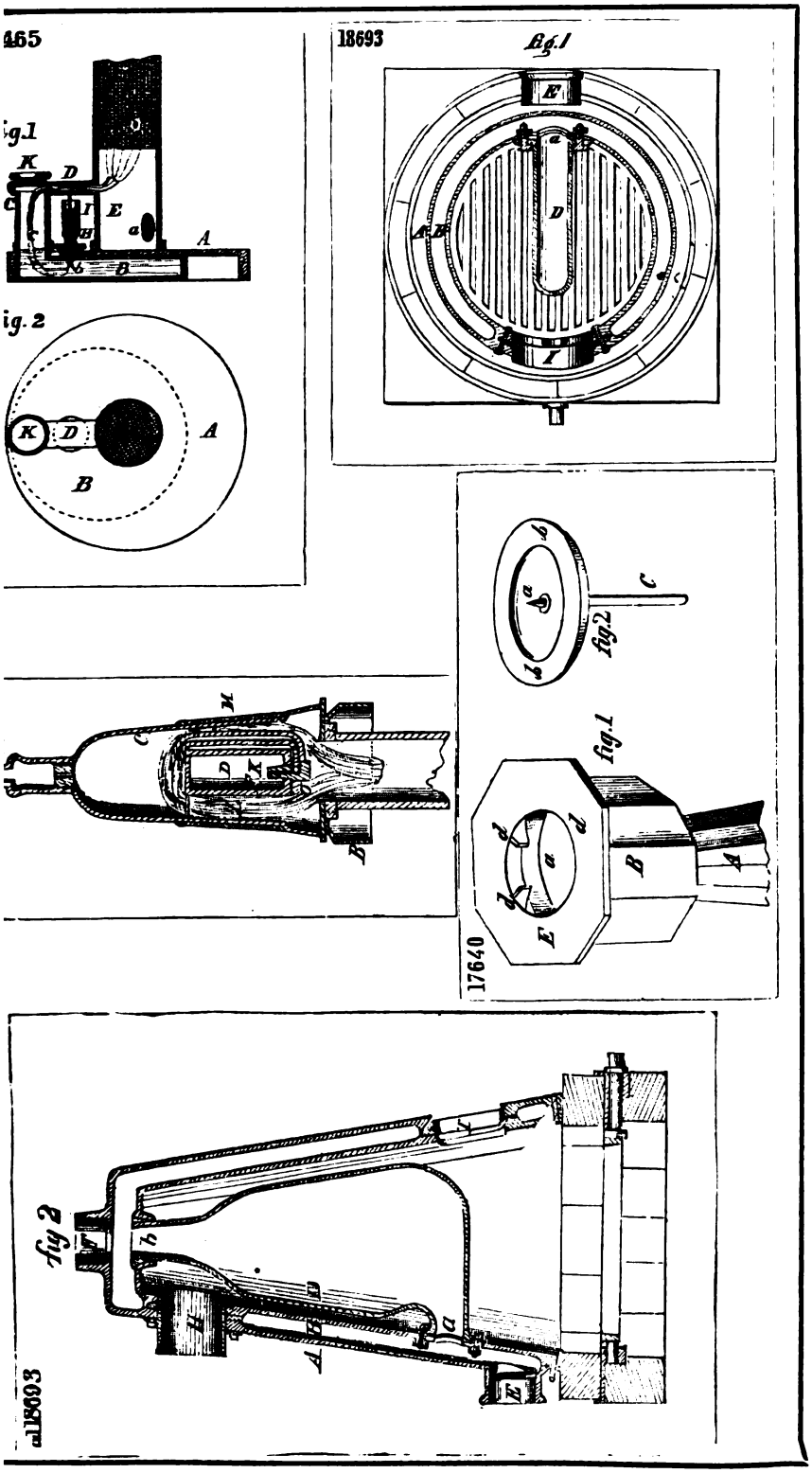
465
ig.1
ig.2
18693
fig.1
fig.2
fig.1
17640
fig 2
18693

17077

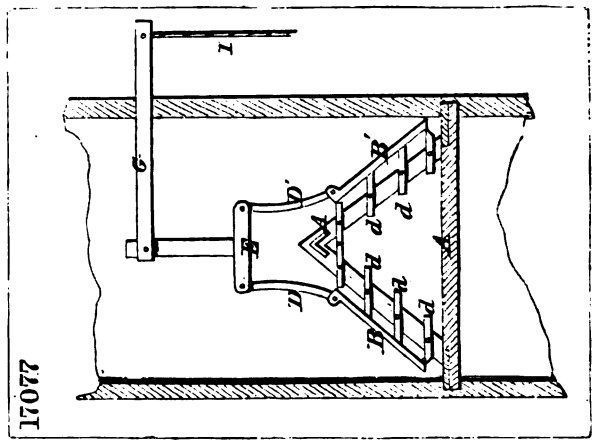

17916

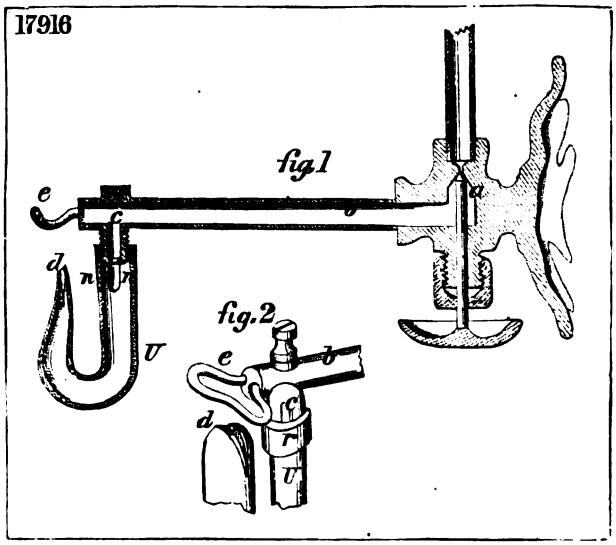

17727

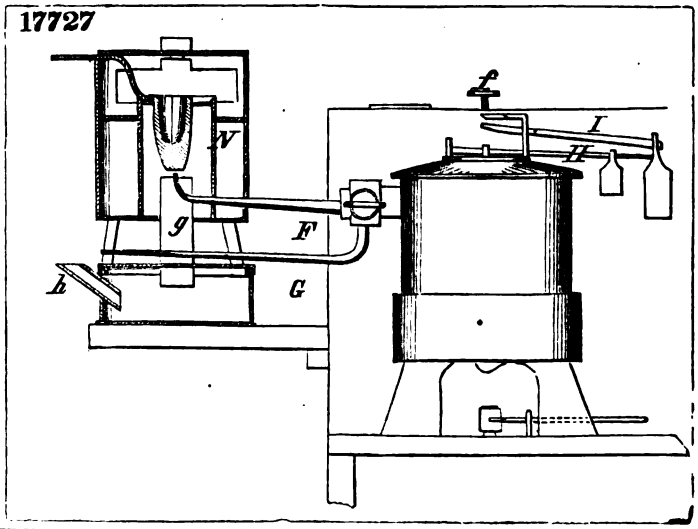

18100

fig. 1

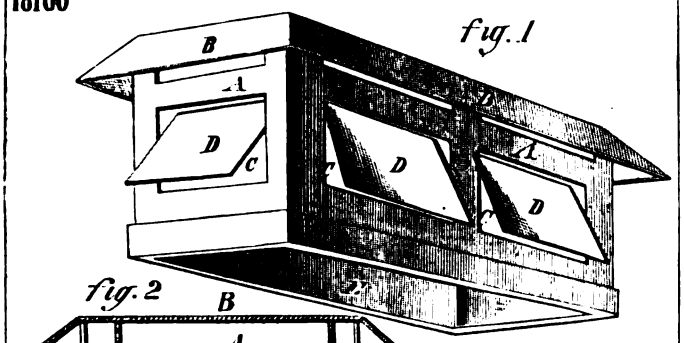

fig. 2

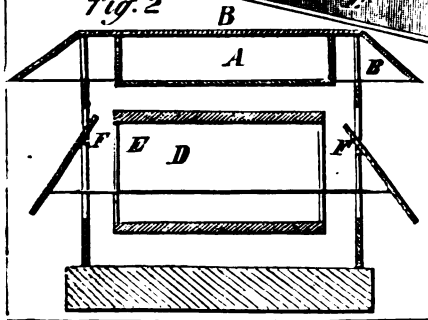

16644

fig. 1.

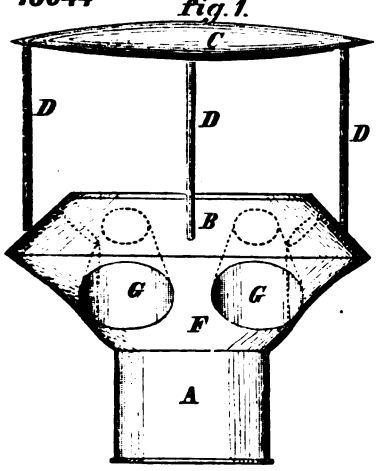

fig. 2.

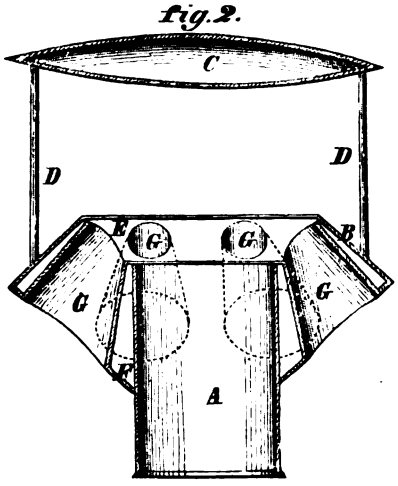

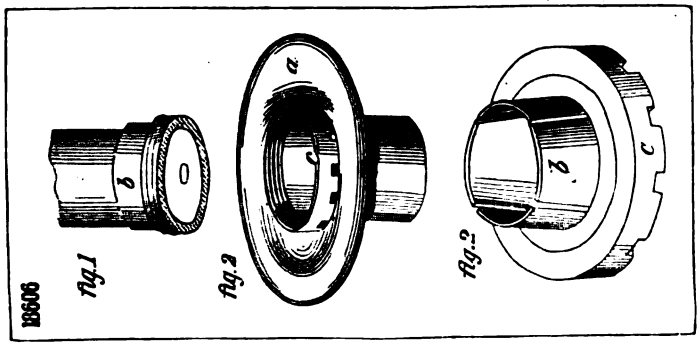

18501

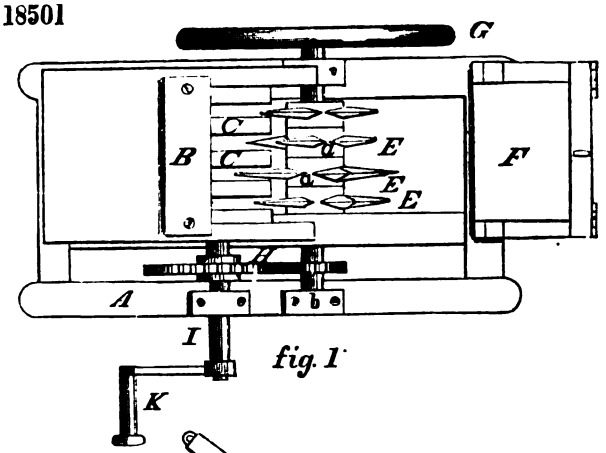

fig. 1

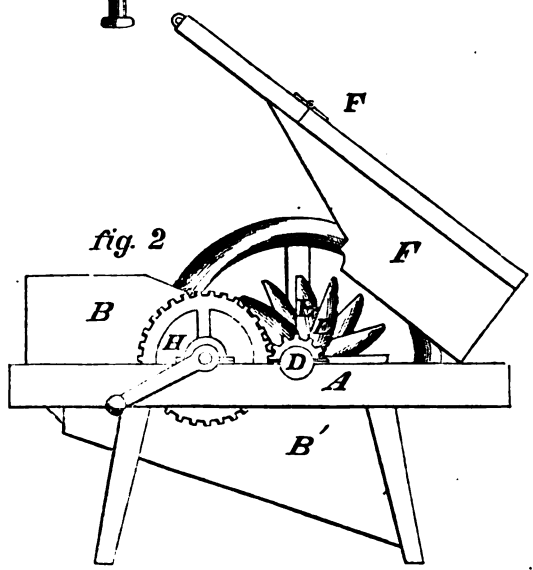

fig. 2

18390

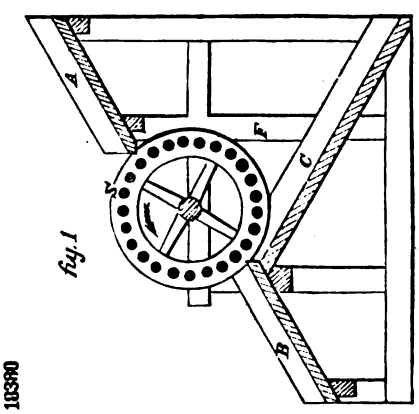

fig. 1

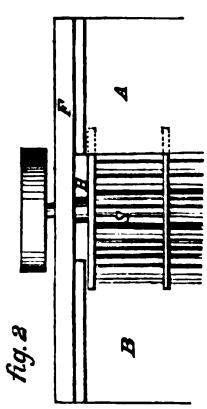

fig. 2

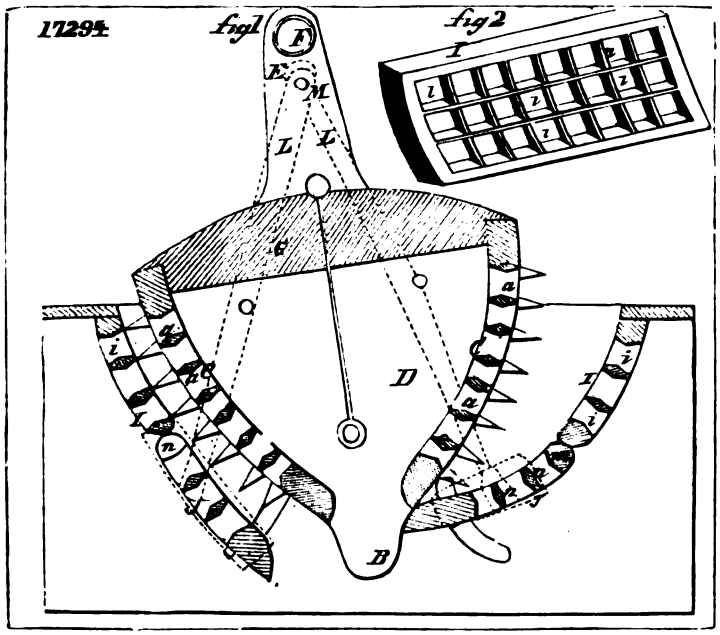
17294
fig1
fig2
F
E
M
L
L
G
D
B
I
a
i
n

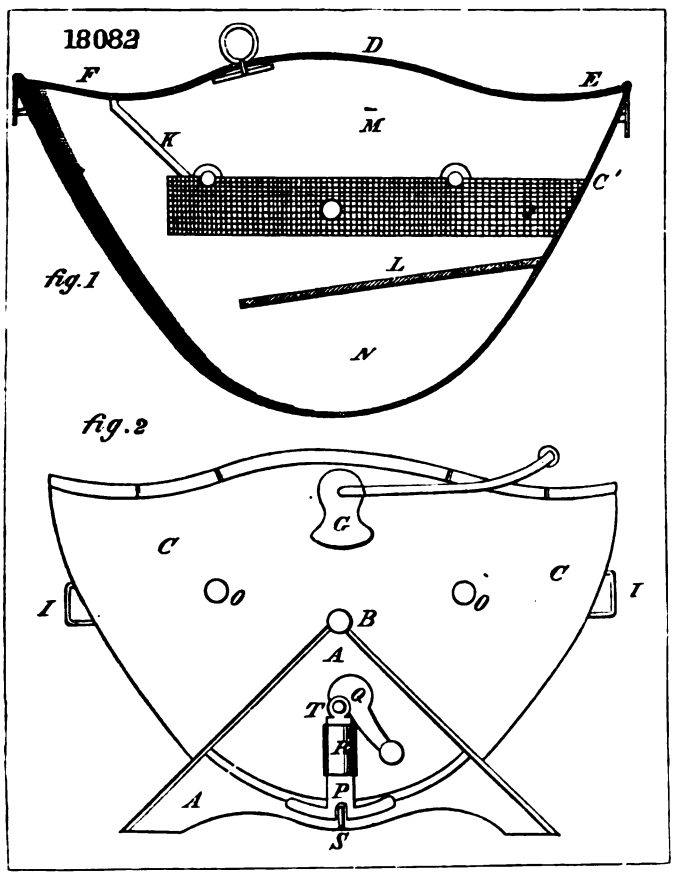
18082
D
F
E
M
K
C'
L
N
fig.1
fig.2
G
C
C
I
I
O
O
B
A
T
Q
R
P
A
S

18687
16905
18430
17018

18491

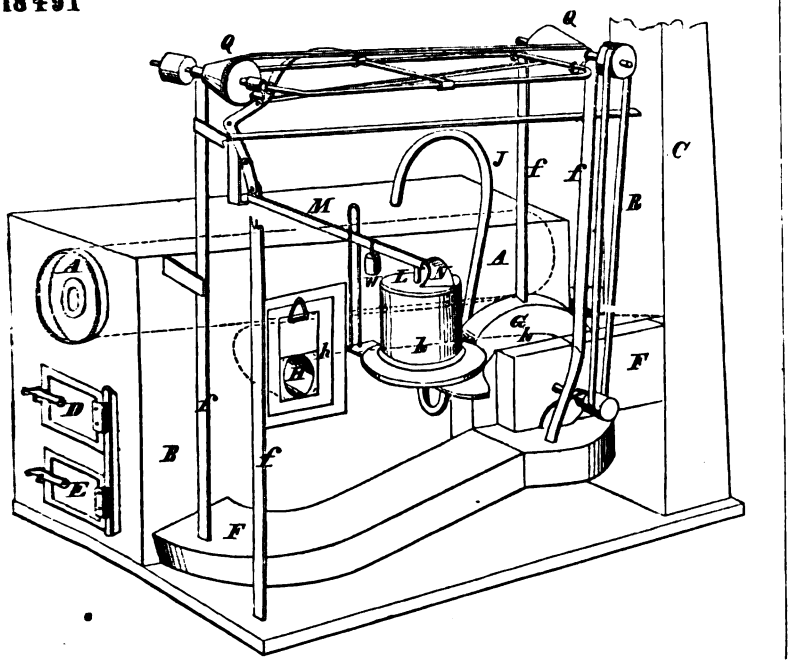

85

fig 1

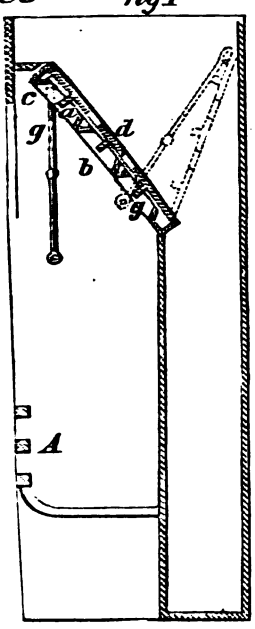

fig. 2

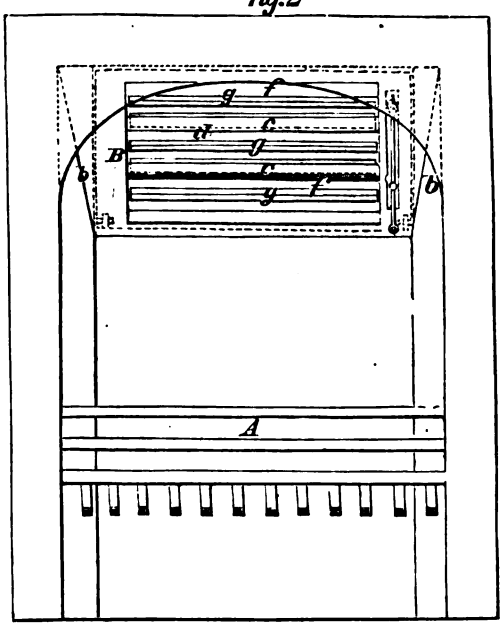

17039

fig.1

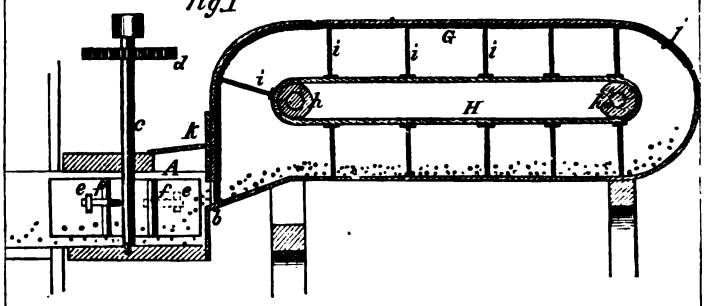

fig.2

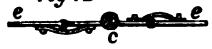

18432

fig.3

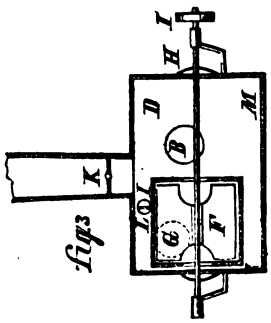

fig.4

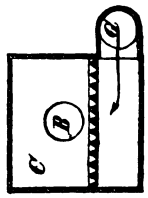

fig.1

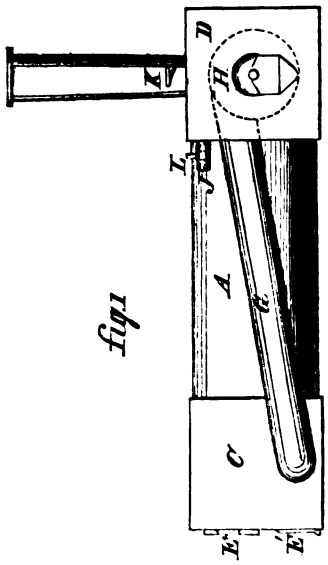

fig.2

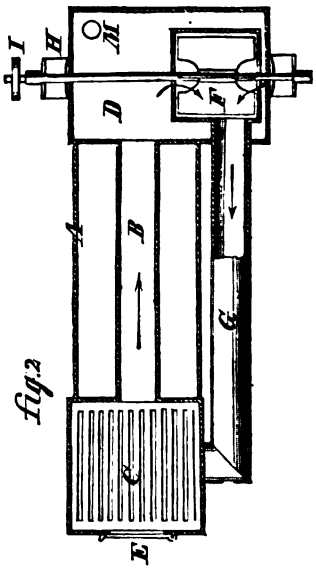

289

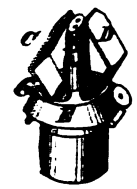

18125

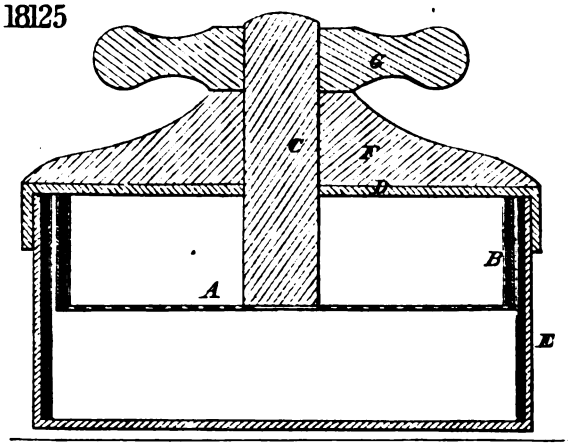

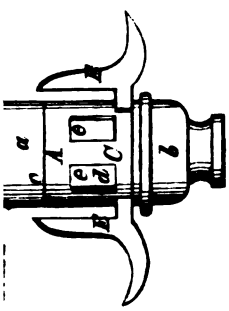

17035

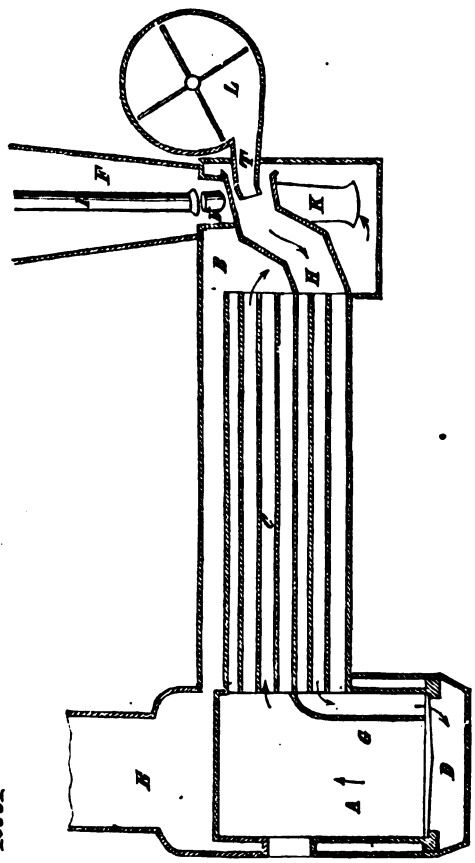

18951

16348

fig.1

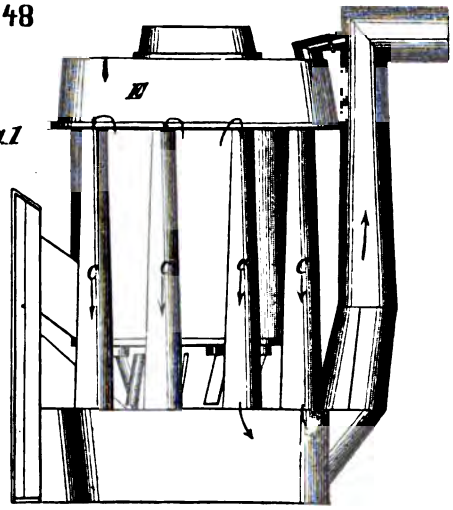

fig.2

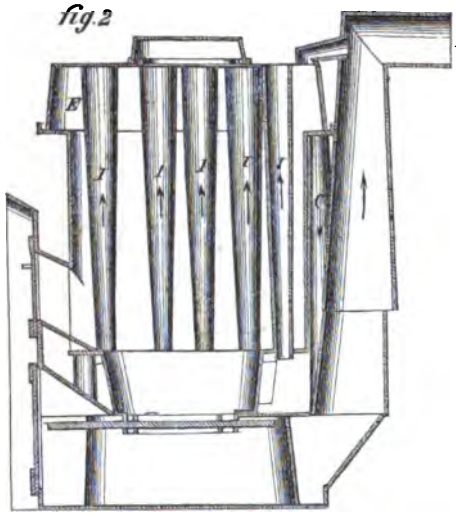

17530

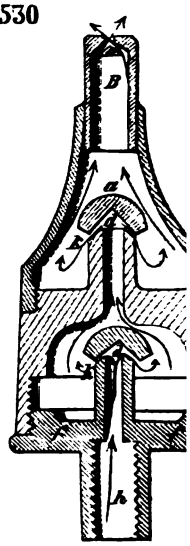

17674

fig.1

16768

fig.7

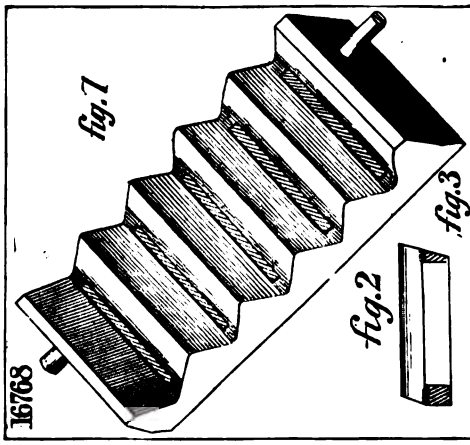

fig.2

fig.3

16848

fig.1

fig.2

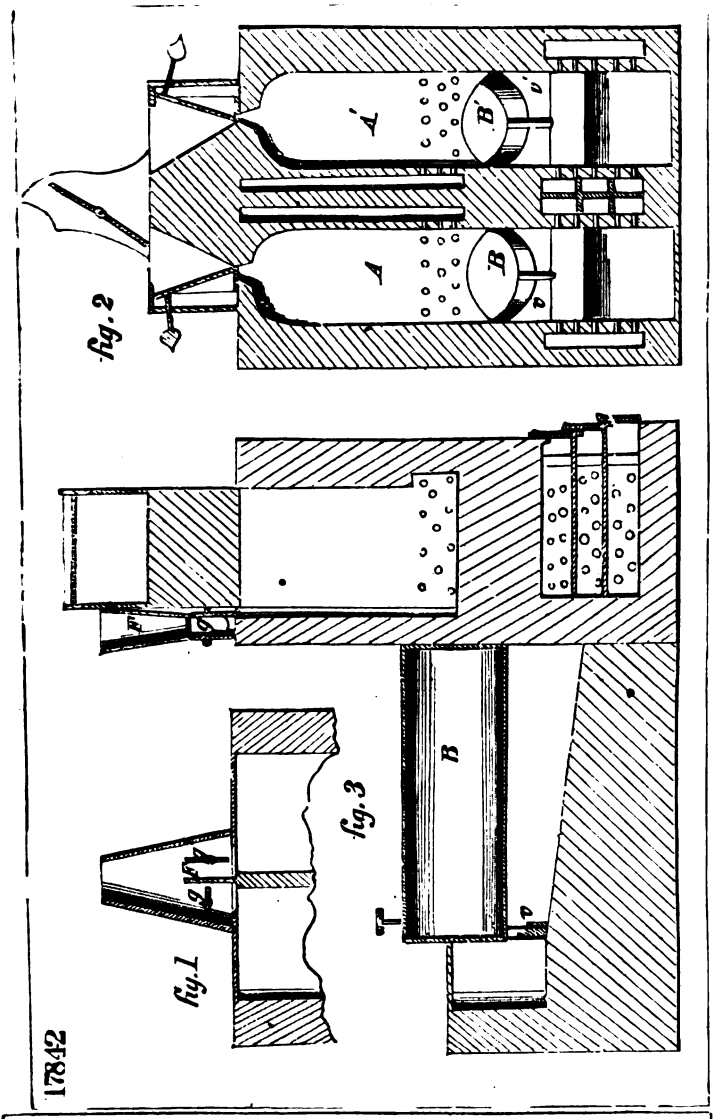
fig. 2
A'
B'
v'
A
B
v
fig. 3
B
fig. 1
A
17842

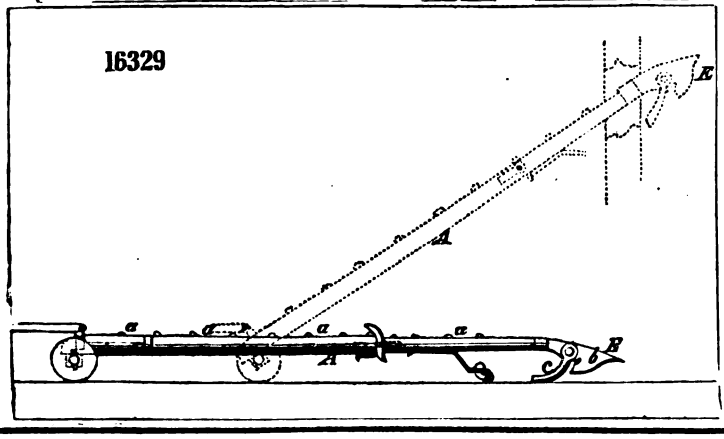
16329
E
A
a
a
a
a
A
E

18874.

fig. 1

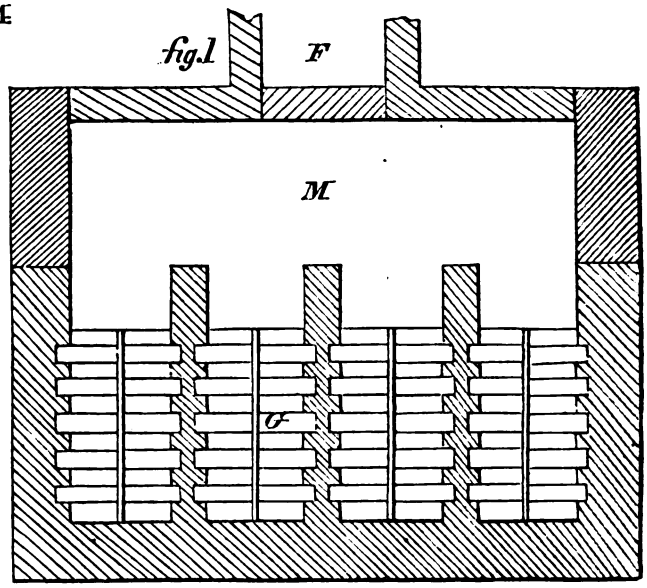

fig 2

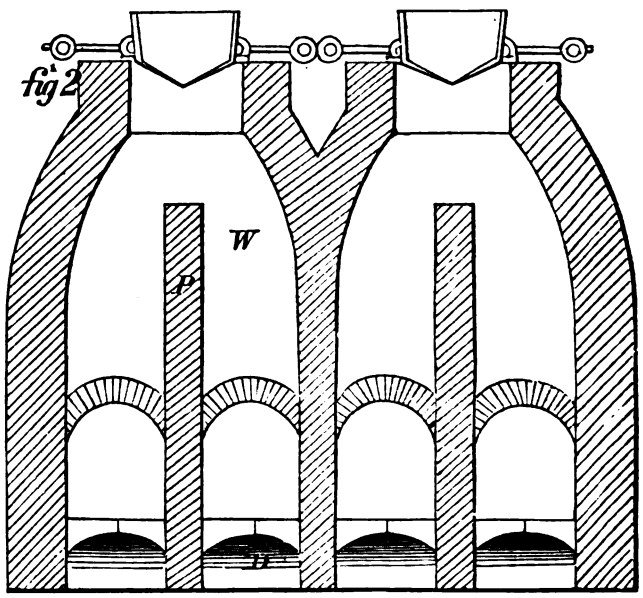

16598

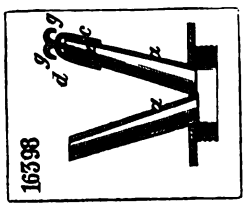

18874

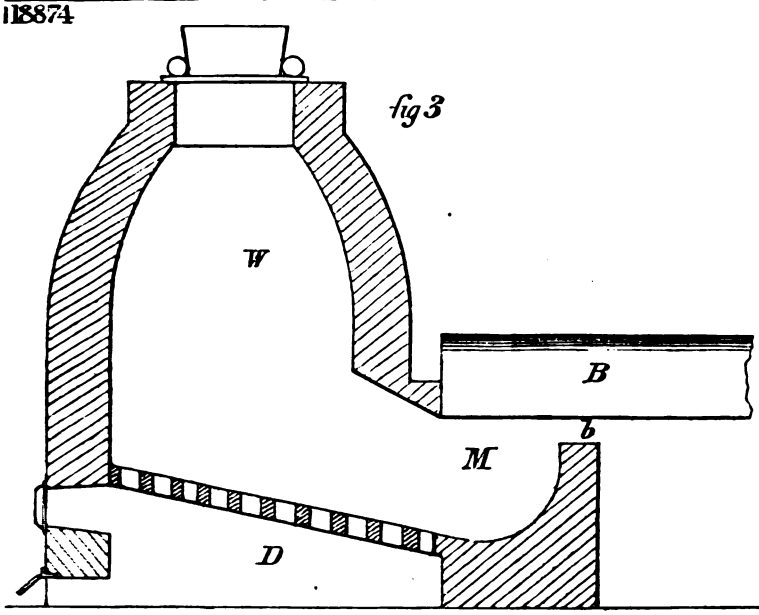

fig 3

16852

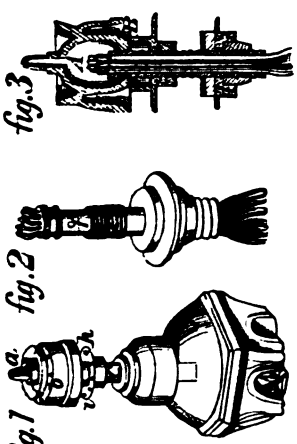

fig.3

fig.2

fig.1

17658

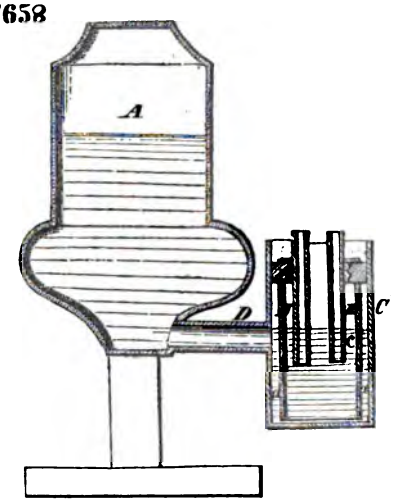

16825

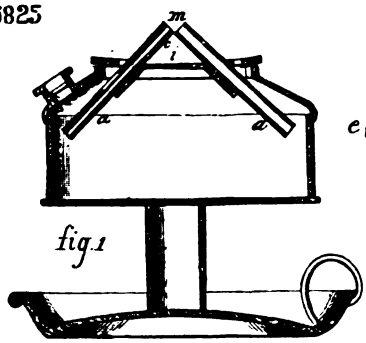

fig.1

fig.2

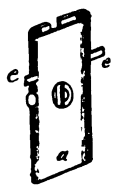

17022

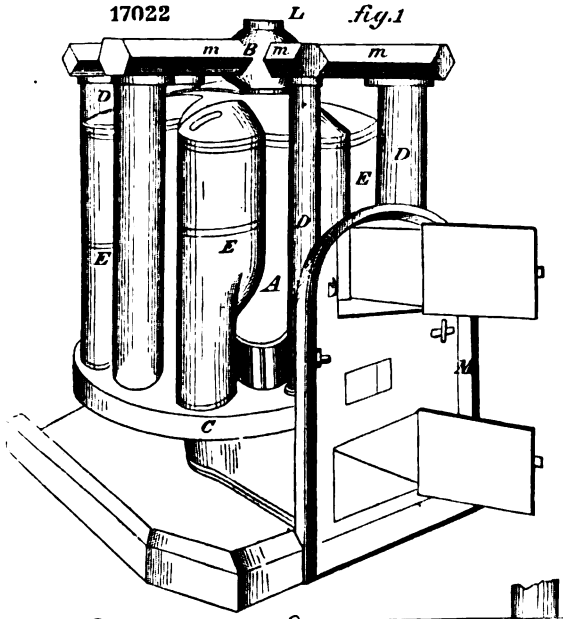

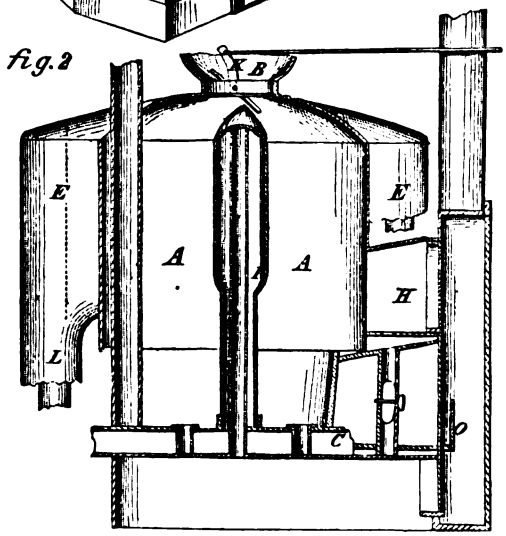

18307

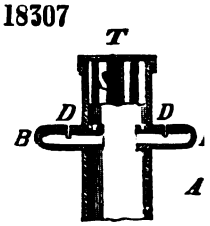

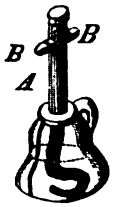

17540

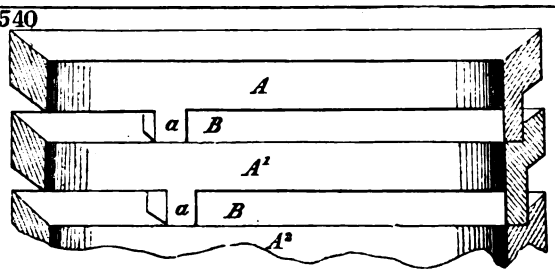

3002

Fig. 1

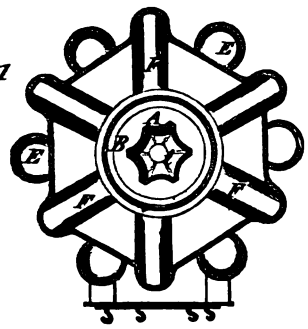

Fig. 2

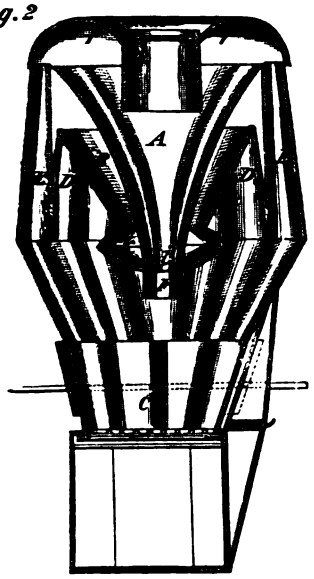

17791

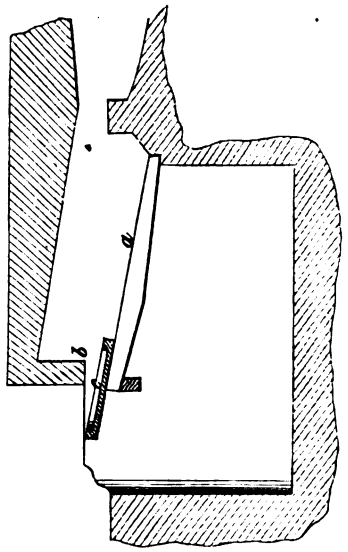

18230

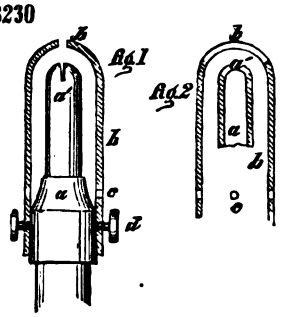

17251

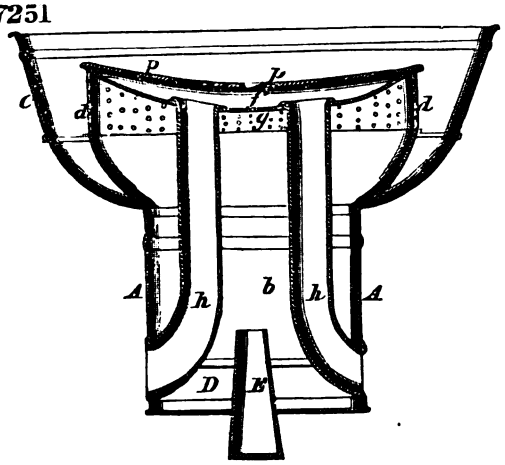

17086

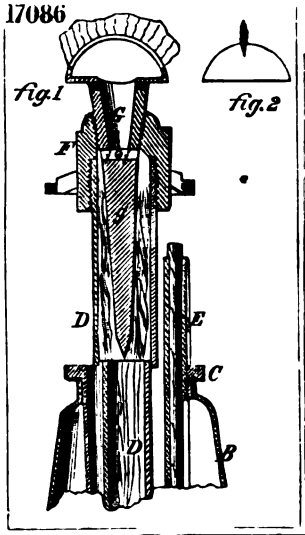

17989

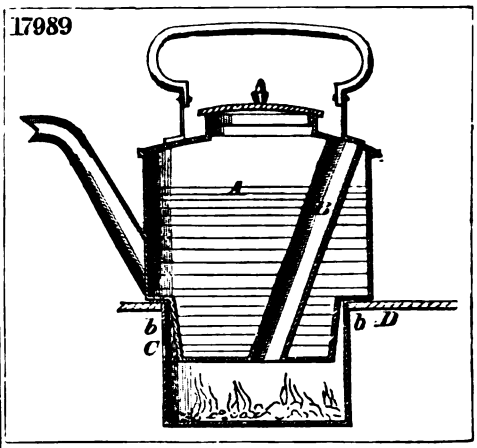

18010

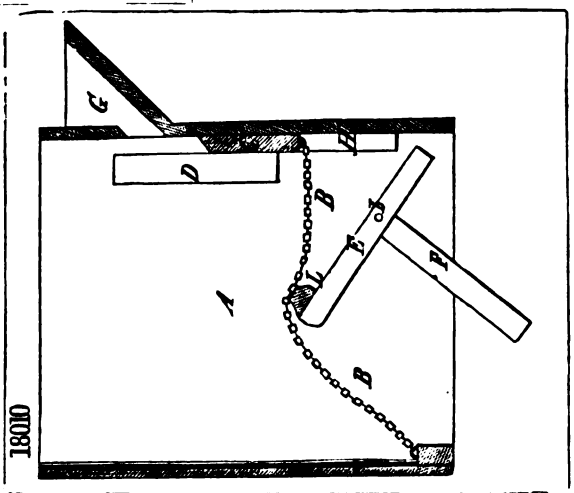

18054

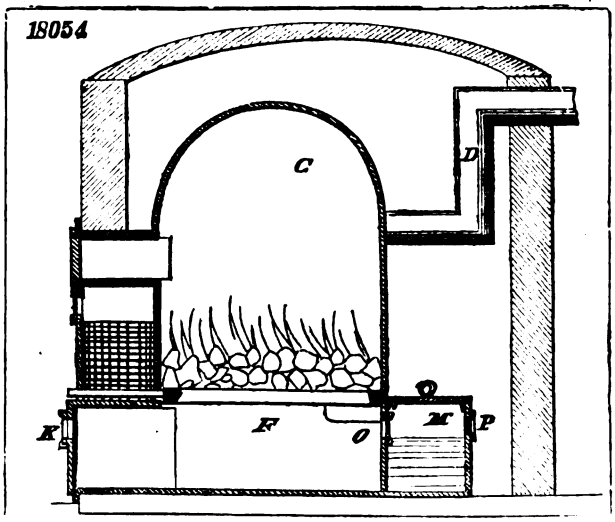

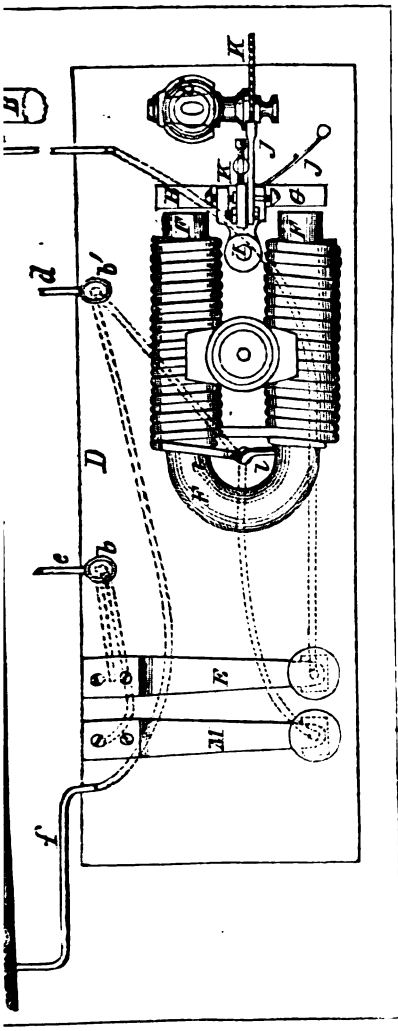

17076

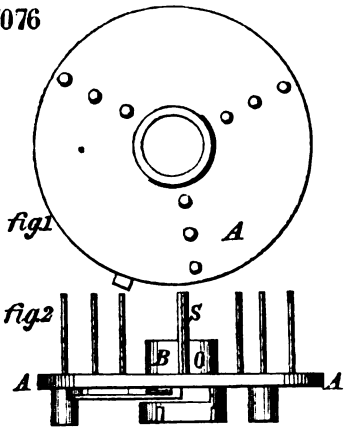

16981

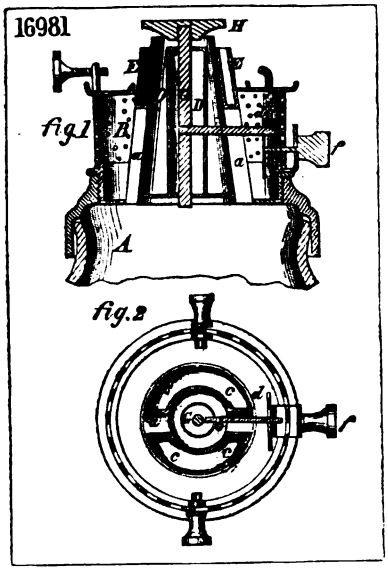

18356

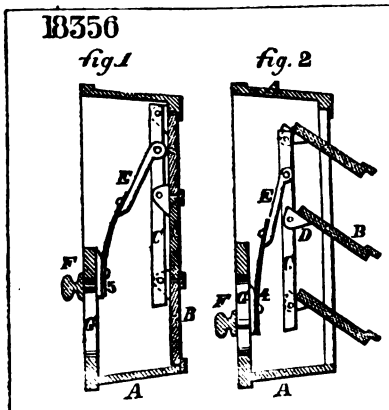

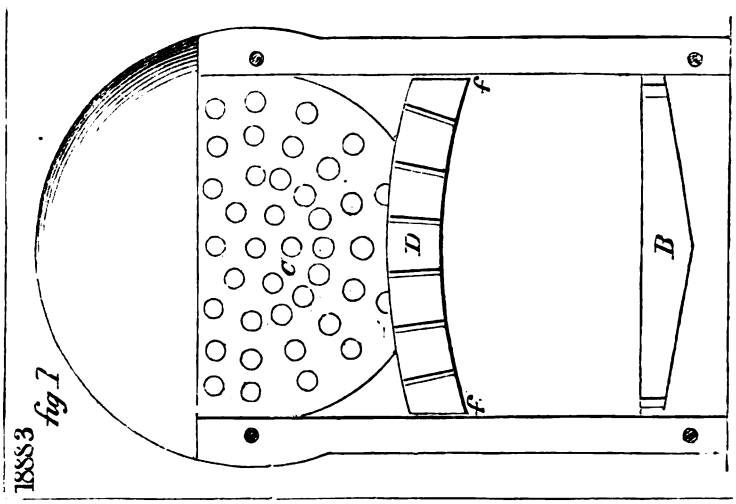
18883
fig 1
C
D
f
f
B

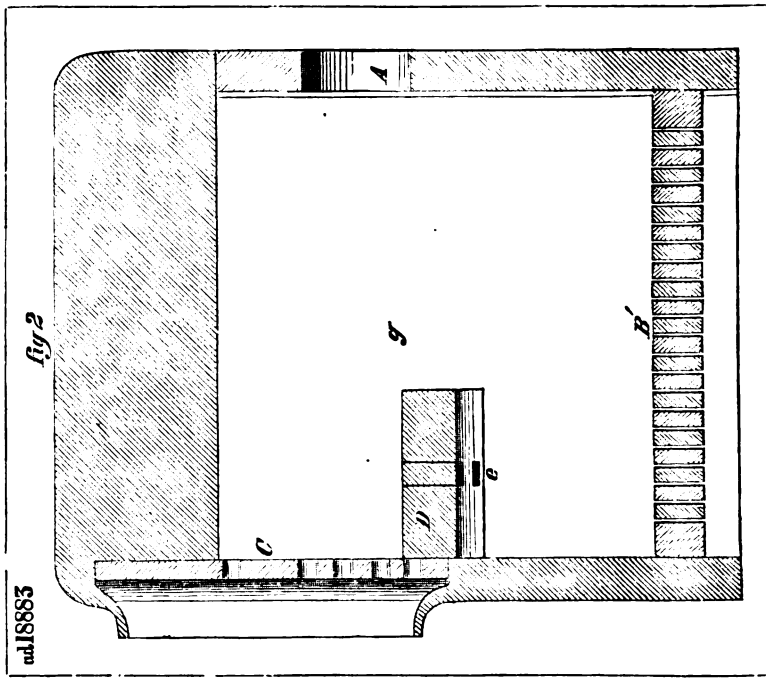
ad 18883
fig 2
A
C
g
D
e
B'

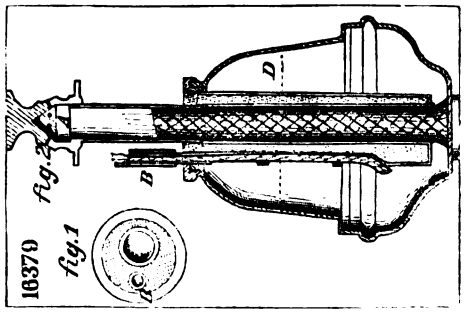
16370
fig 1
fig 2
D
b

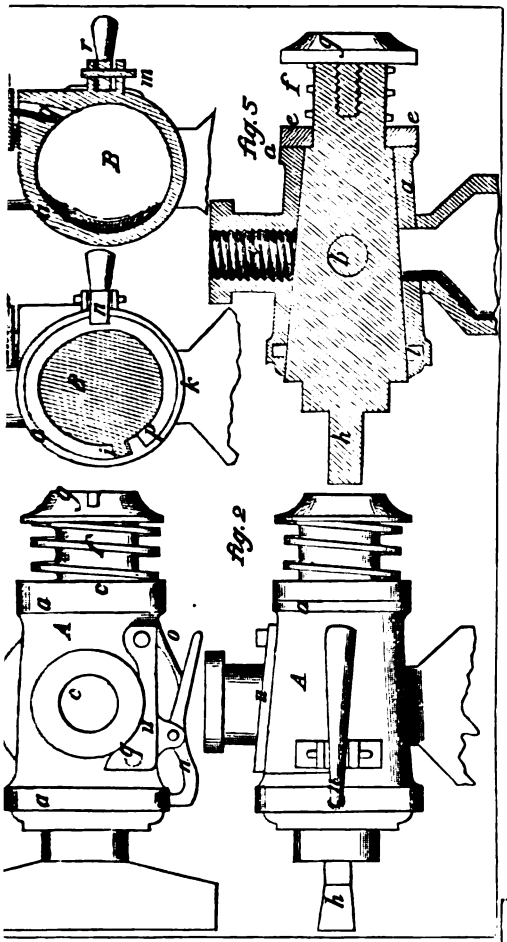
Fig. 5
Fig. 2

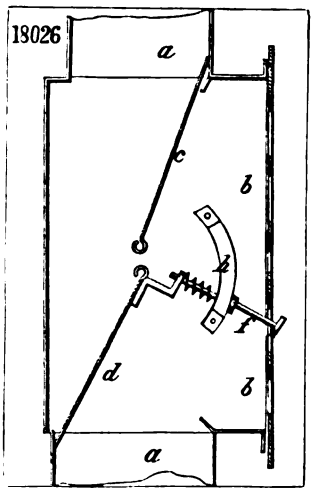
18026

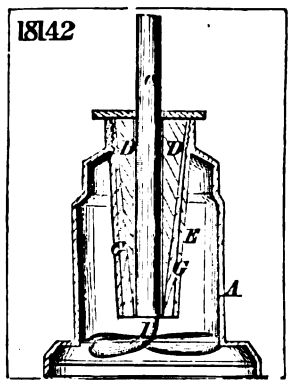
18142

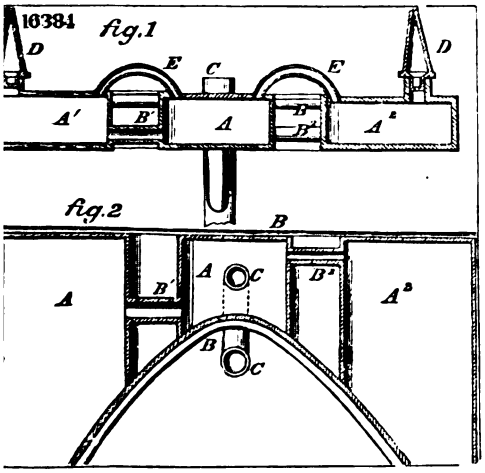
16384
fig. 1
fig. 2

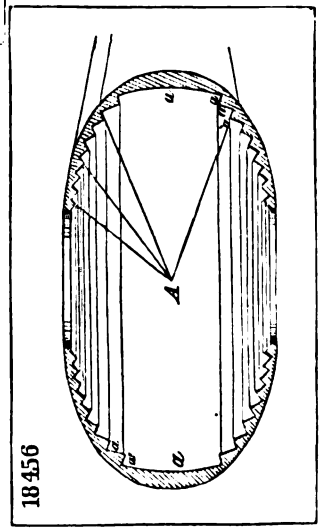
18456

18704

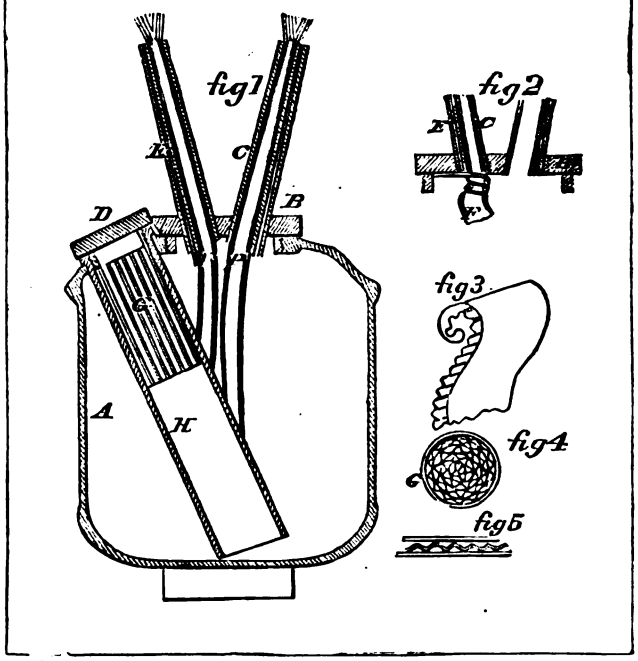

17507

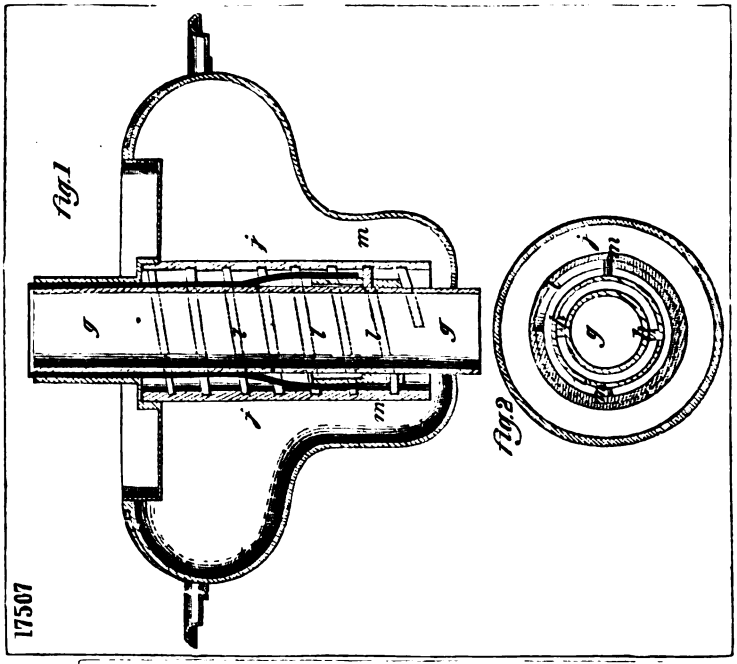

17637

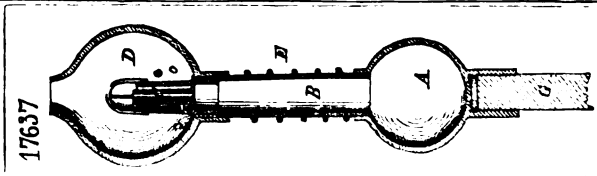

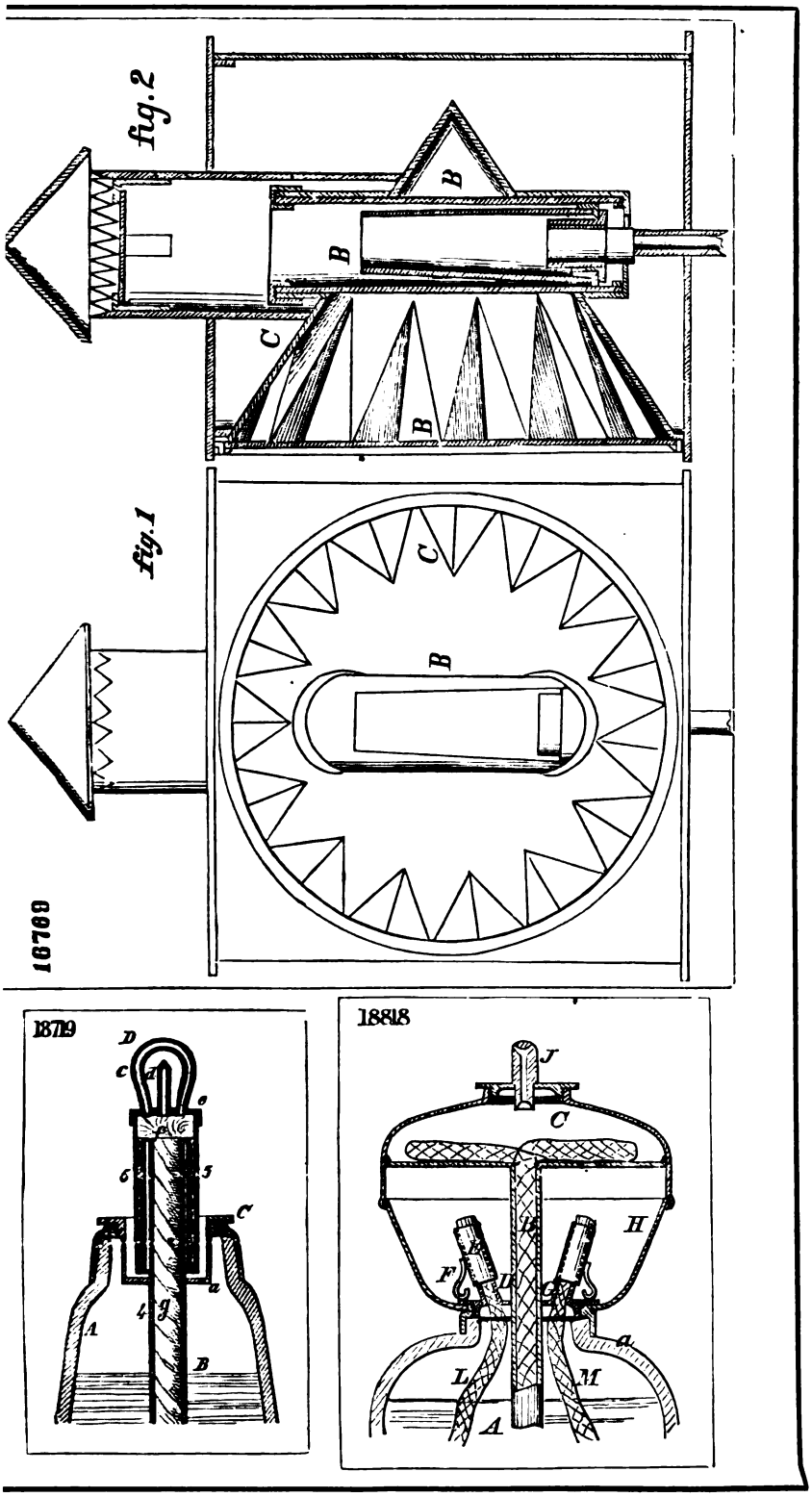
fig. 2
B
B
C
B
fig. 1
C
B
16769
18719
D
c
d
e
6
5
C
a
4
g
A
B
18818
J
C
H
F
D
G
a
L
M
A

18602

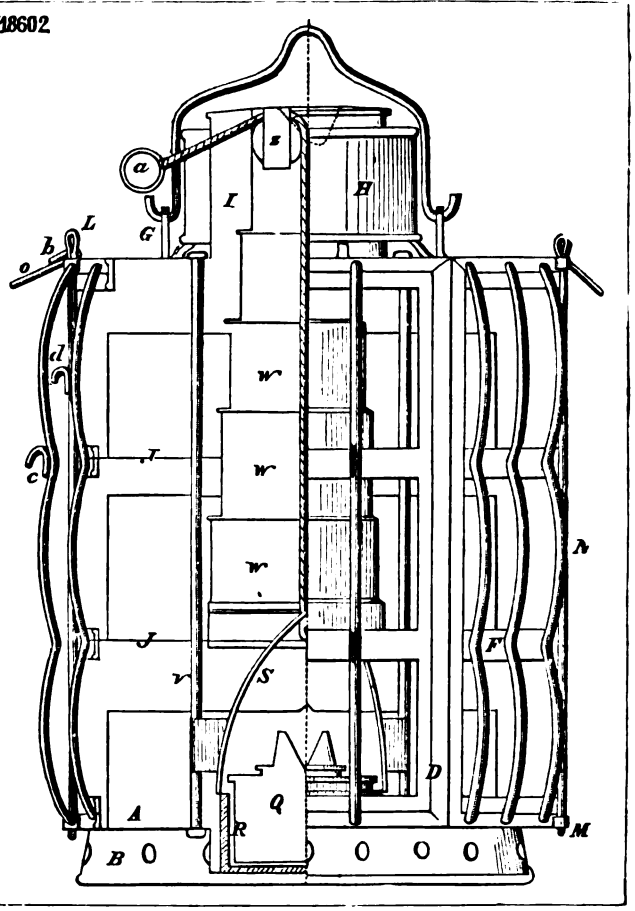

18784

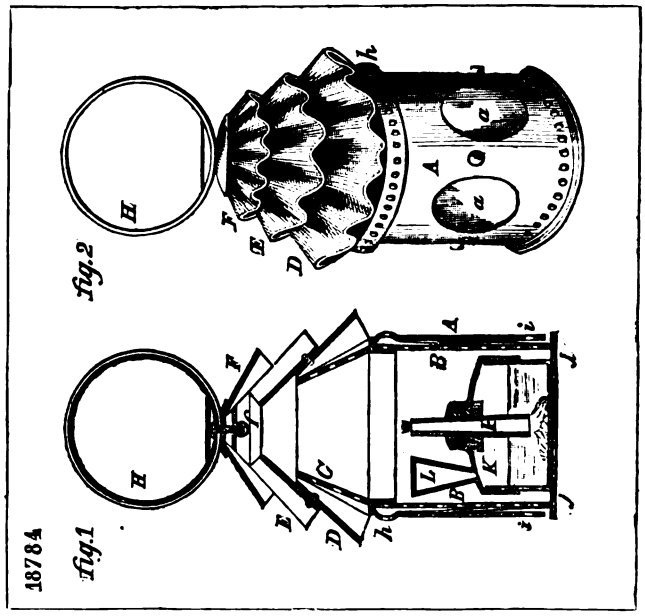

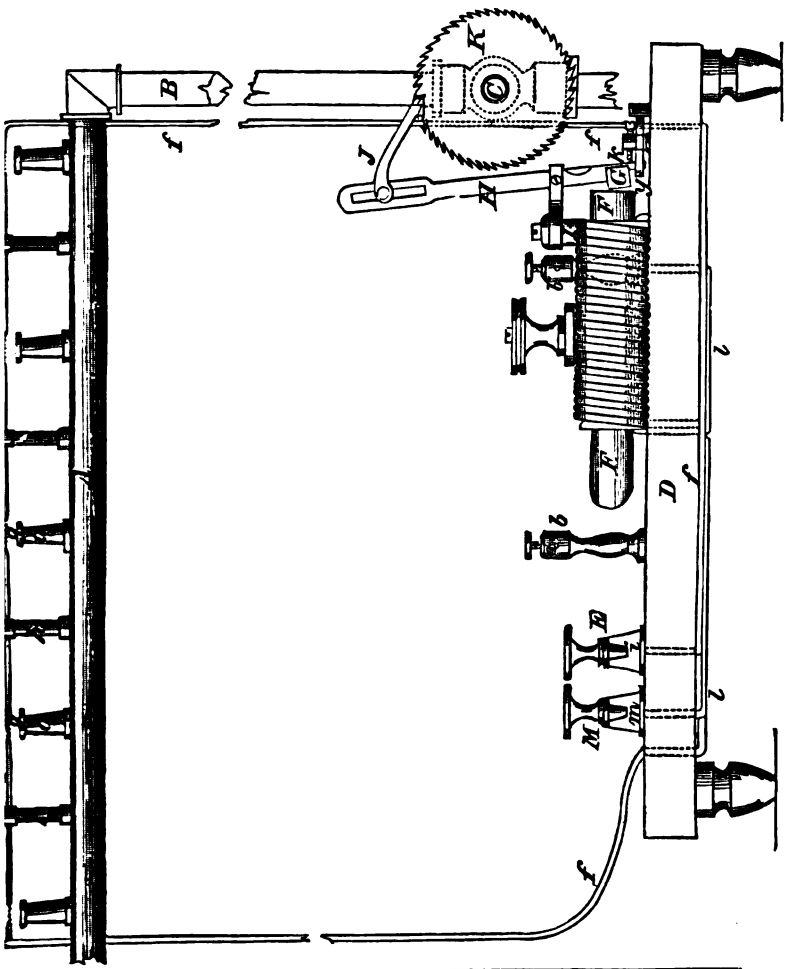

17351.

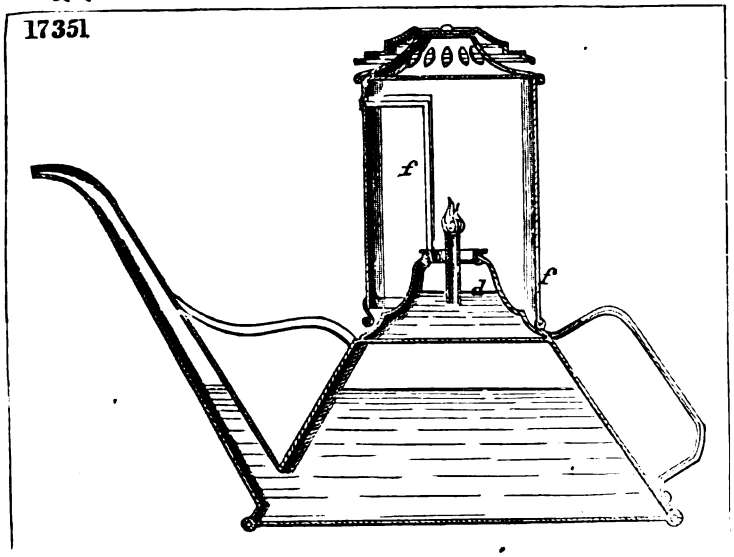

18105

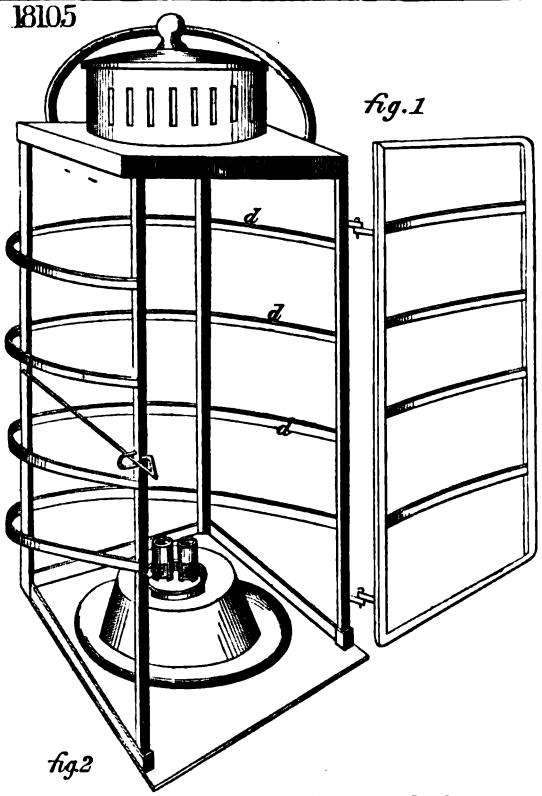

fig.1

fig.2

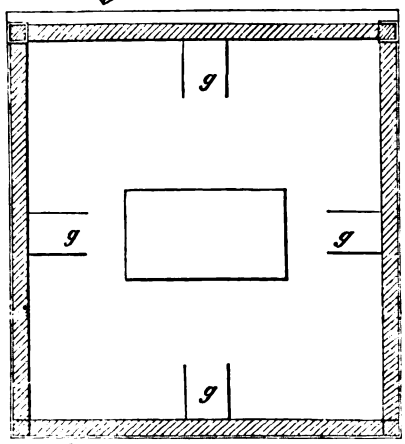

fig.3

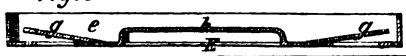

17696

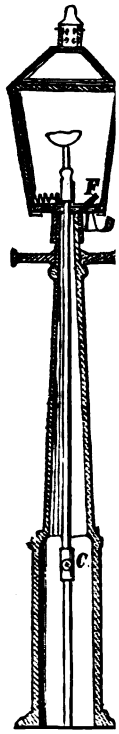

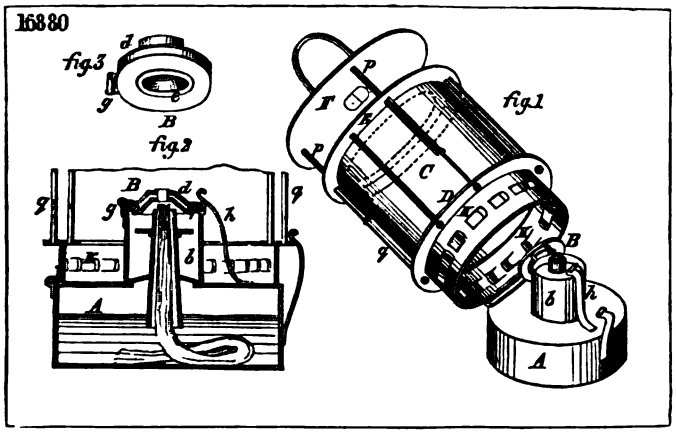
16880
fig 3
fig 2
fig 1

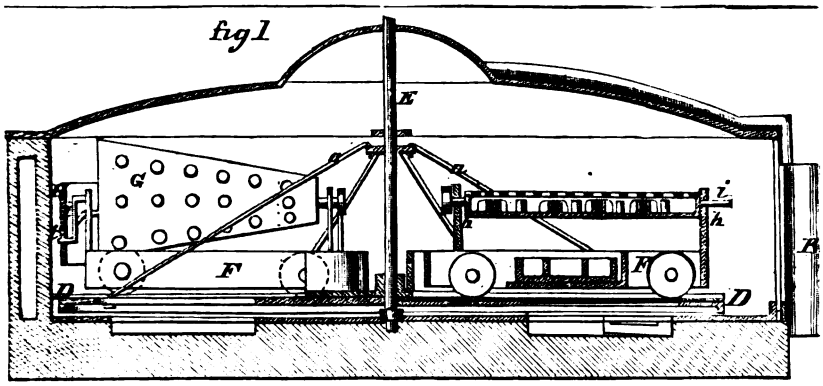
fig 1

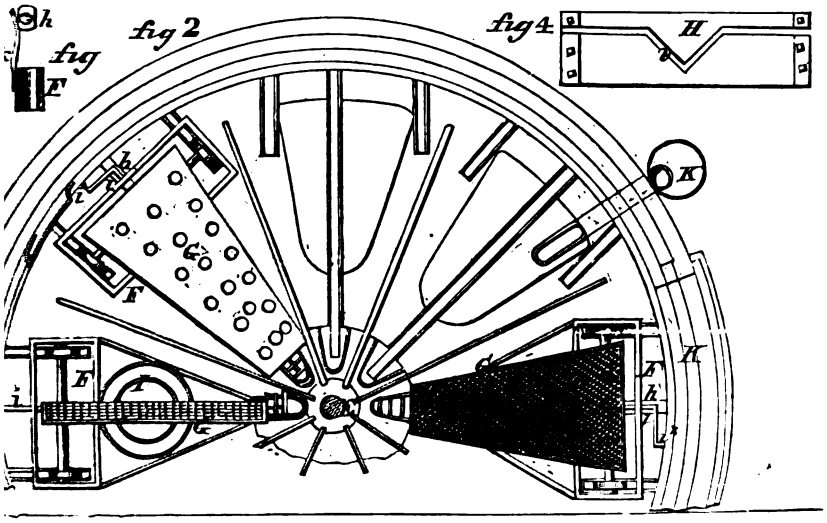
fig 2
fig 4

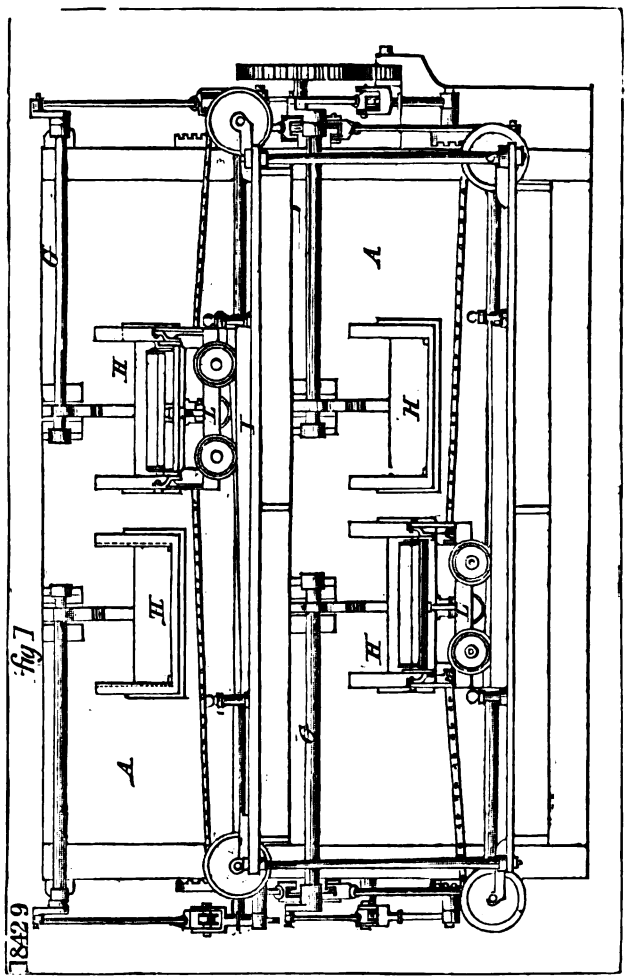

fig 1

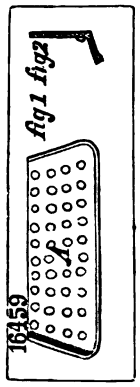

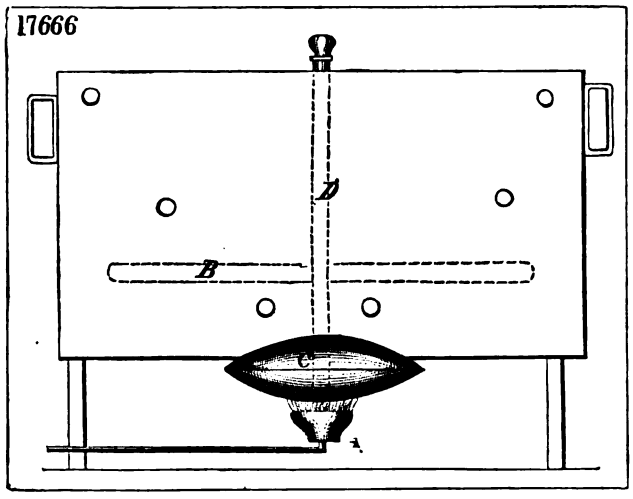

fig.3

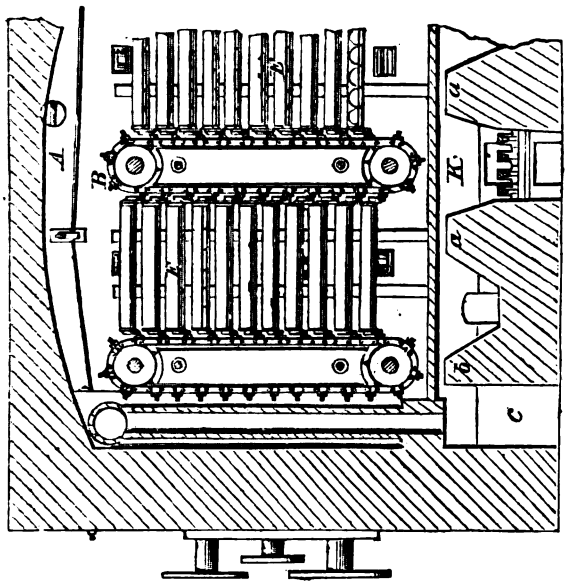

fig.2

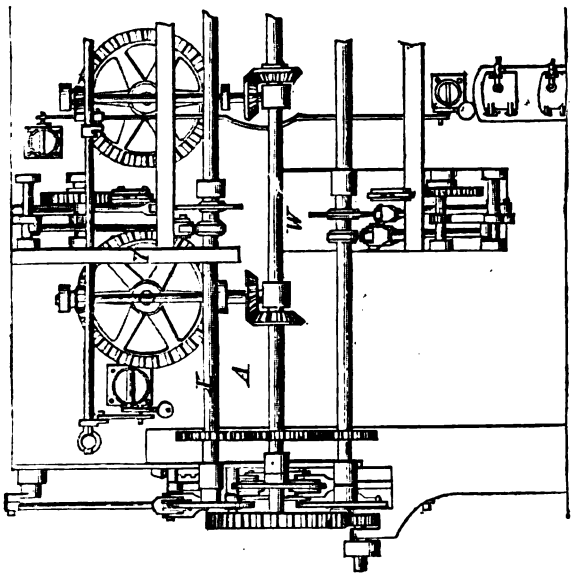

ad184129

16423

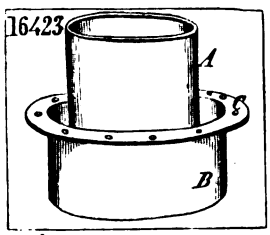

18055

fig.1

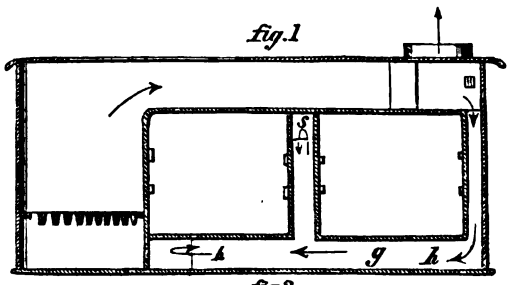

fig.2

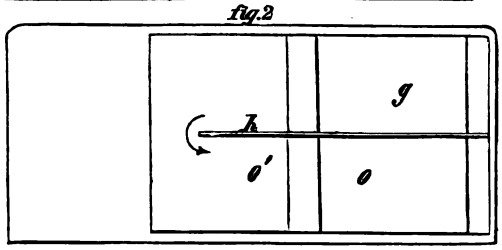

17259

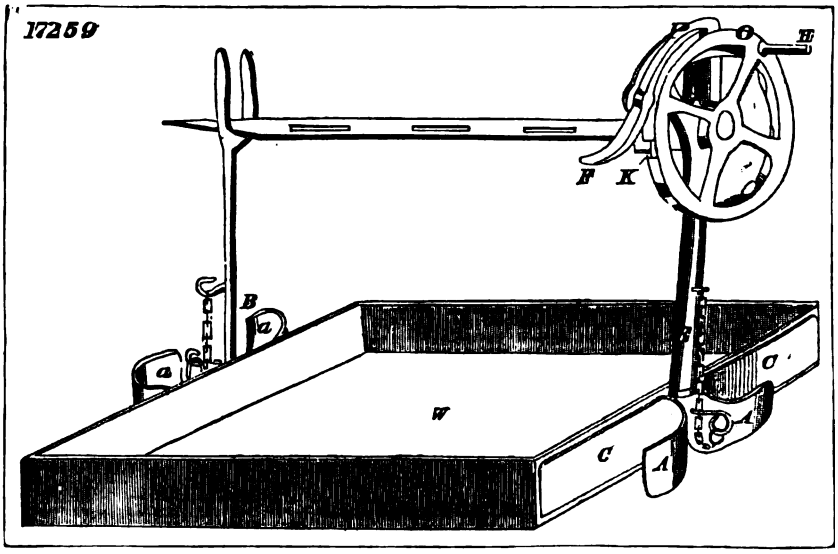

17456

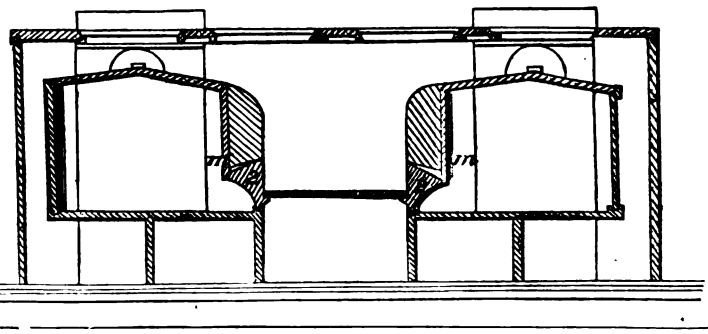

16524

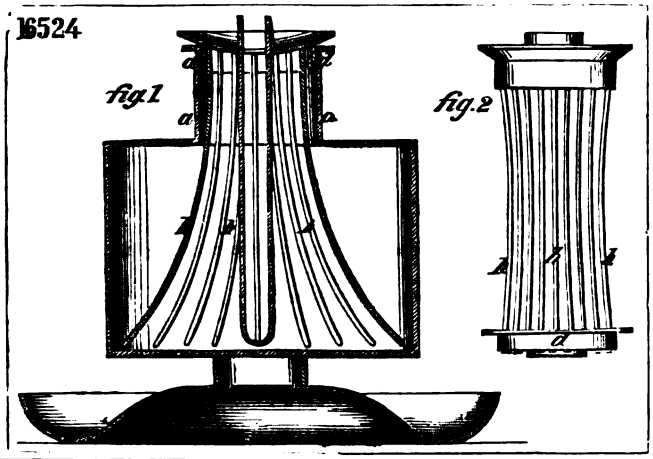

41

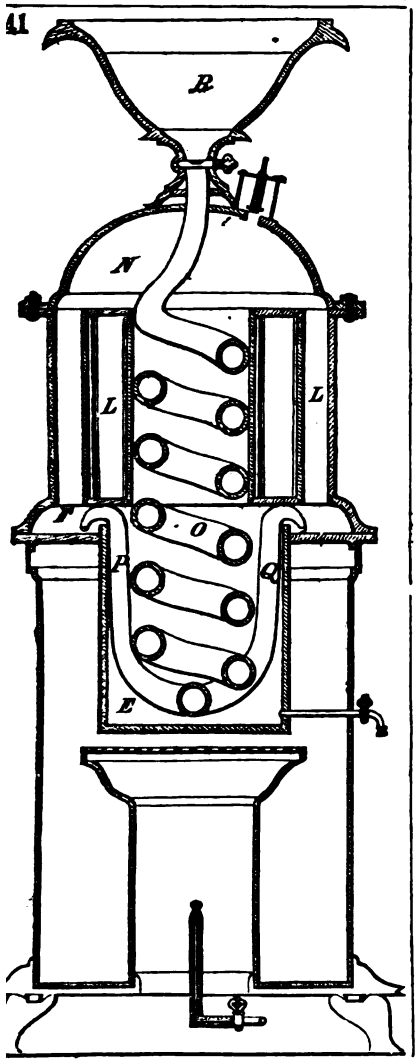

16549

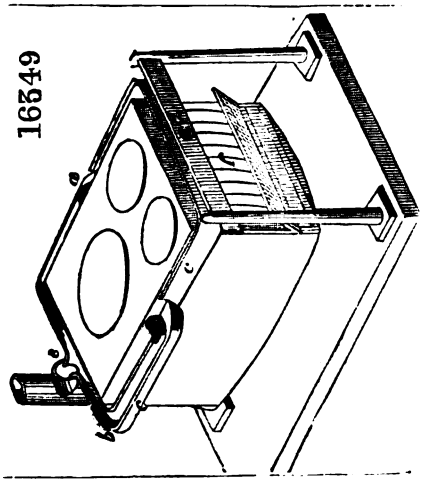

18241

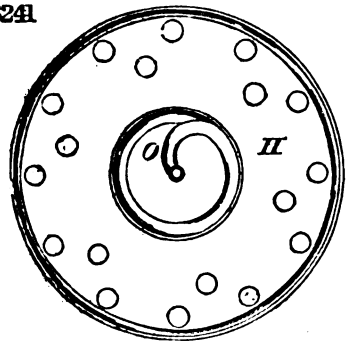

17750

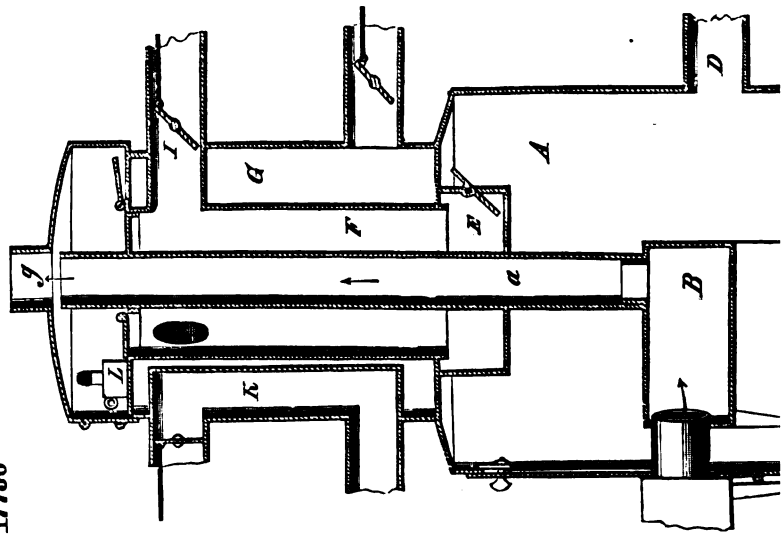

17767

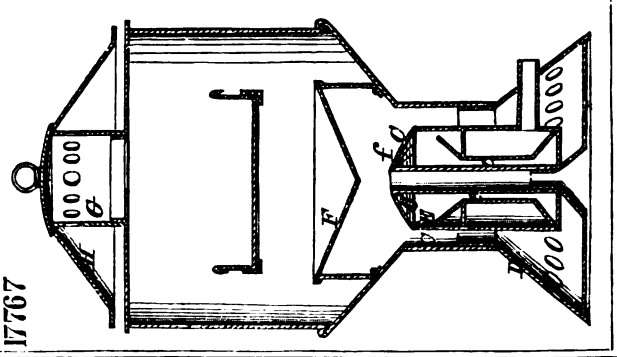

16538

fig 1

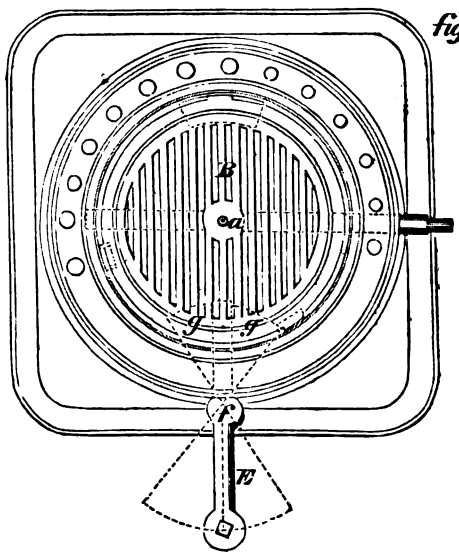

fig 2

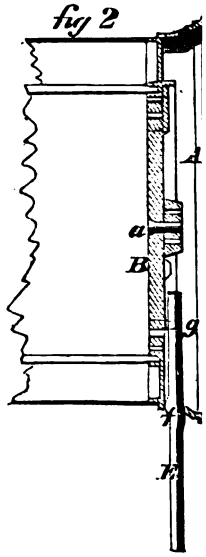

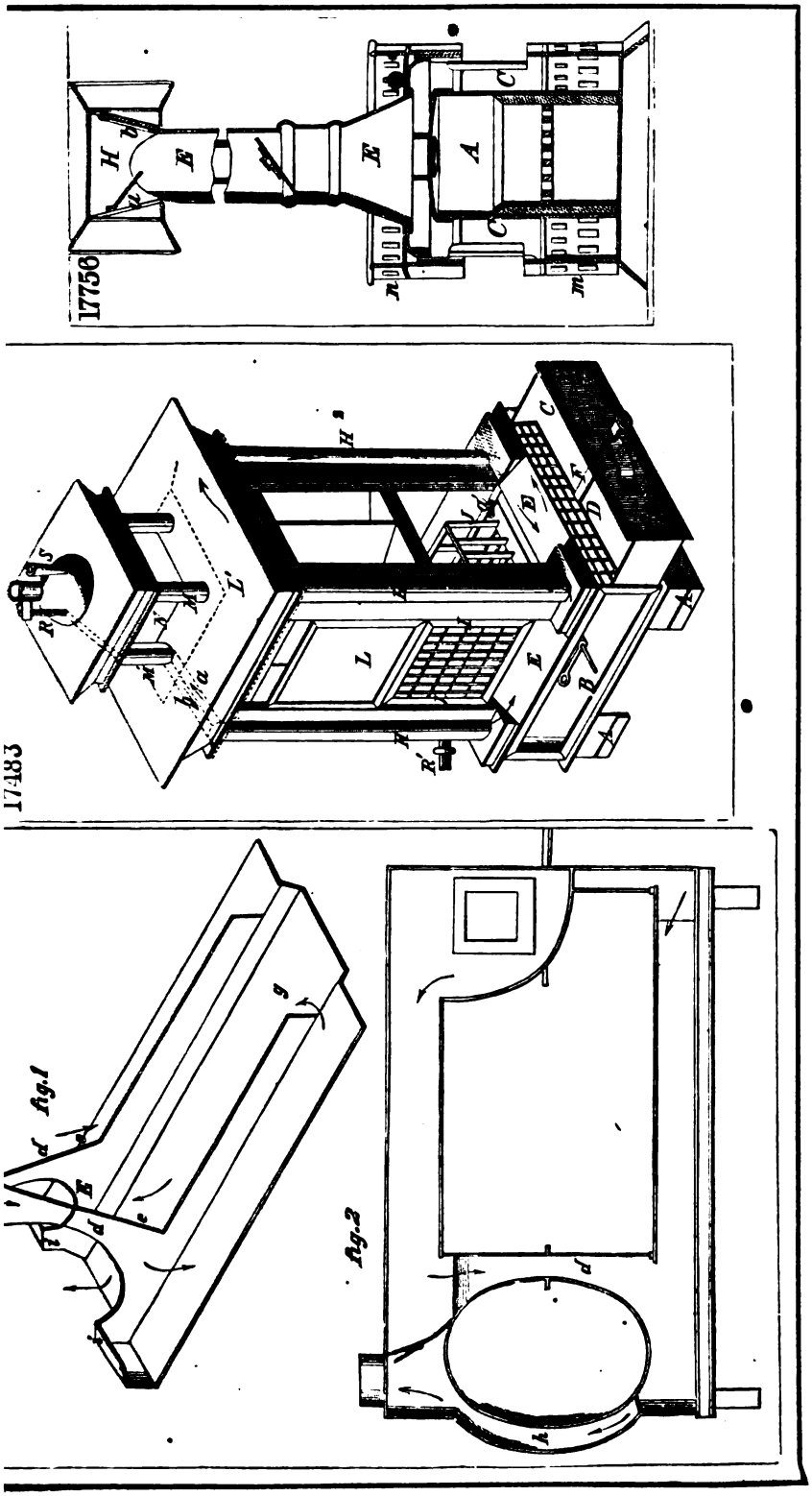
17750
17483
Fig.1
Fig.2

18434

fig.1

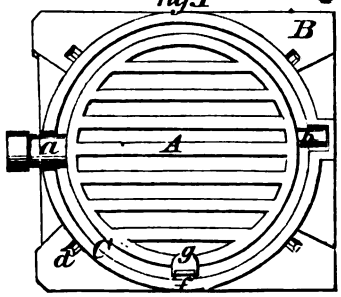

fig.4

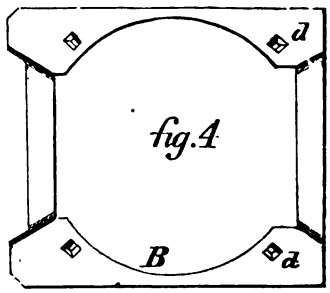

fig.2

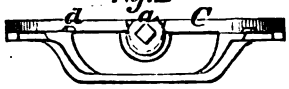

fig.3

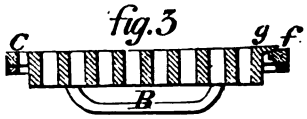

fig.5

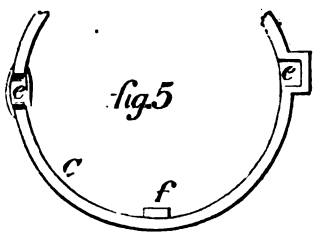

18859

fig 1

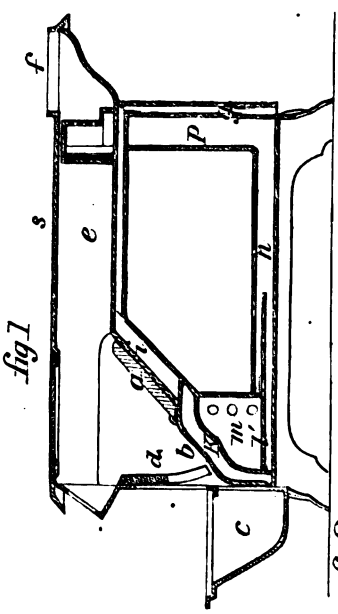

fig 2

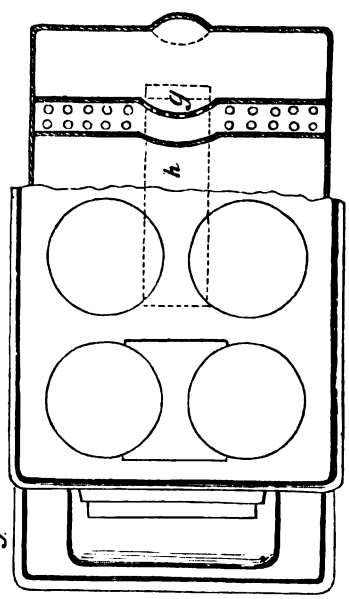

17235

fig. 1

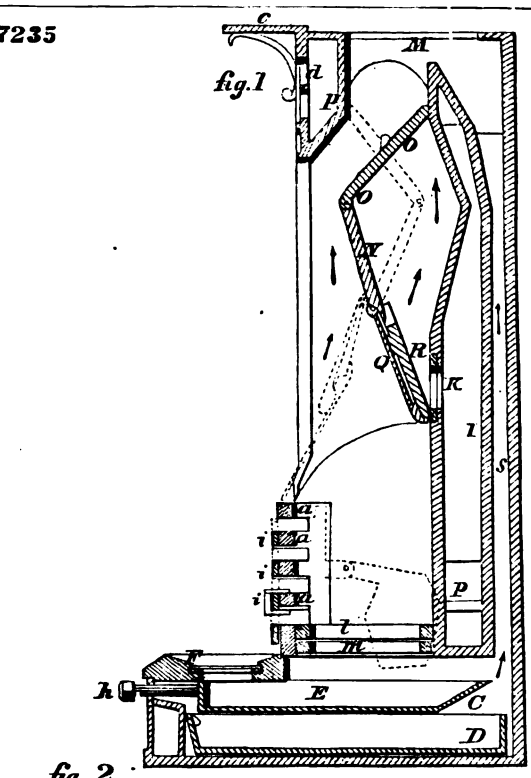

fig. 2

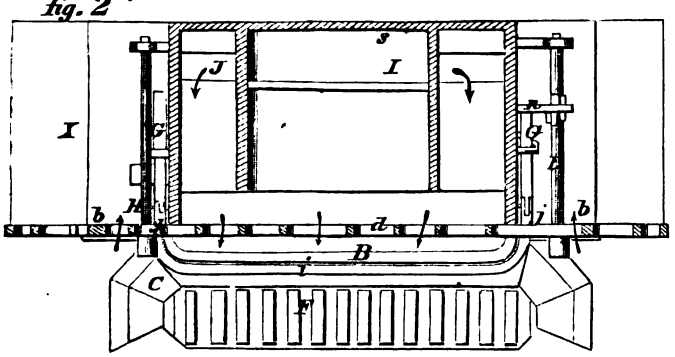

17283

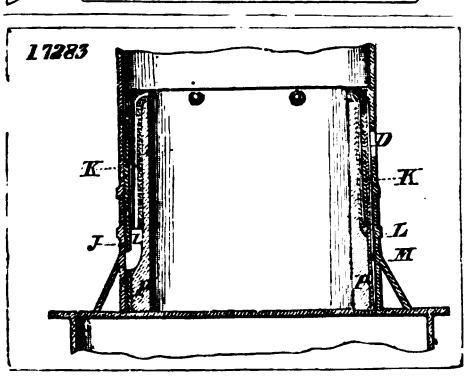

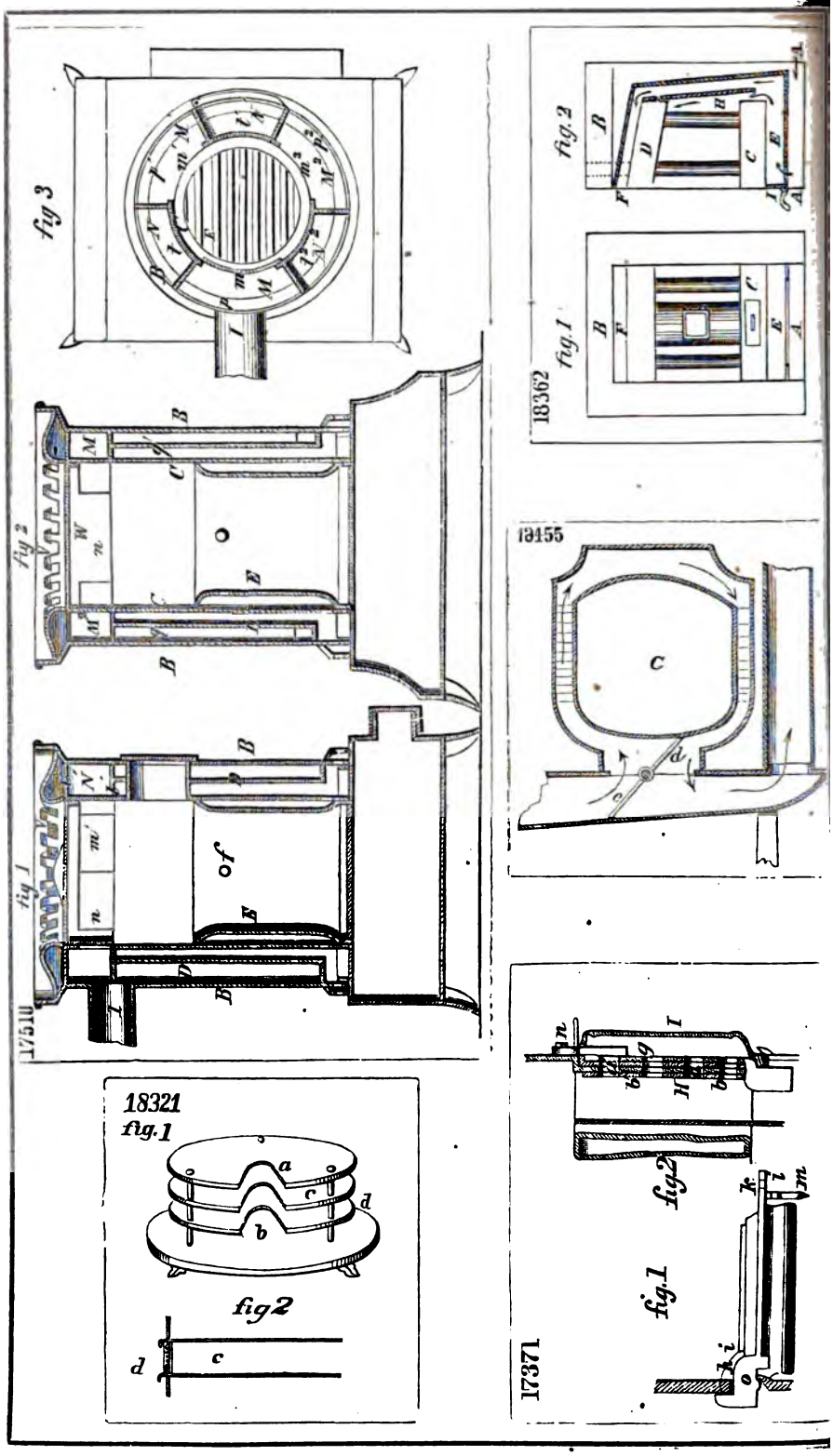
fig 3
fig 2
fig 1
17510
18362
fig. 2
fig. 1
13455
17371
18321
fig. 1
fig 2
fig. 1
fig 2

469

fig. 1

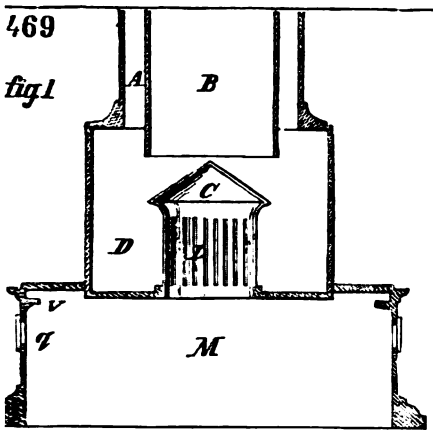

fig. 2

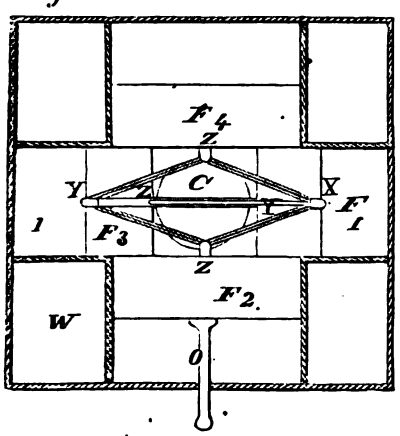

fig. 3

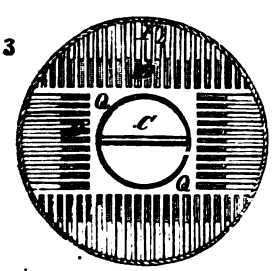

18012

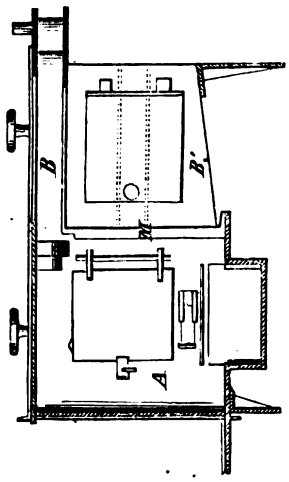

17771

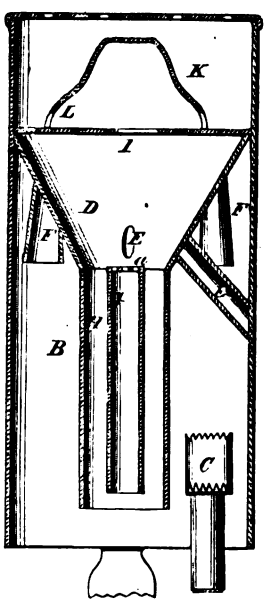

17919

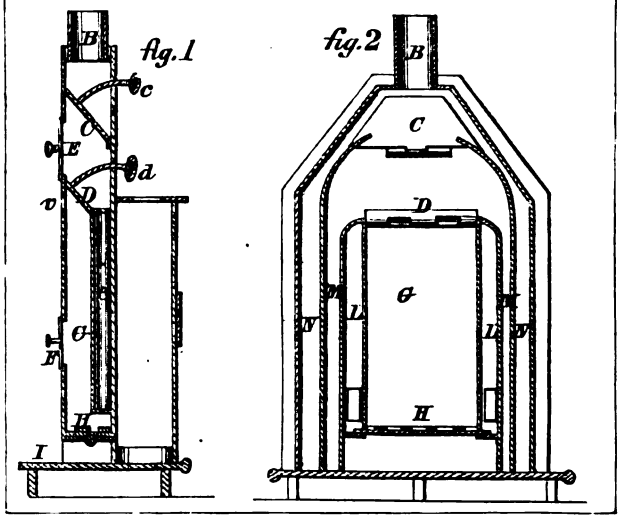

18024

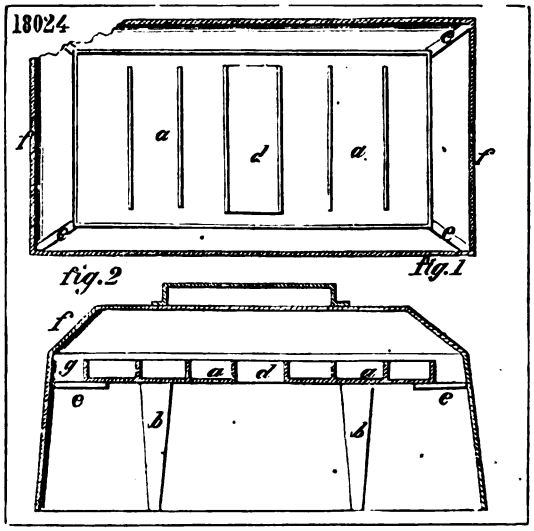

18586

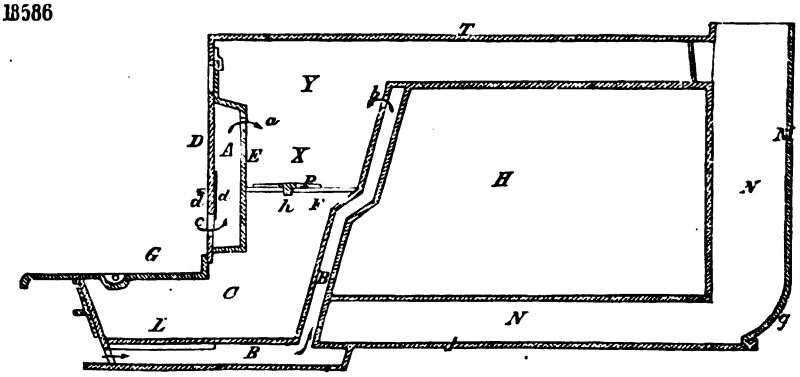

18737

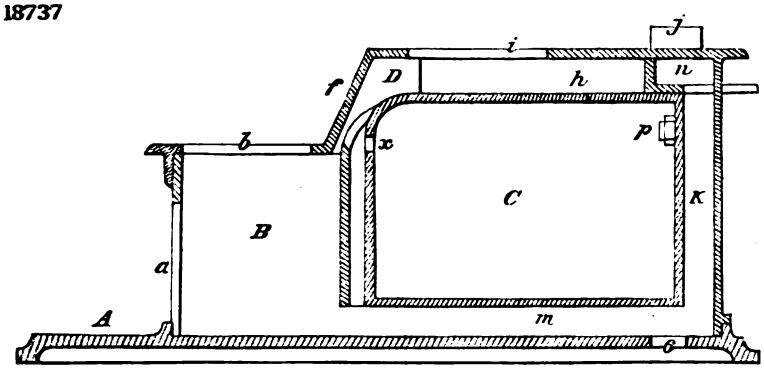

18680

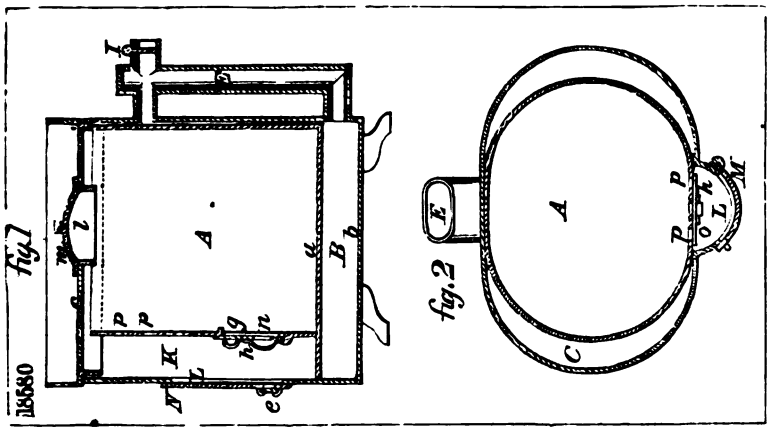

17100

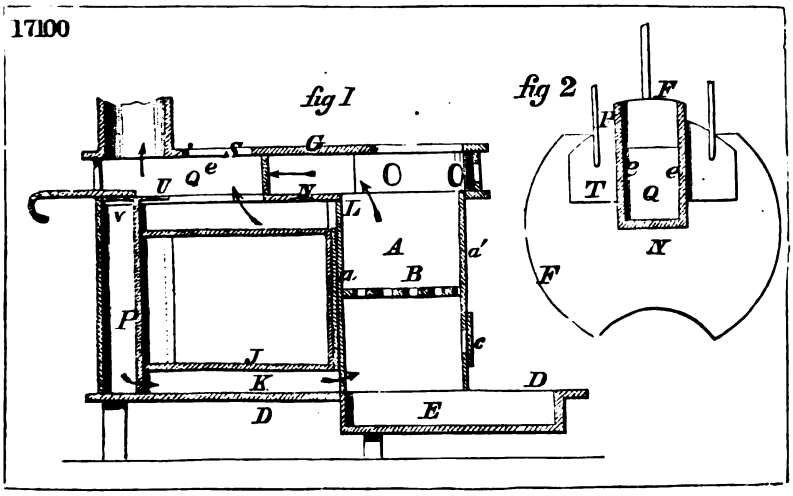

16939

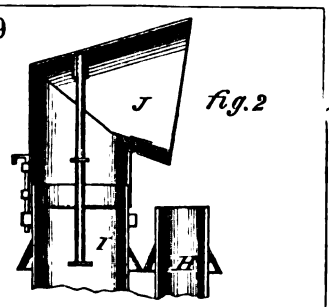

fig. 2

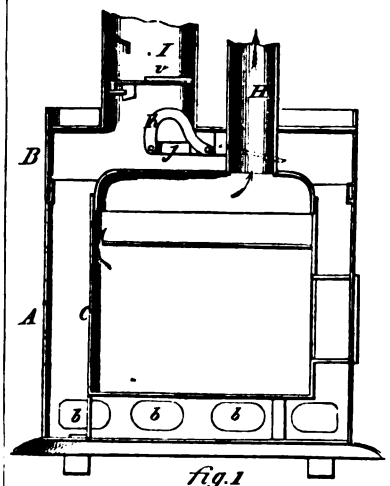

fig. 1

18297

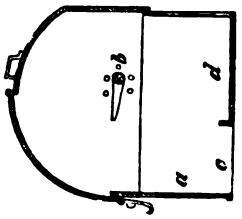

fig. 3

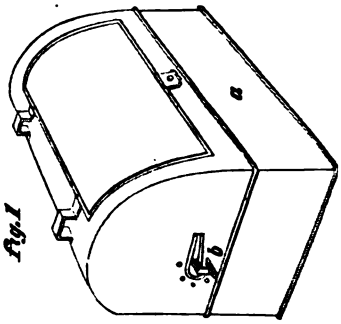

fig. 1

16607

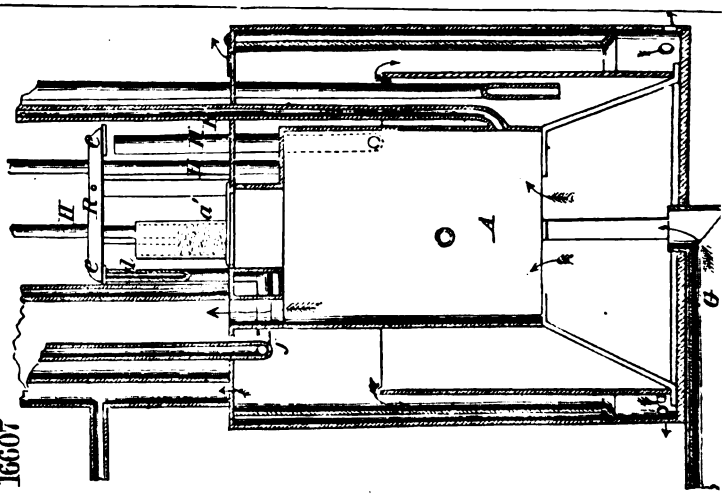

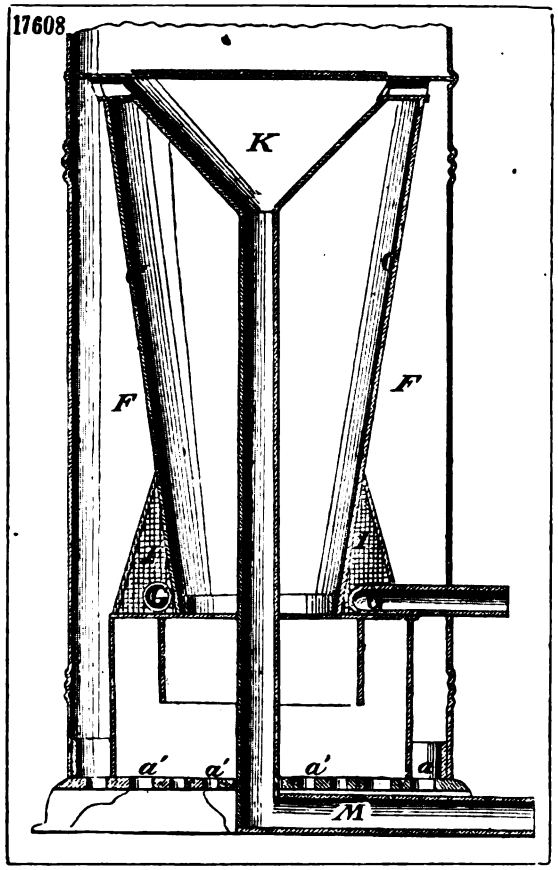
17608
K
F
F
G
G
a'
a'
a'
a
M

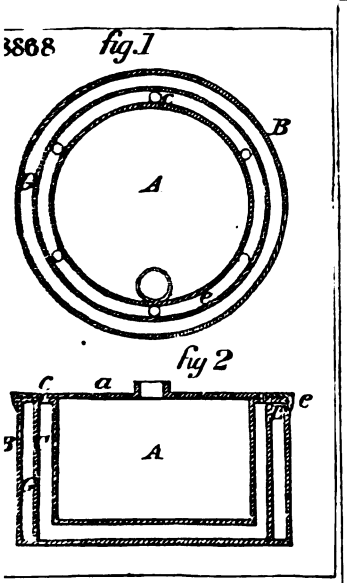
3868
fig.1
B
A
fig 2
c
a
e
A

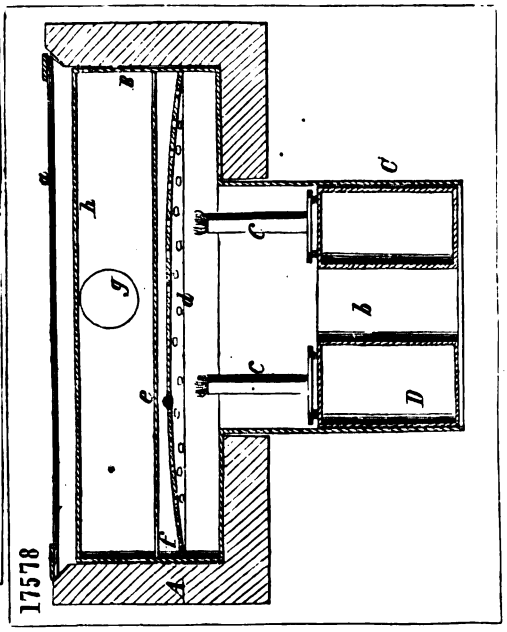
17578
a
h
g
d
e
f
A
C
c
b
c
D

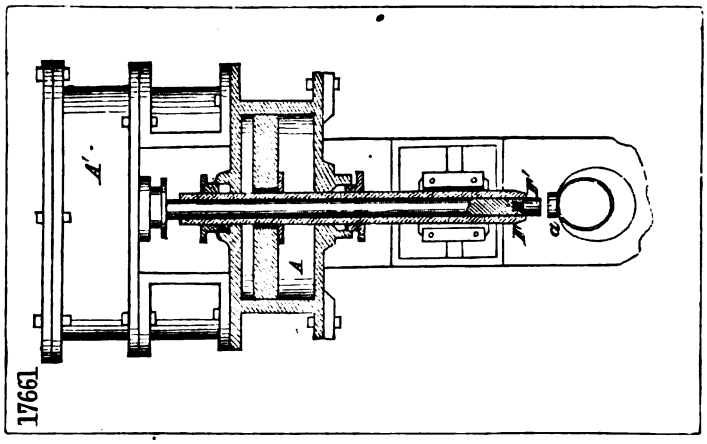
17661

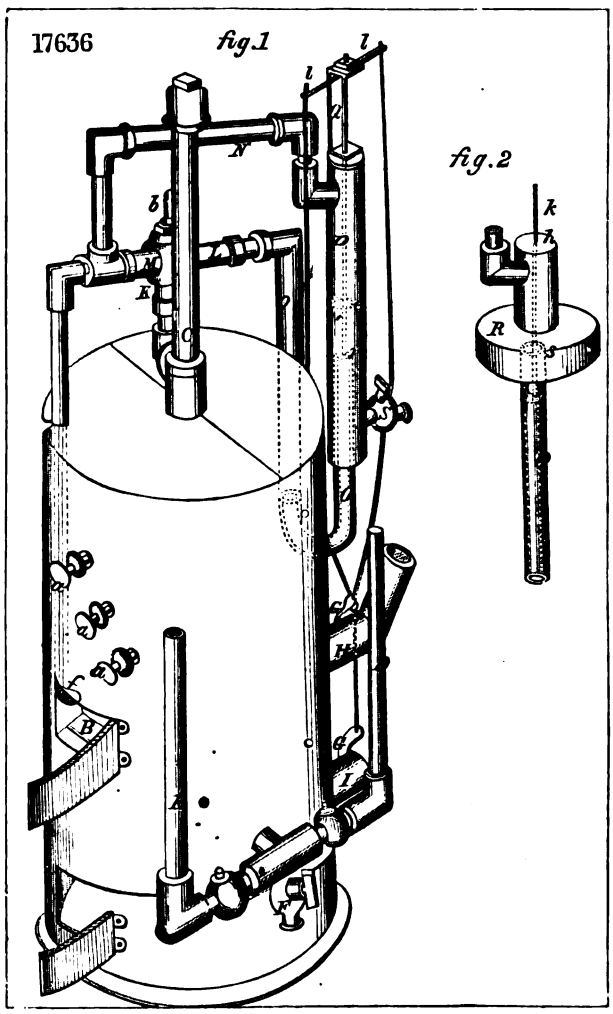
17636
fig.1
fig.2

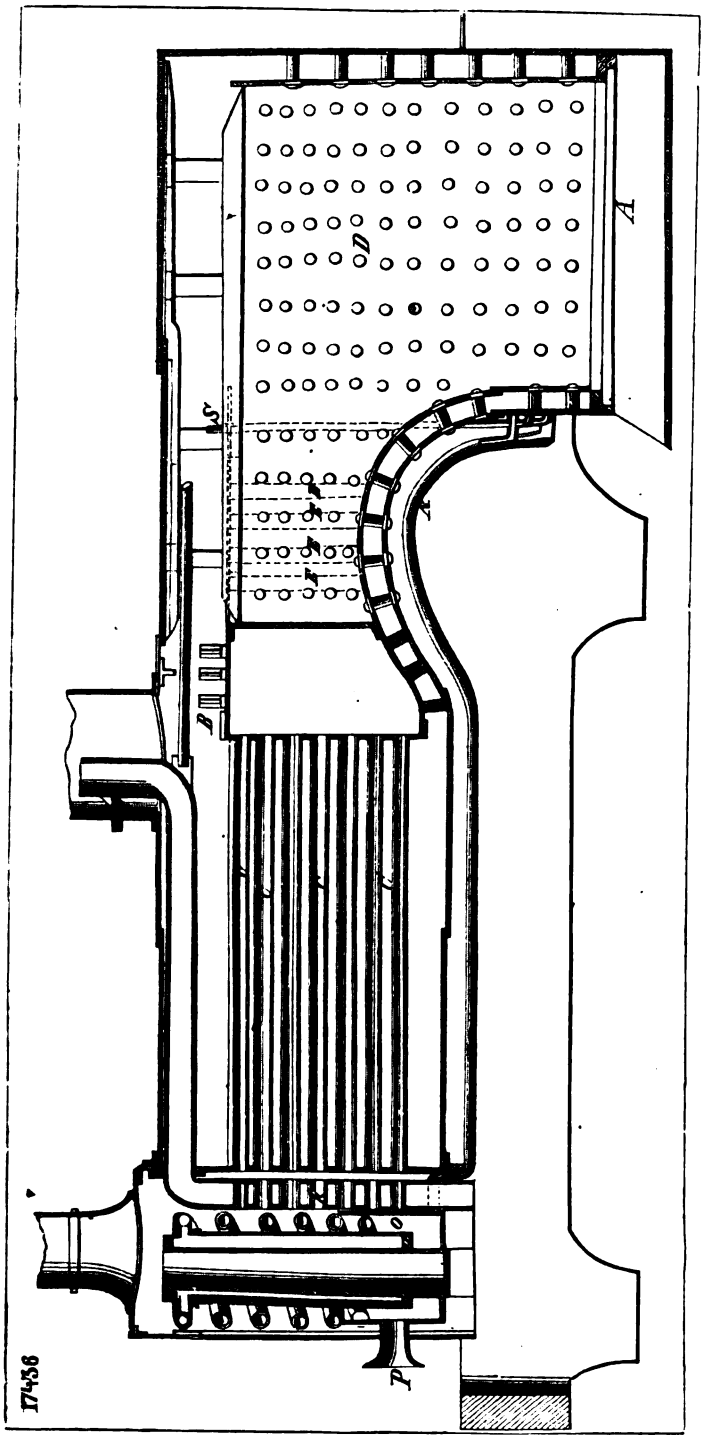
A
D
S
17456

16693

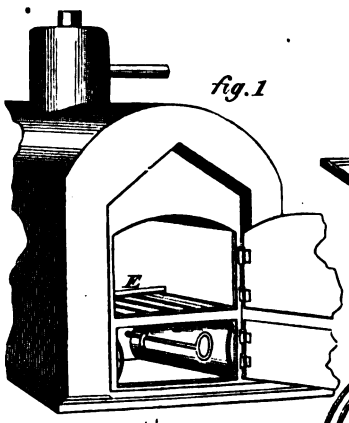

fig. 1

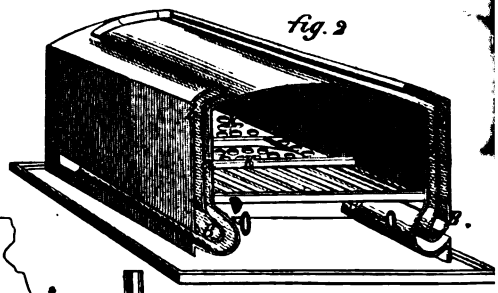

fig. 2

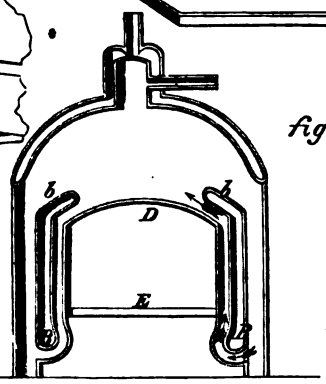

fig. 3

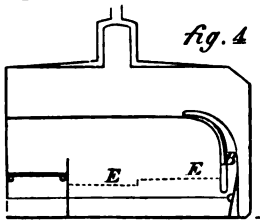

fig. 4

18276

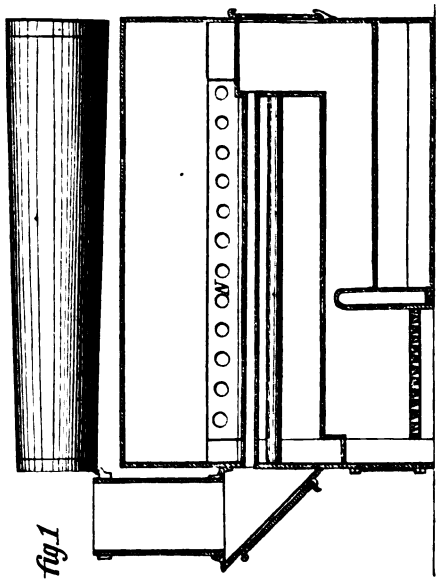

fig. 1

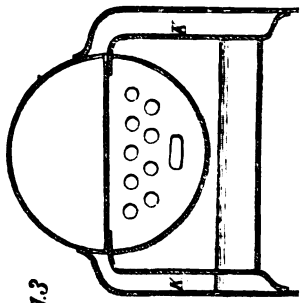

fig. 3

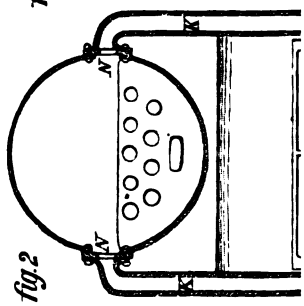

fig. 2

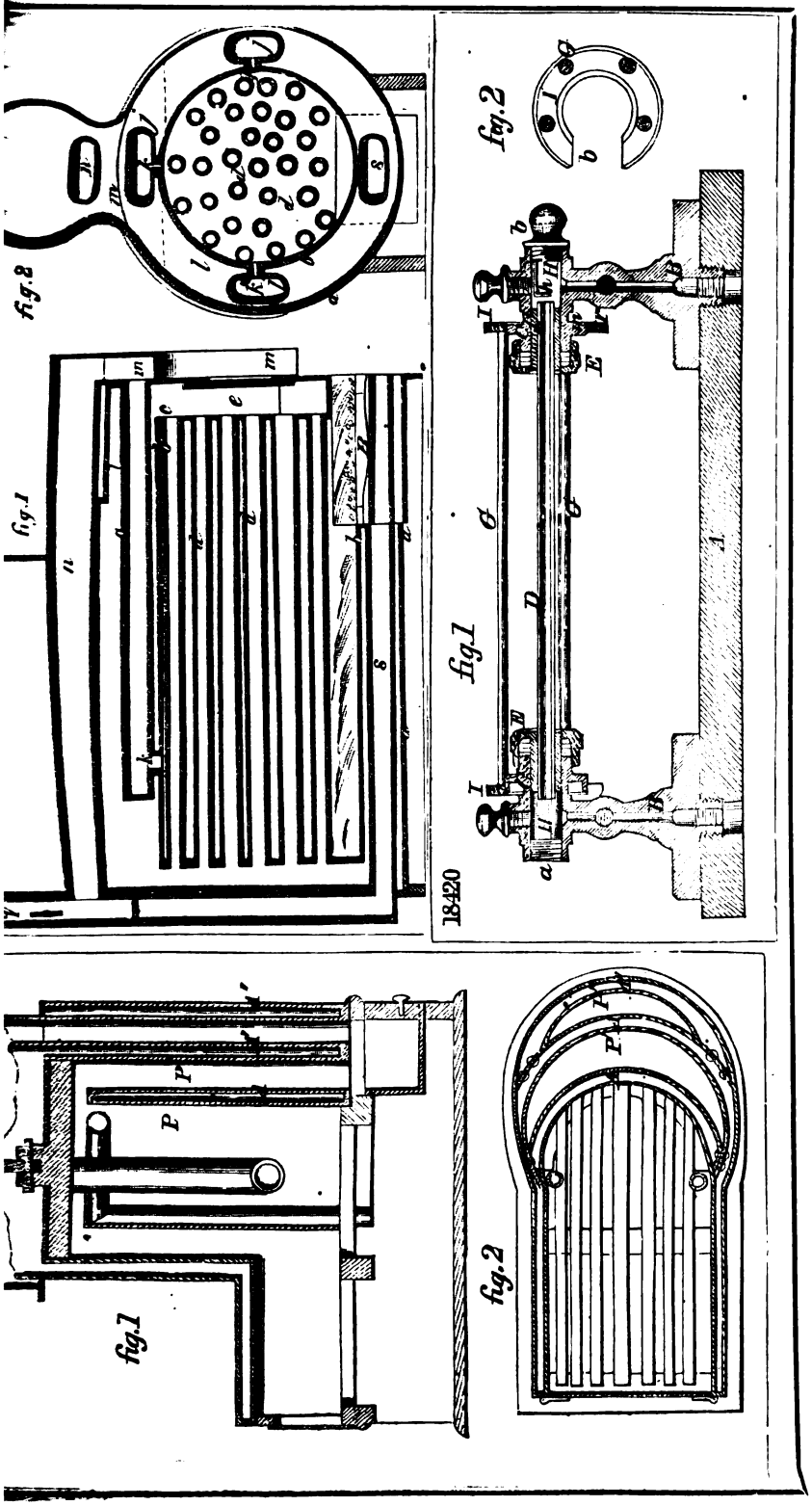
fig.2
fig.1
fig.2
fig.1
18420
fig.1
fig.2

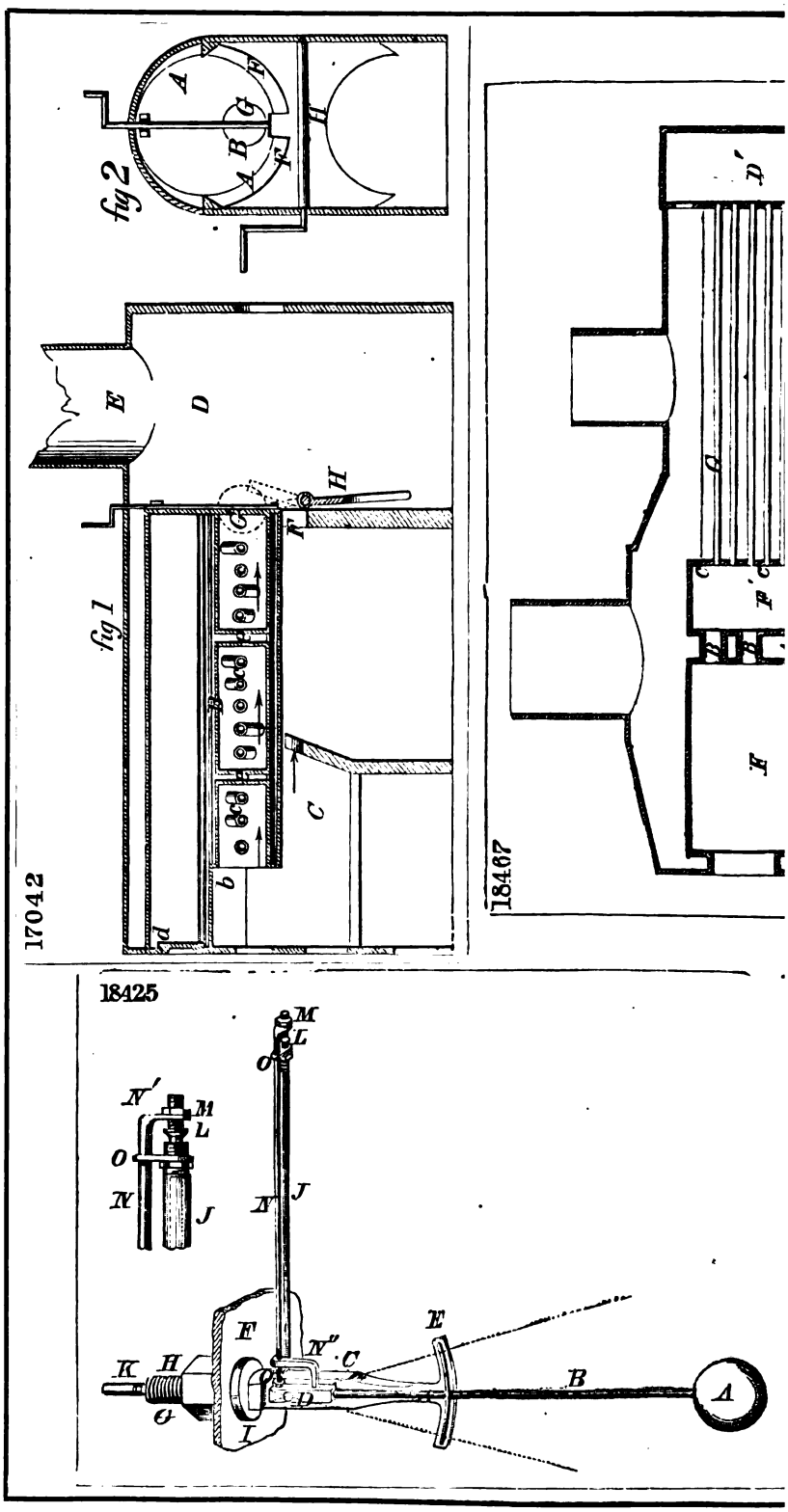
fig 2
fig 1
17042
18467
18425

17648

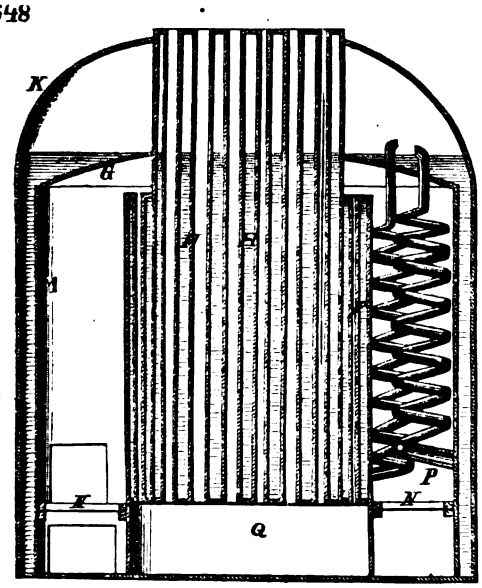

16940

fig.1

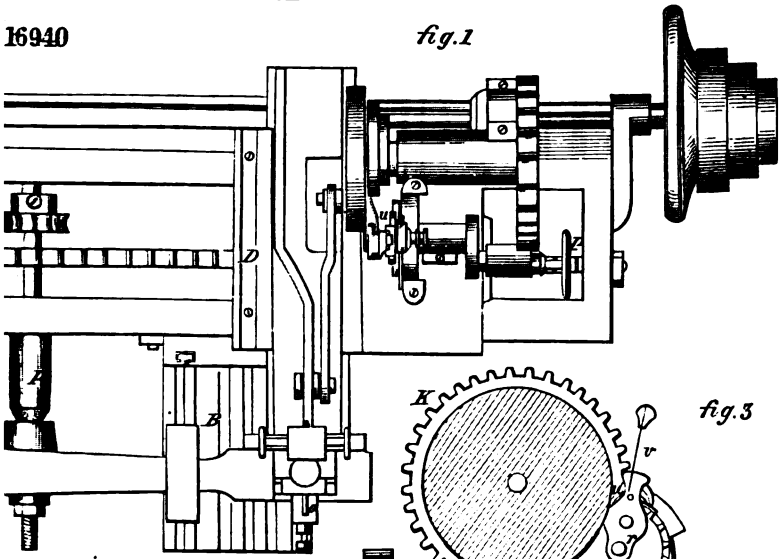

fig.3

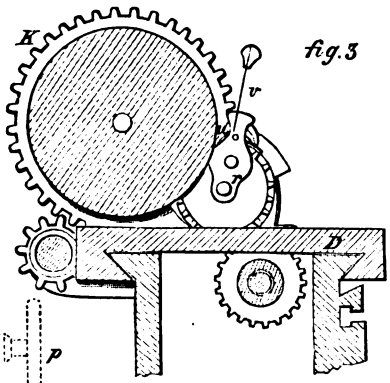

fig.2

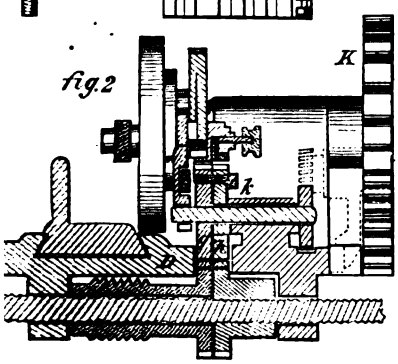

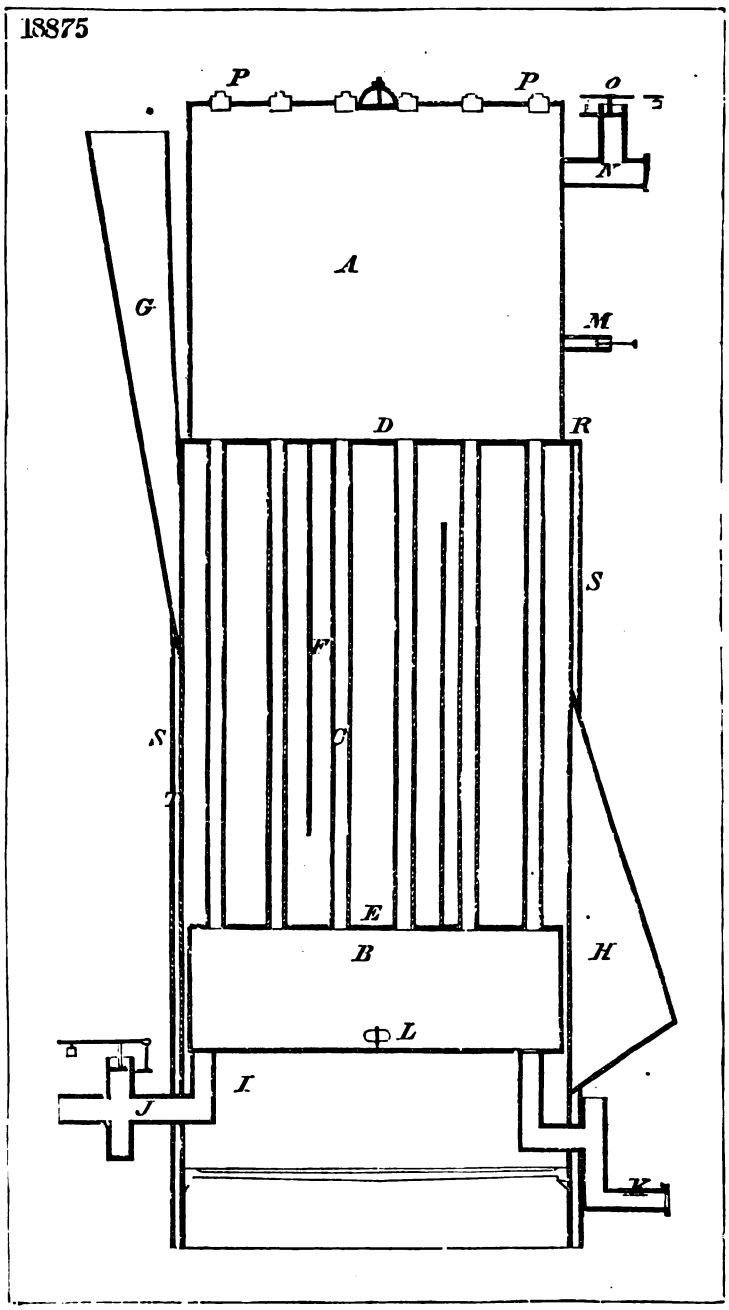
18875
P
P
O
N
A
G
M
D
R
S
F
S
C
T
E
B
H
L
I
J
K

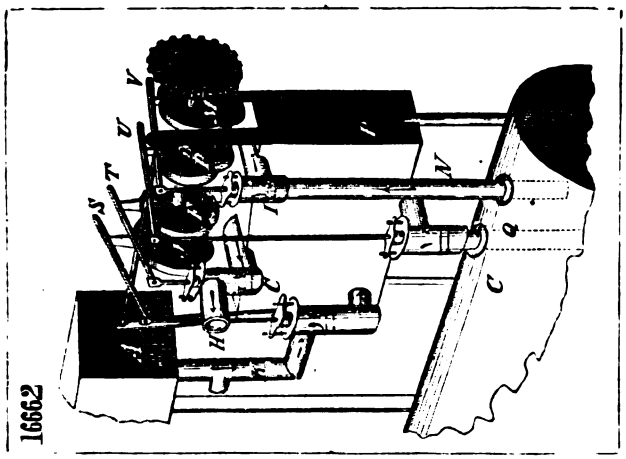
16662

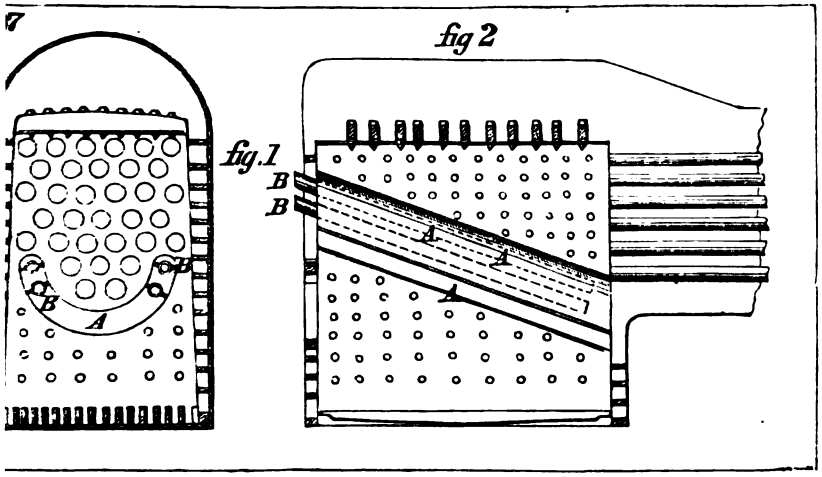
fig.1
fig 2
A
B
B
A
A
A
B
B

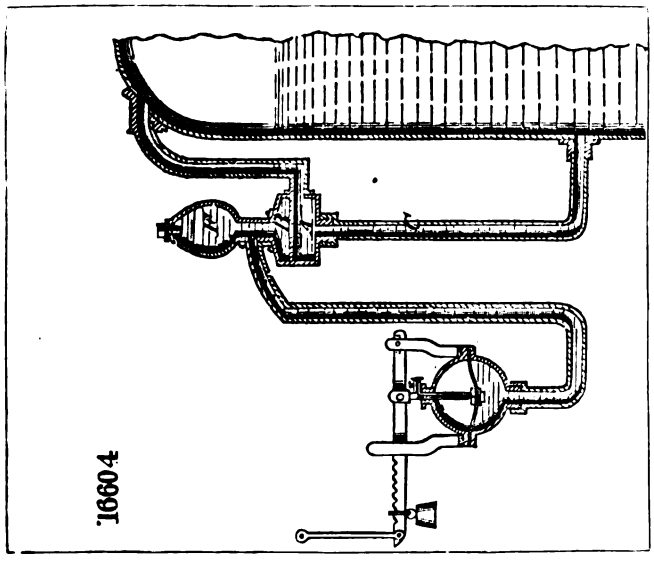
16604

17533

fig.1

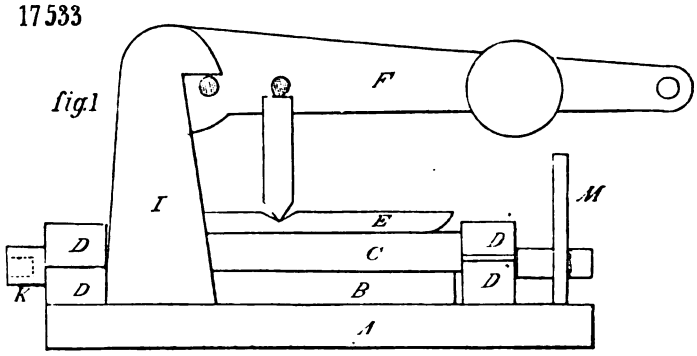

fig.2

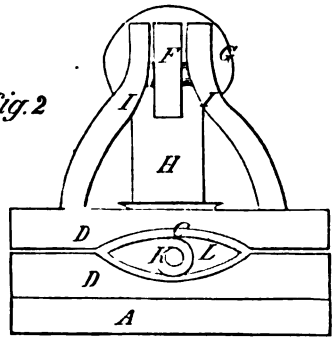

16664

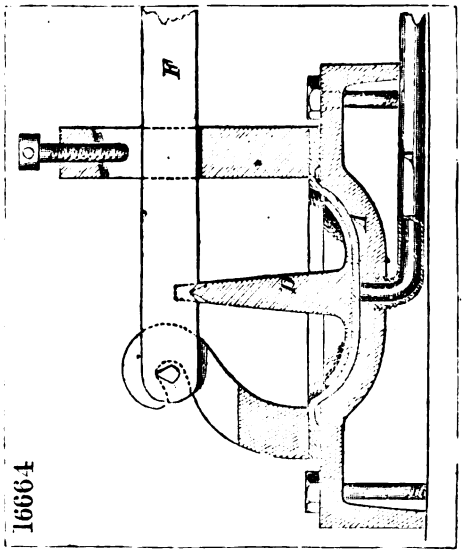

17472

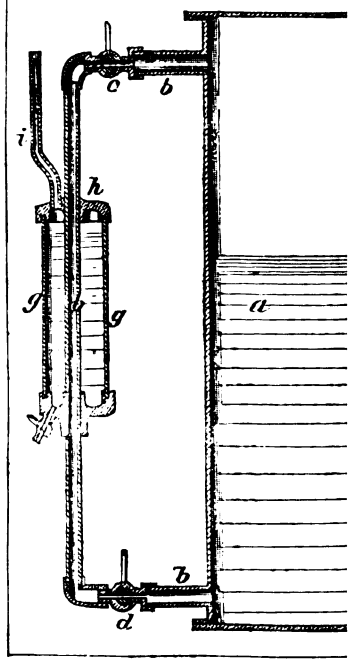

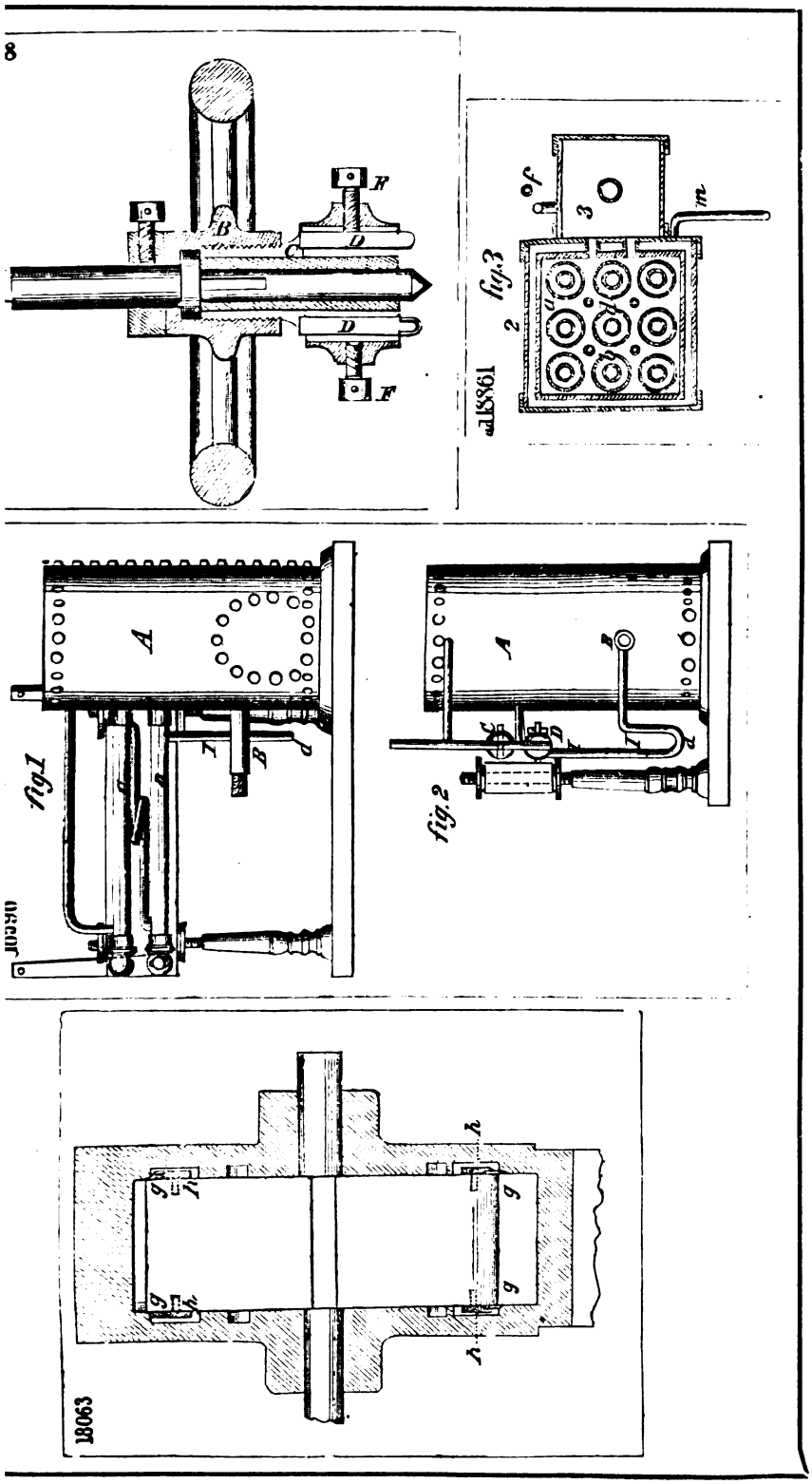
8
fig.3
18861
fig.1
fig.2
18063

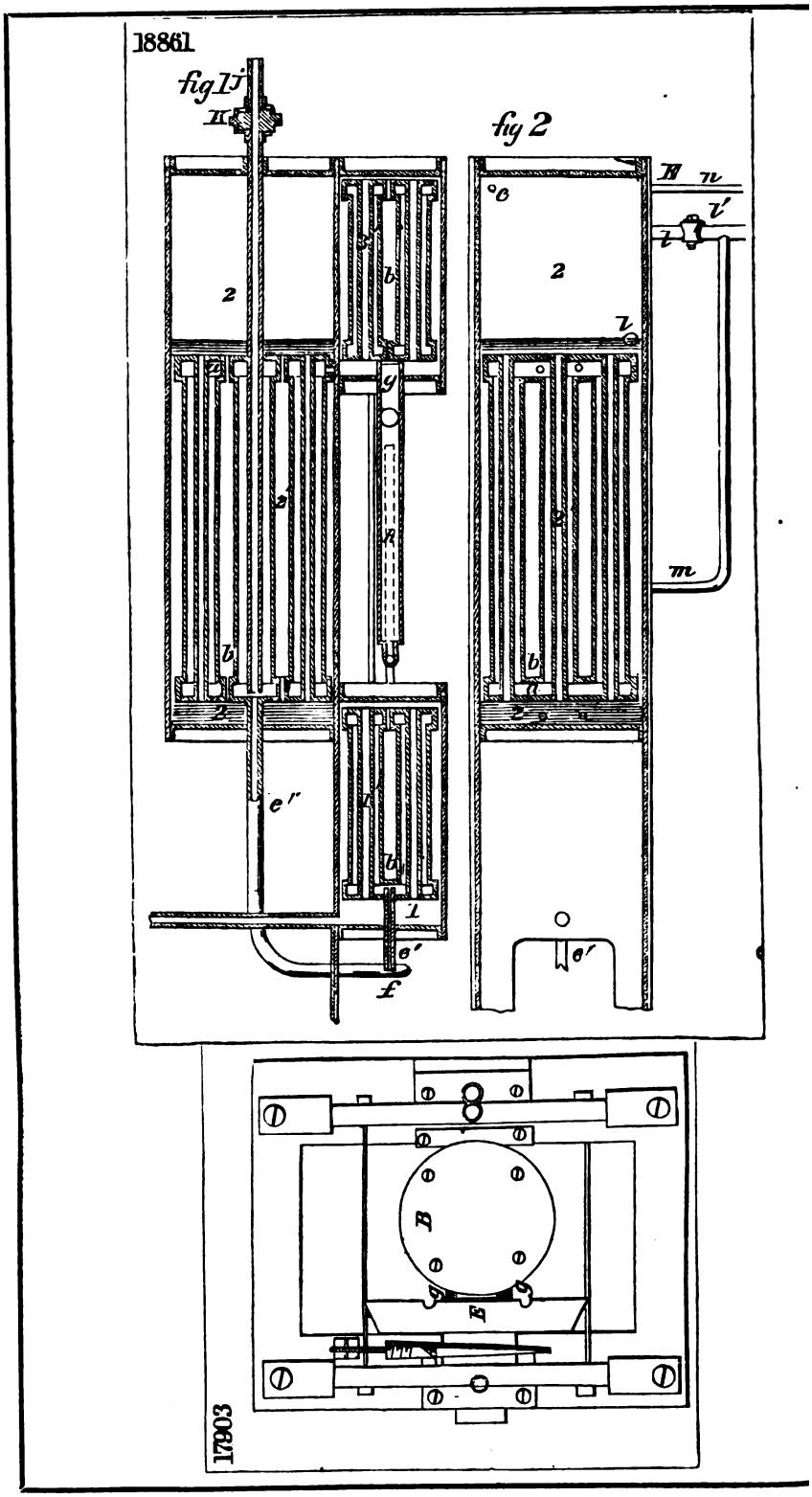
18861
fig 1
fig 2
17803

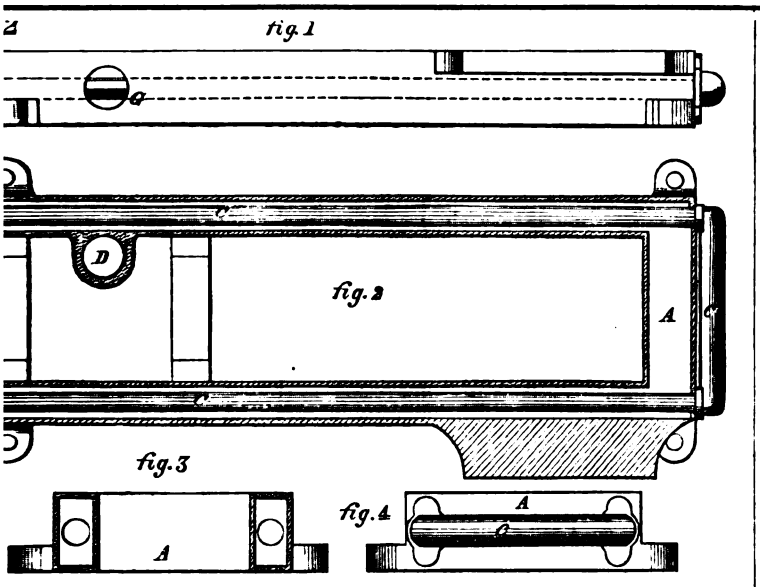
fig. 1
fig. 2
fig. 3
fig. 4
A
D

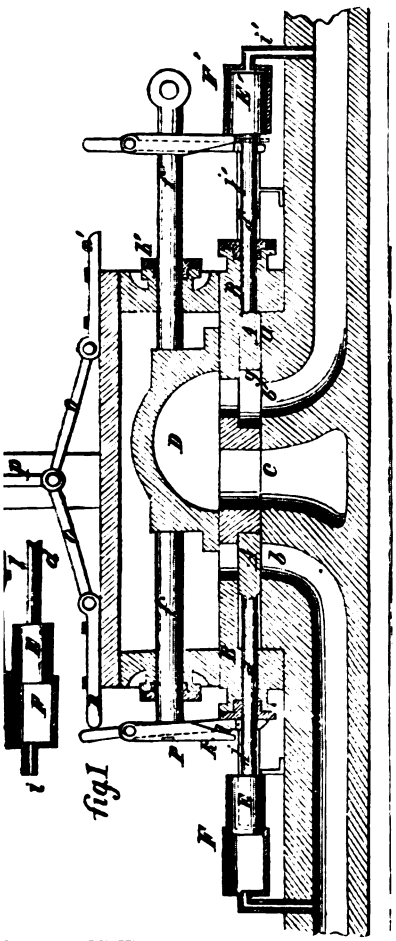
fig1

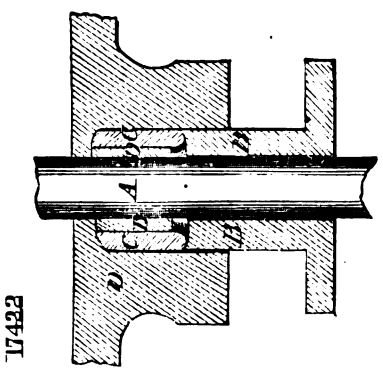
17422

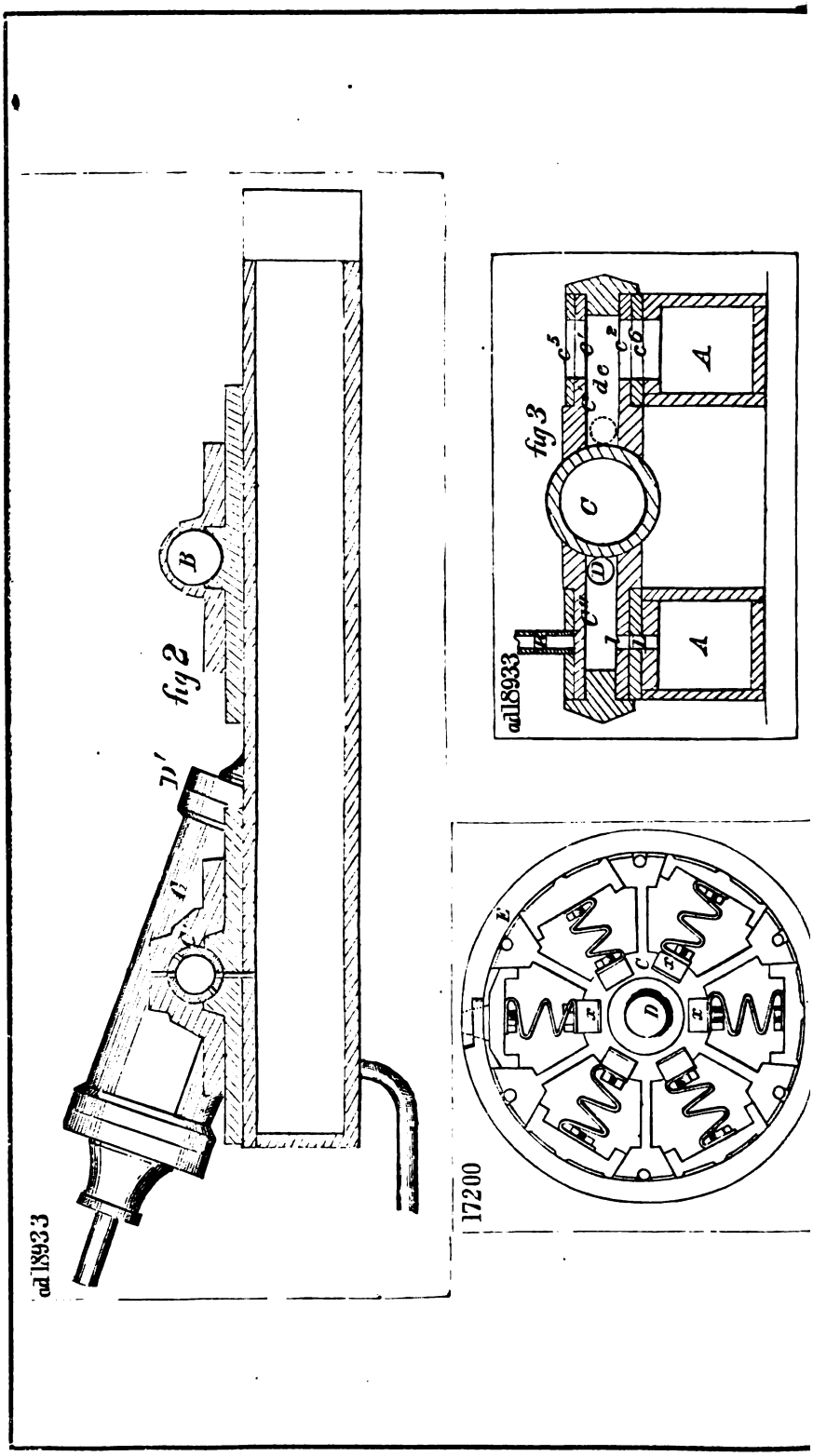
fig 2
fig 3
ad 18933
ad 18933
17200

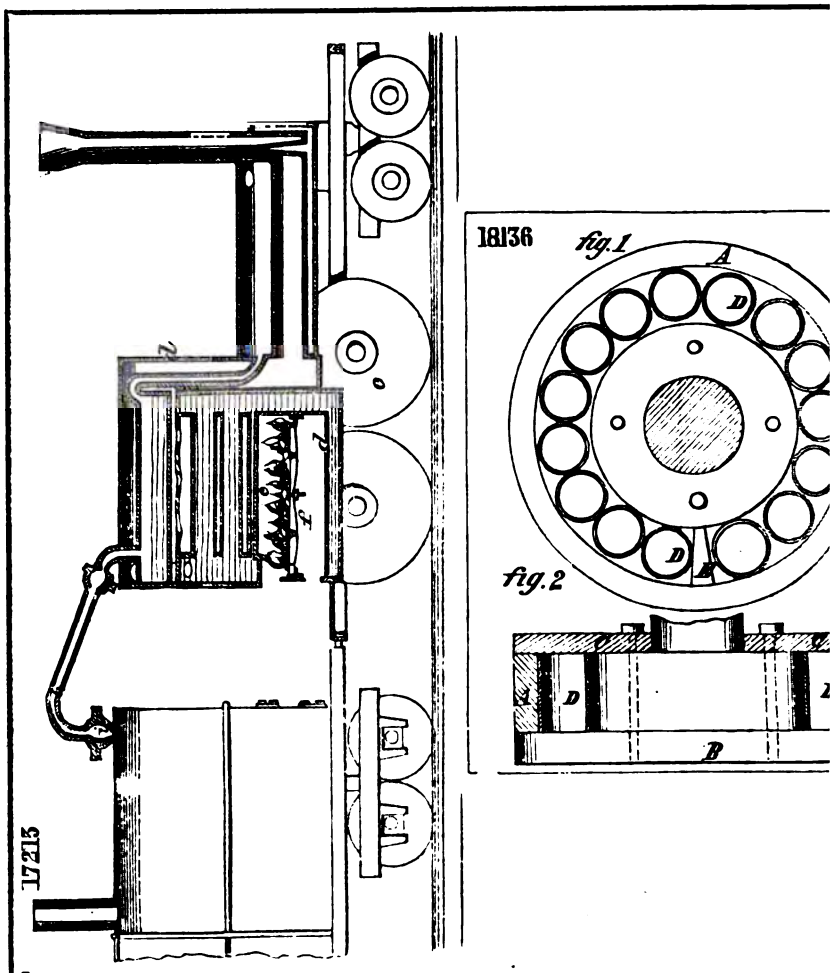
17215
18136
fig. 1
A
D
D
fig. 2
D
B

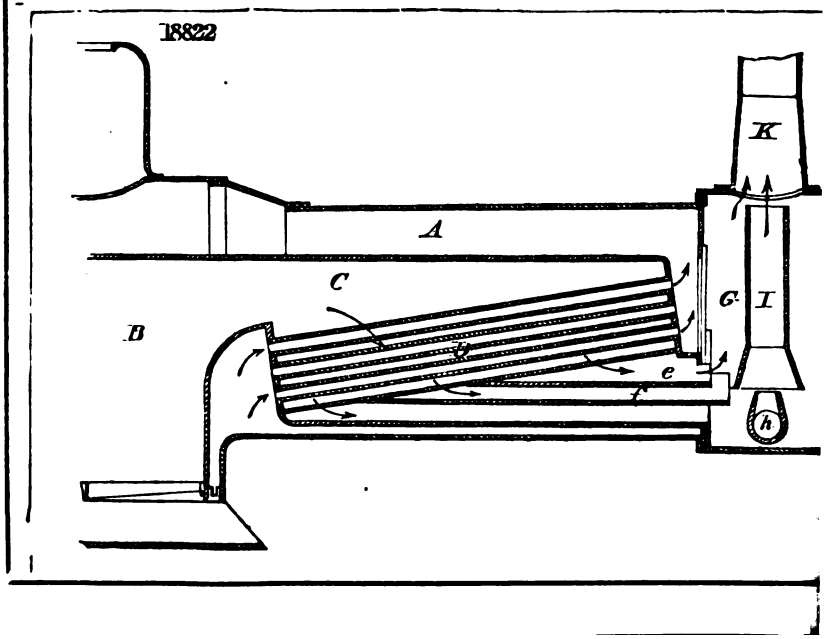
18822
K
A
C
G
I
B
e
h

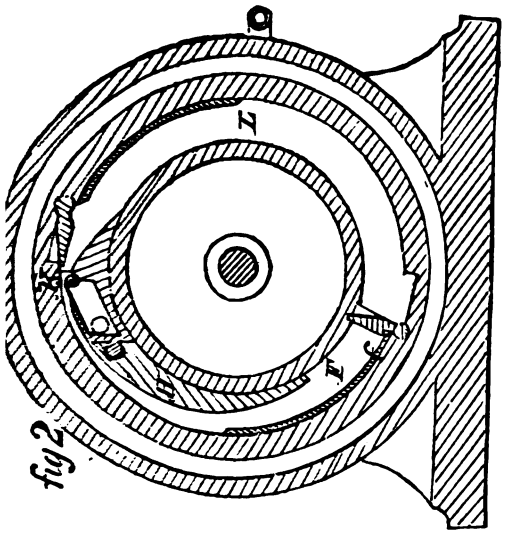

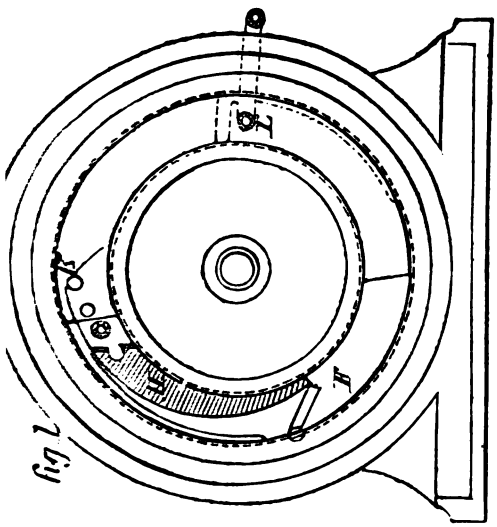

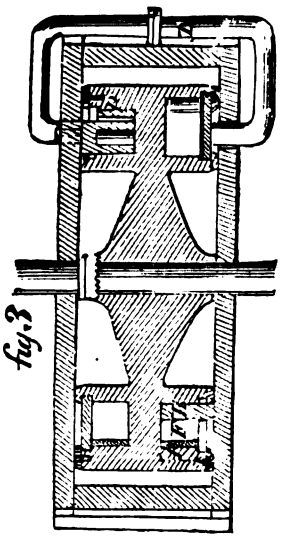

17623

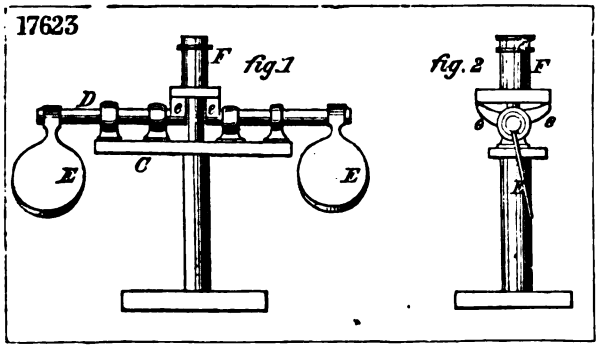

18997

fig 1

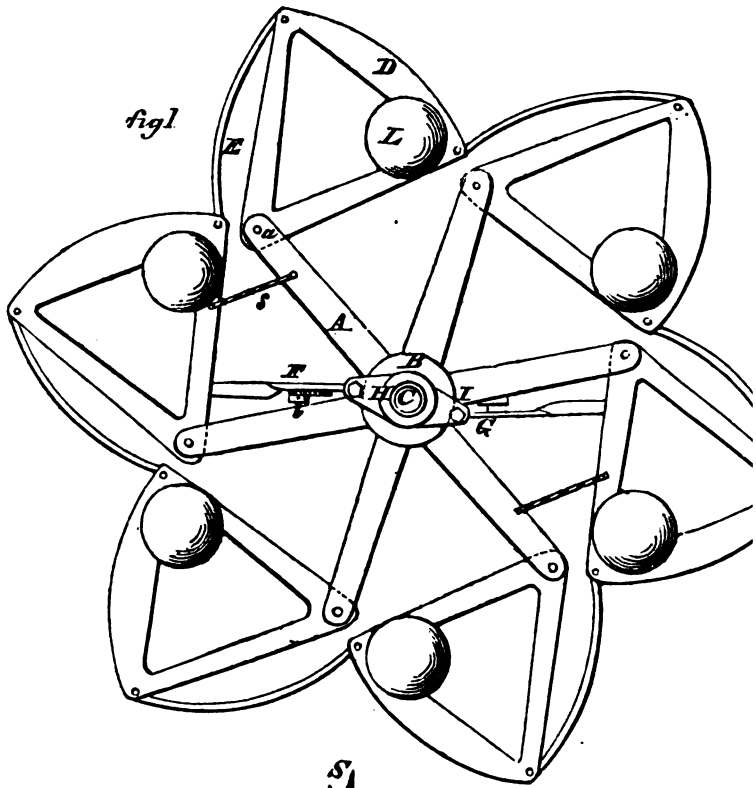

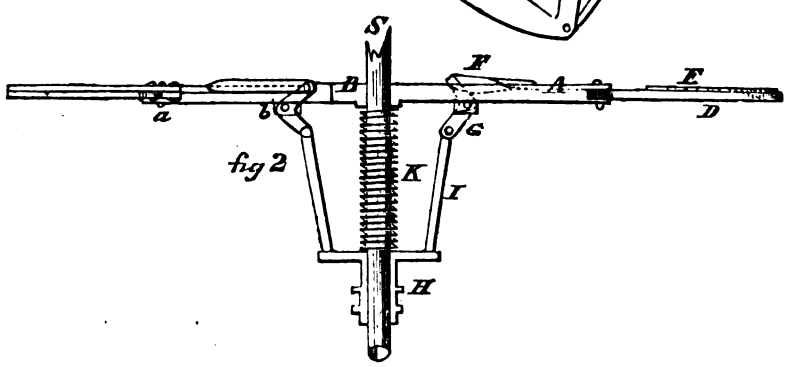

fig 2

17215

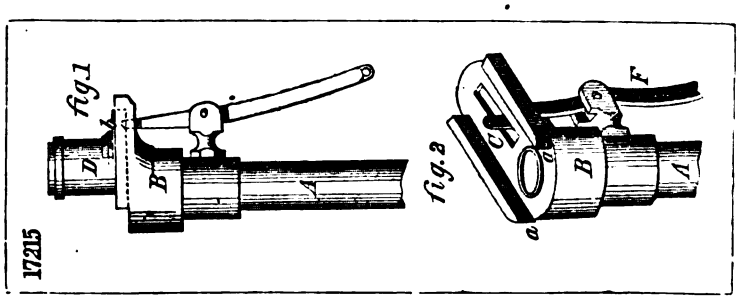

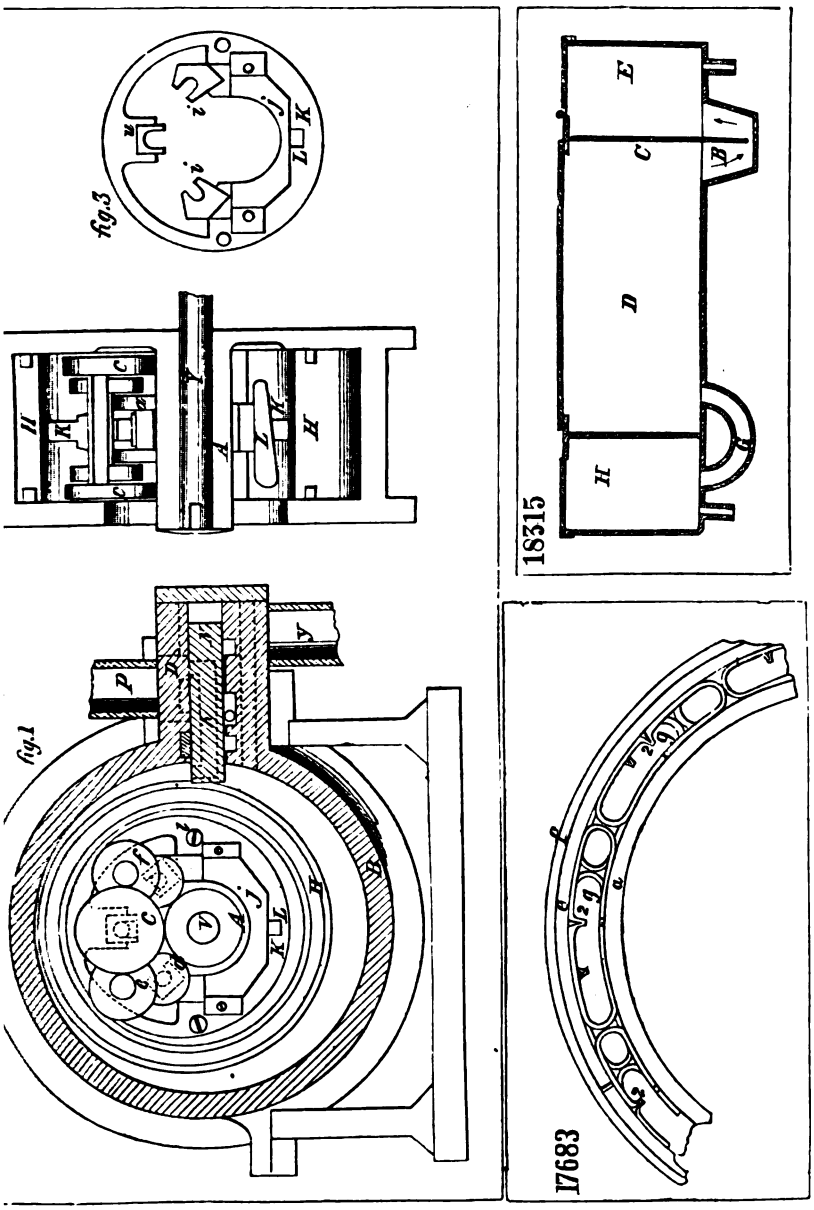
fig.1
fig.3
18315
17683

18989

fig 1

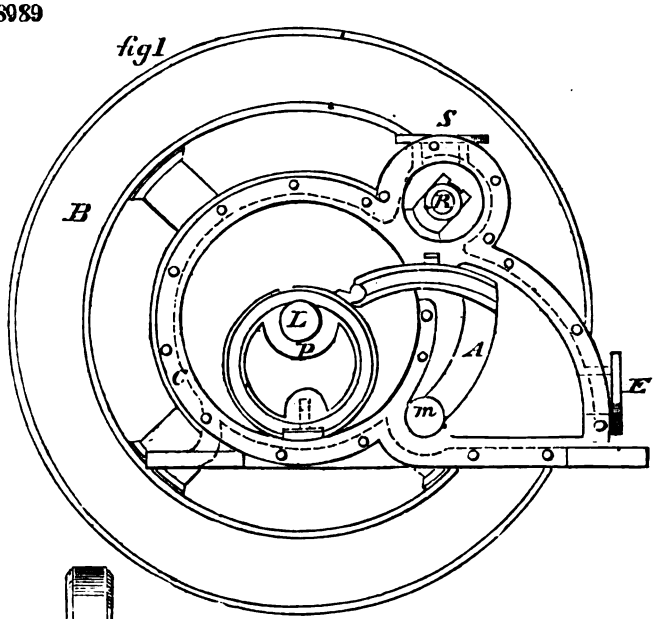

fig 2

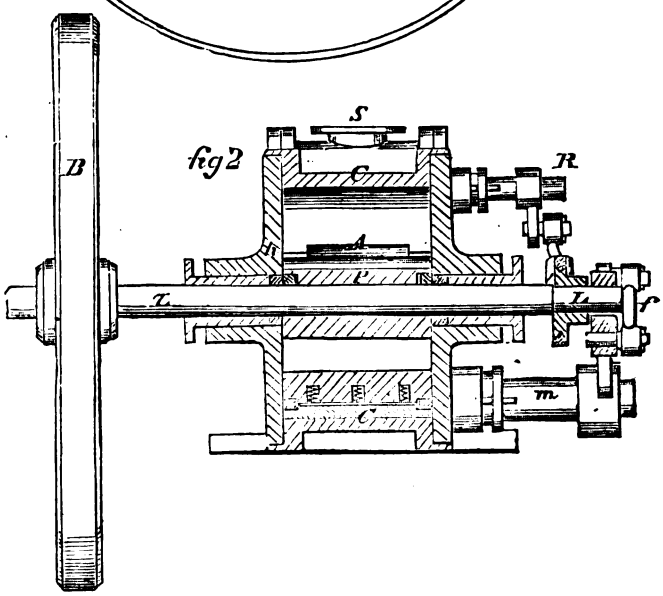

17855

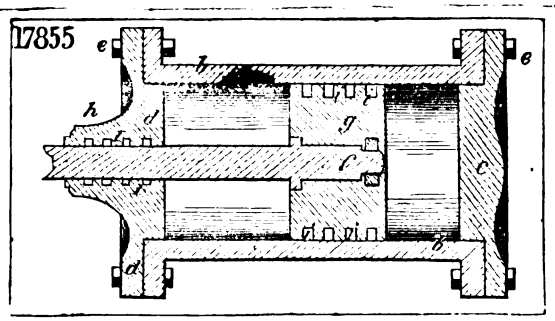

17271

fig.1

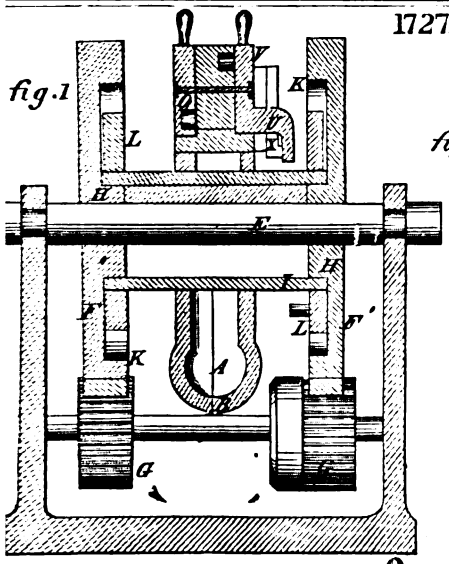

fig.2

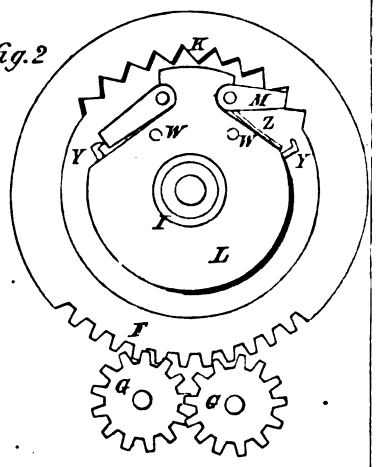

fig.3

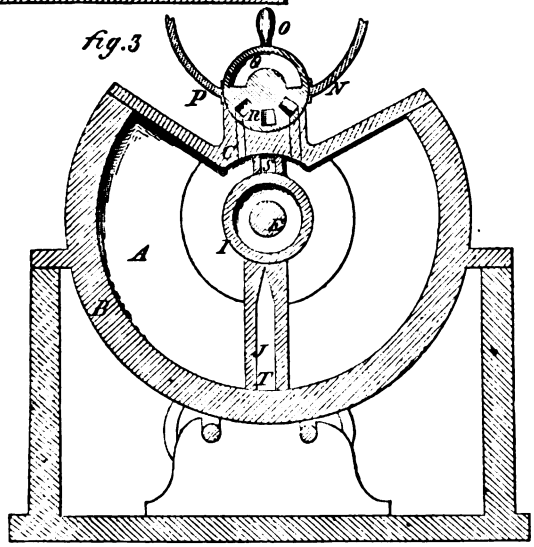

1793 fig.1

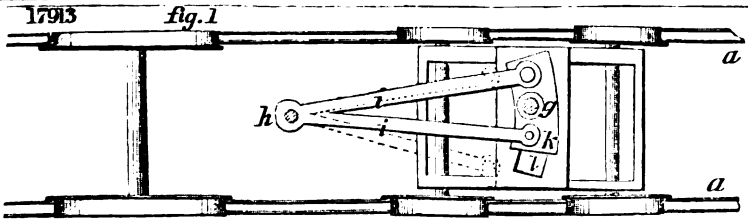

fig.2

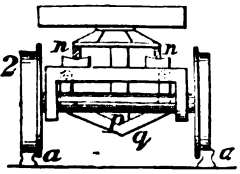

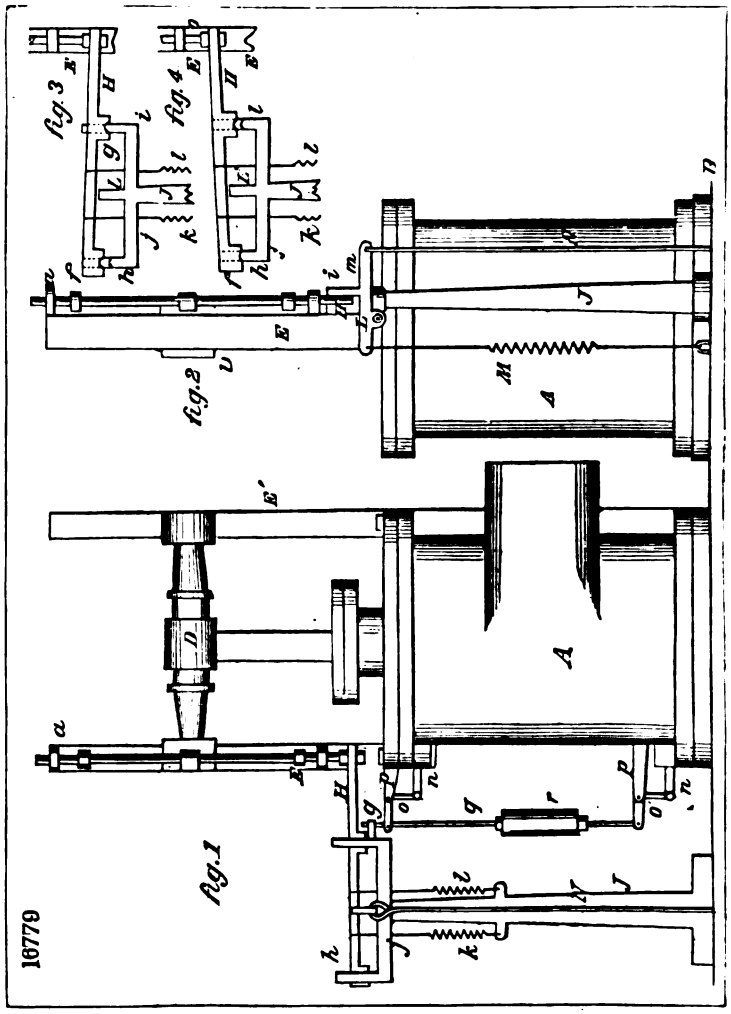
fig. 3
fig. 4
fig. 2
fig. 1
16779

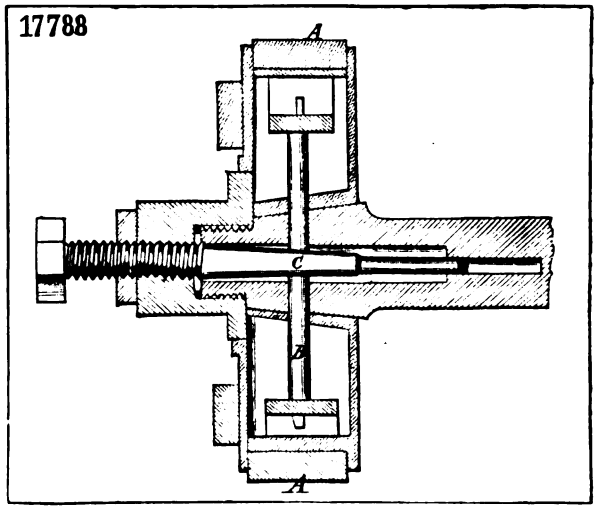
17788

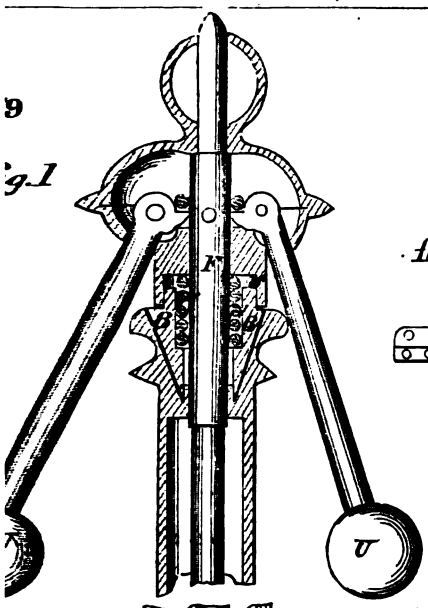

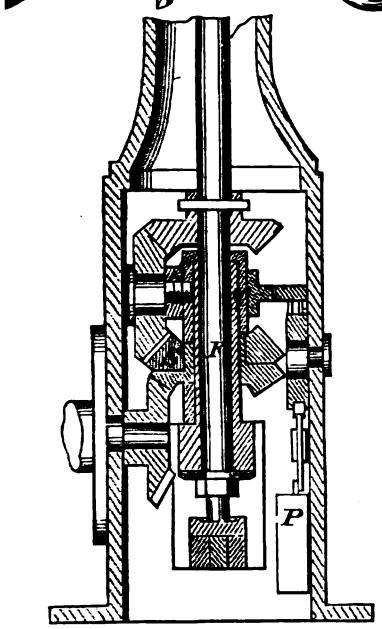

fig.2

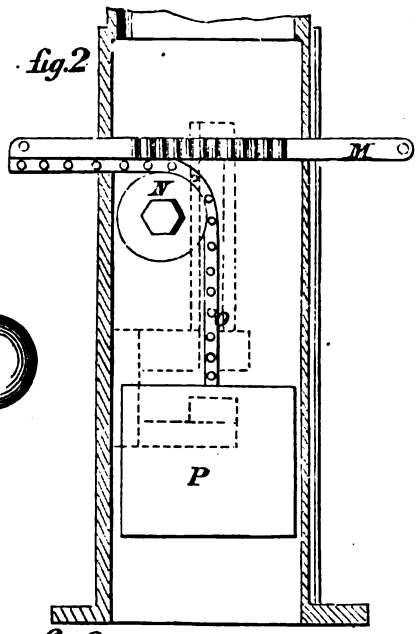

fig.3

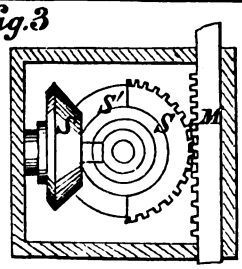

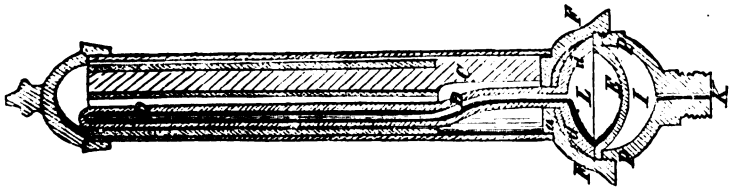

817

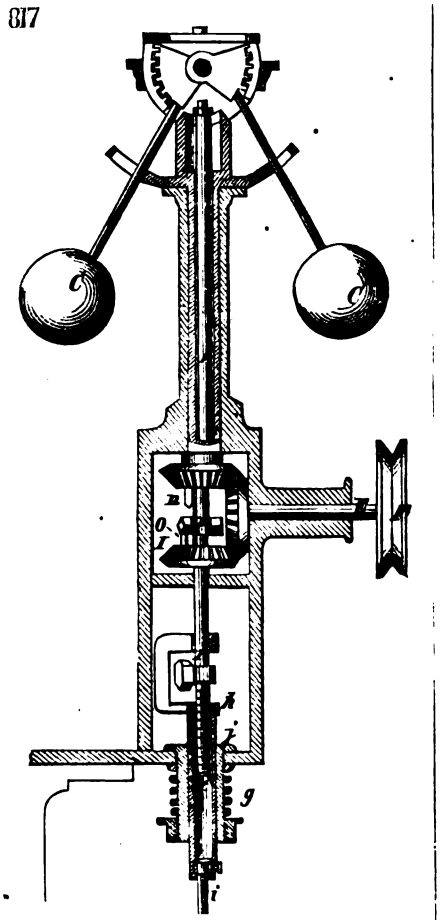

17675

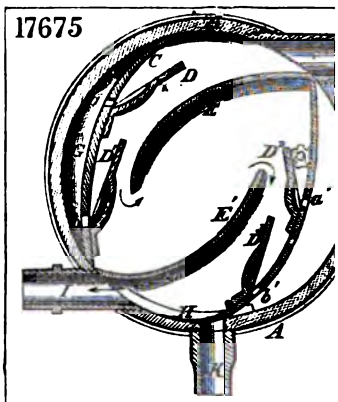

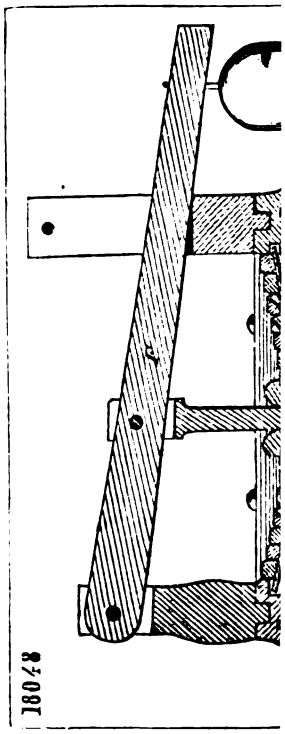

17988

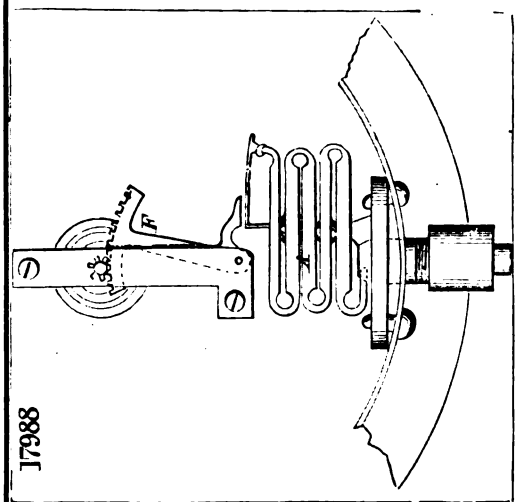

18563

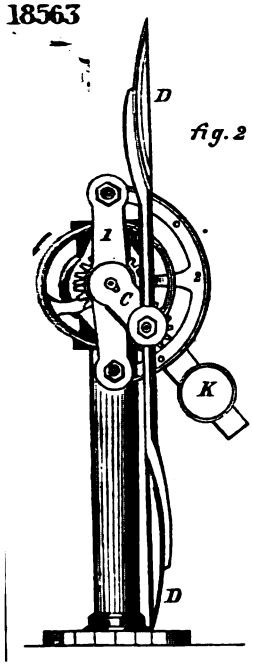

fig. 2

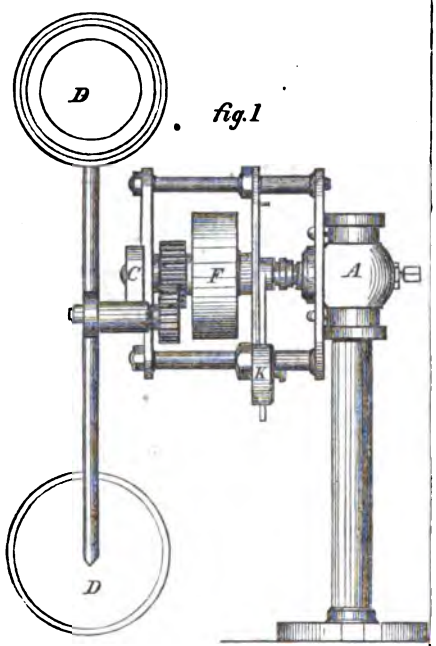

fig. 1

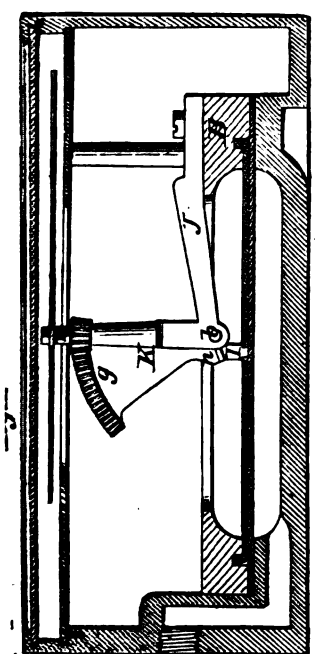

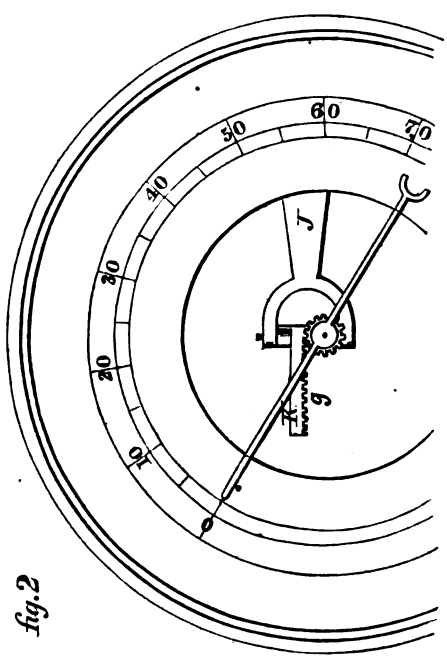

fig. 2

17560

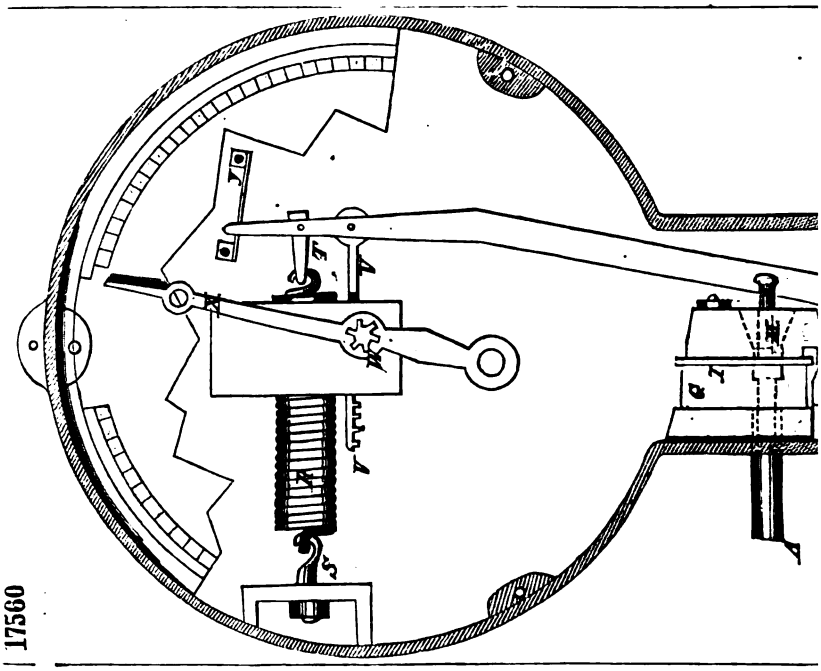

18526

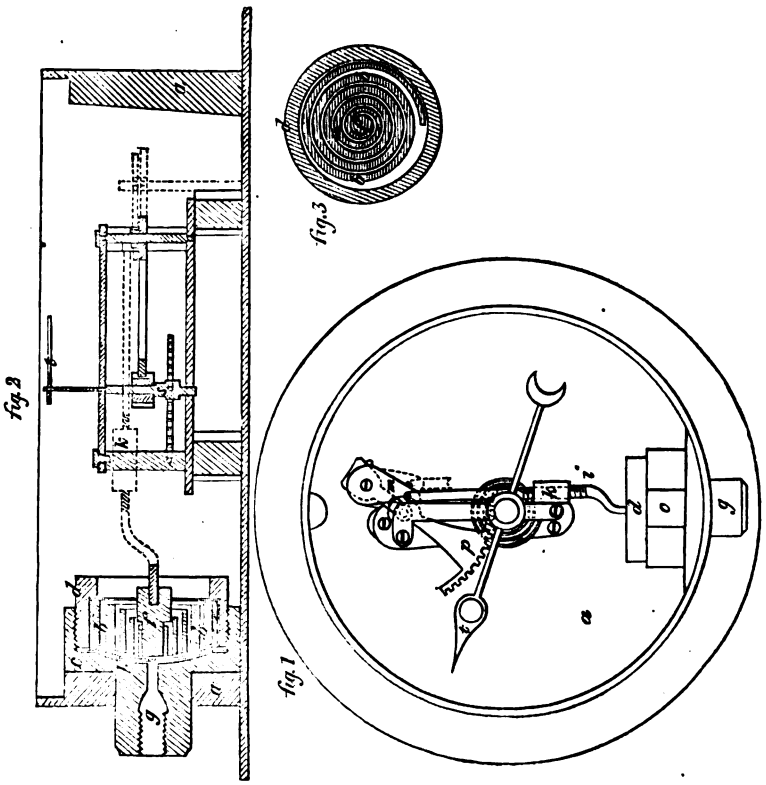

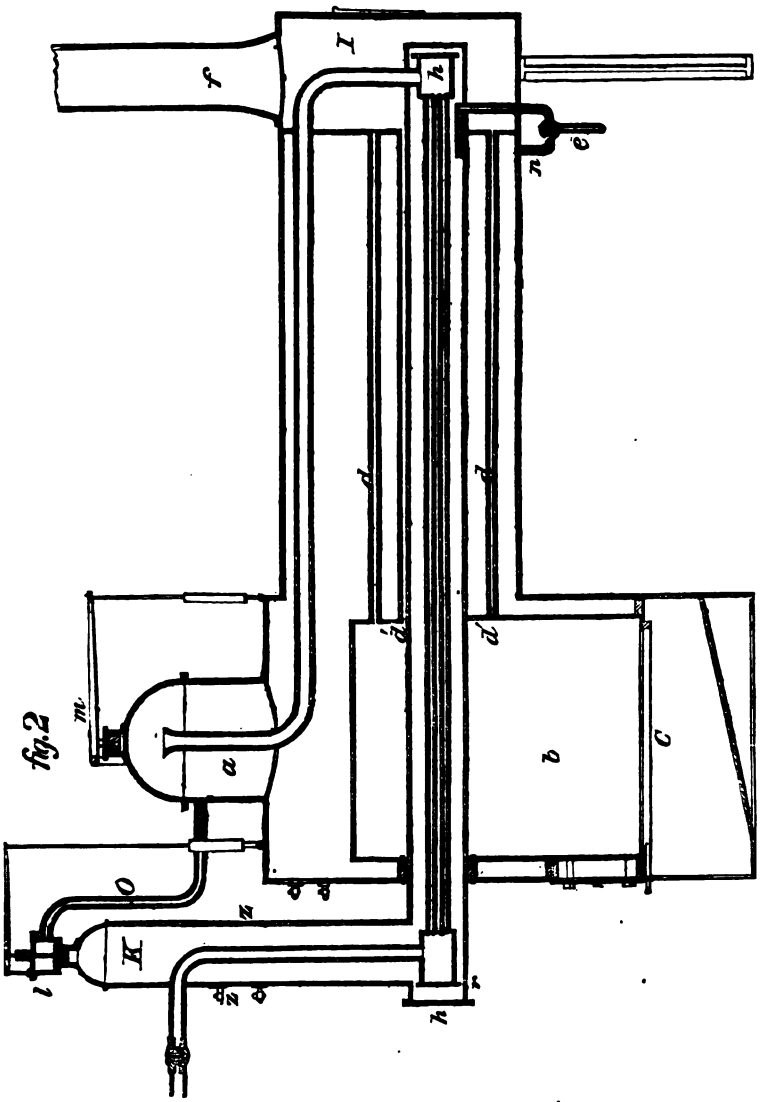

fig. 2

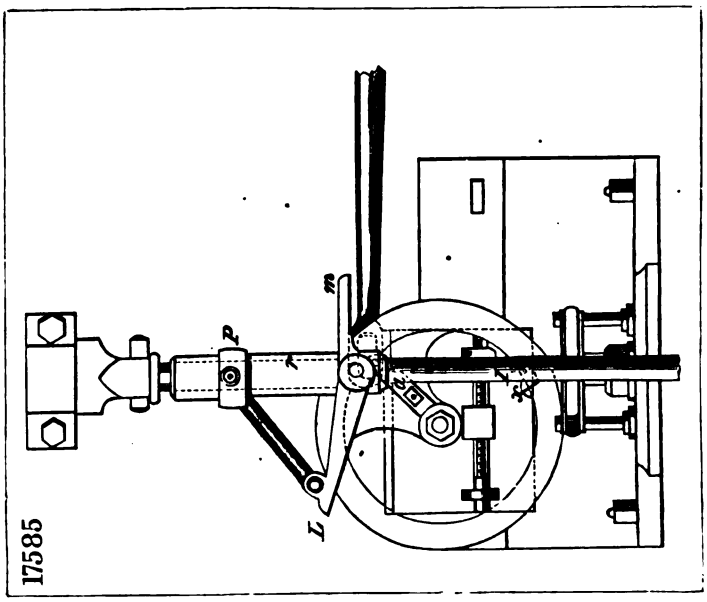
m
p
L
17585

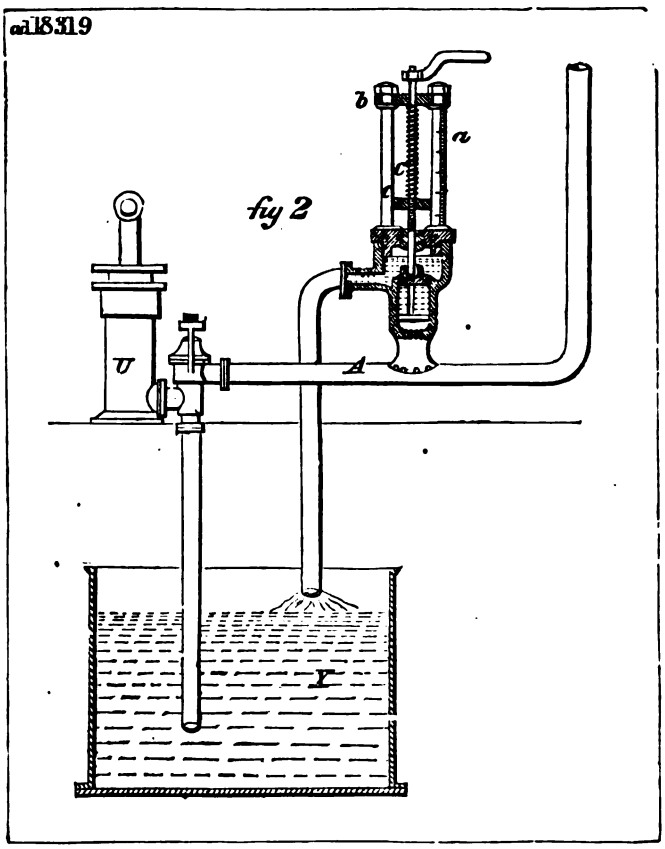
18319
fig 2
b
a
c
U
A
V

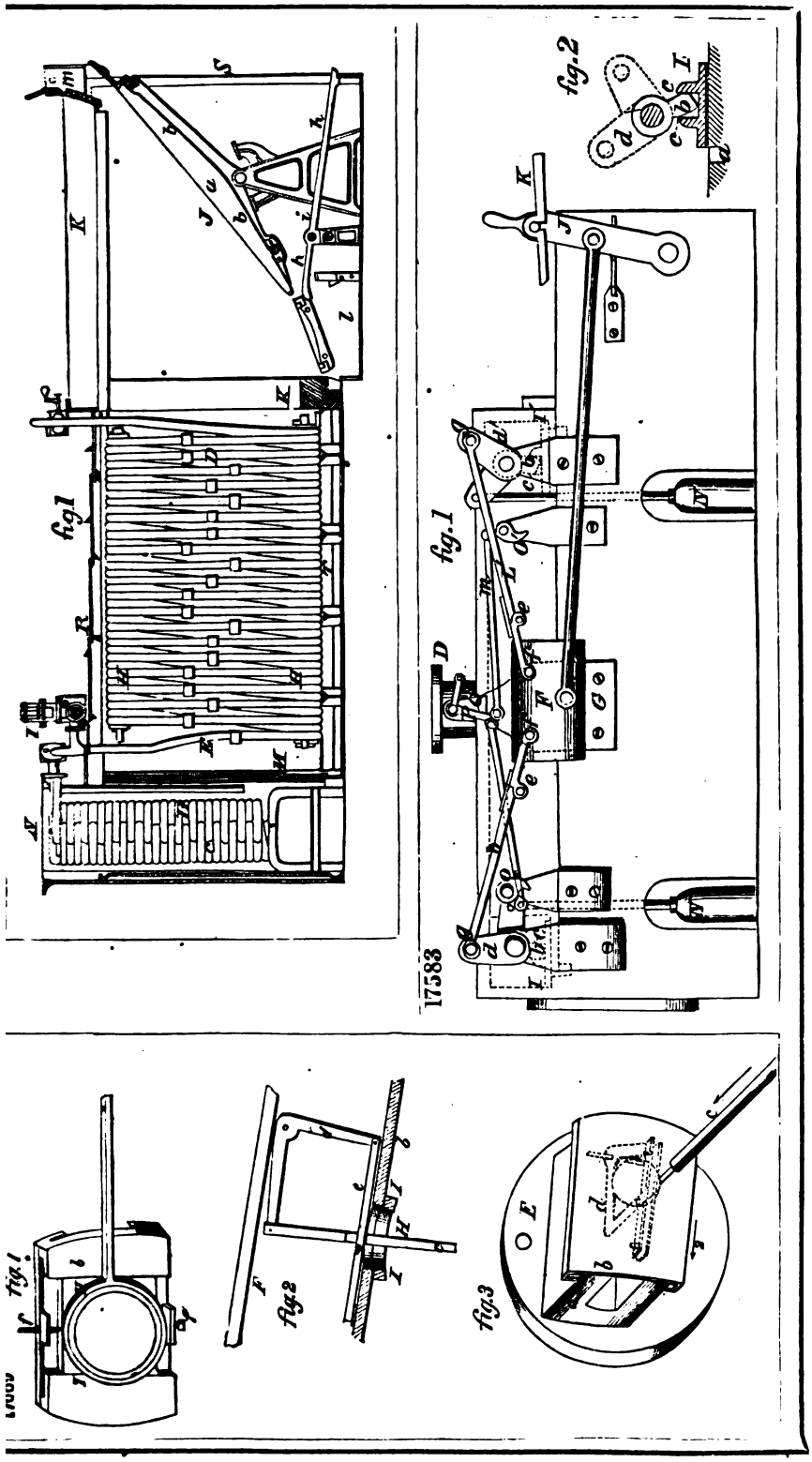
fig.1
fig.1
fig.2
17583
fig.1
fig.2
fig.3

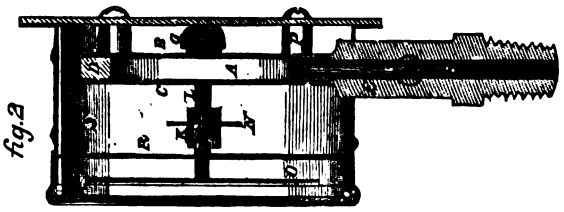

fig. 2

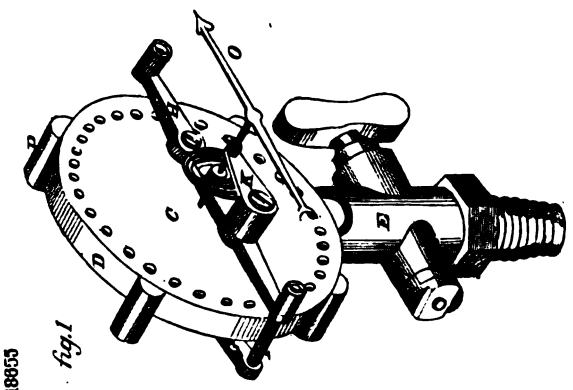

fig. 1

18655

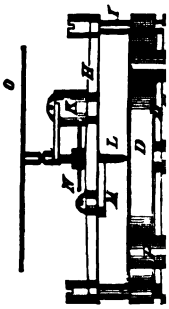

fig. 3

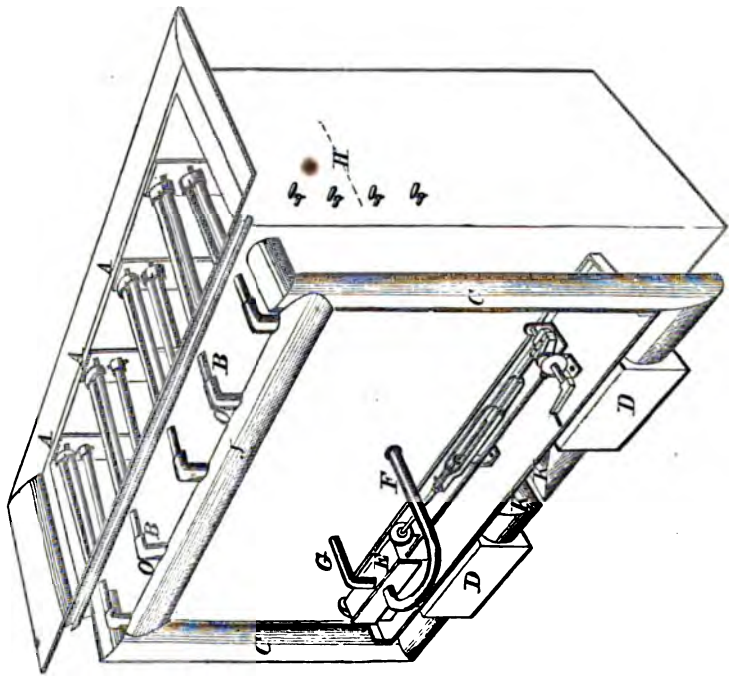

18460

18786

fig.1

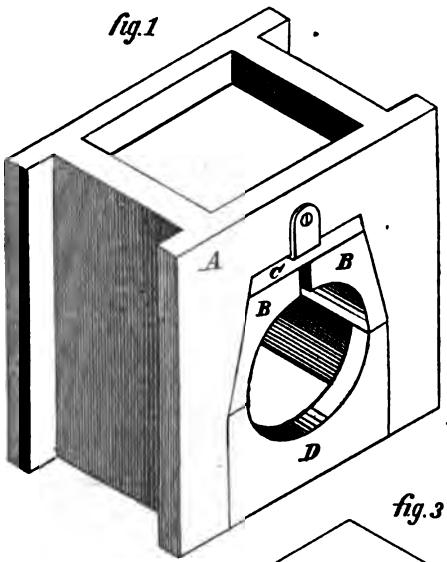

fig.3

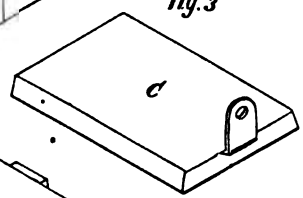

fig.2

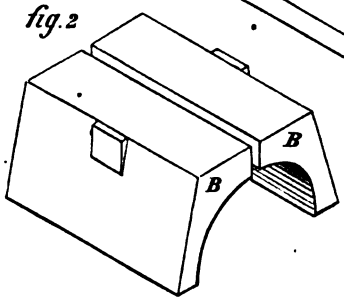

17859

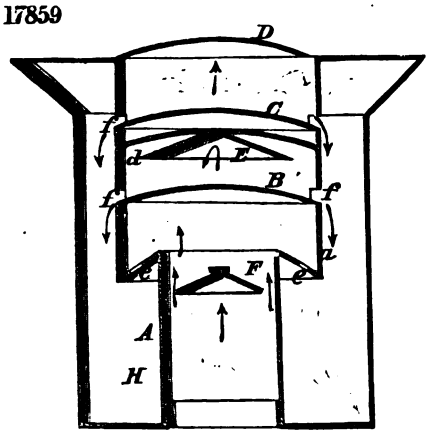

17834

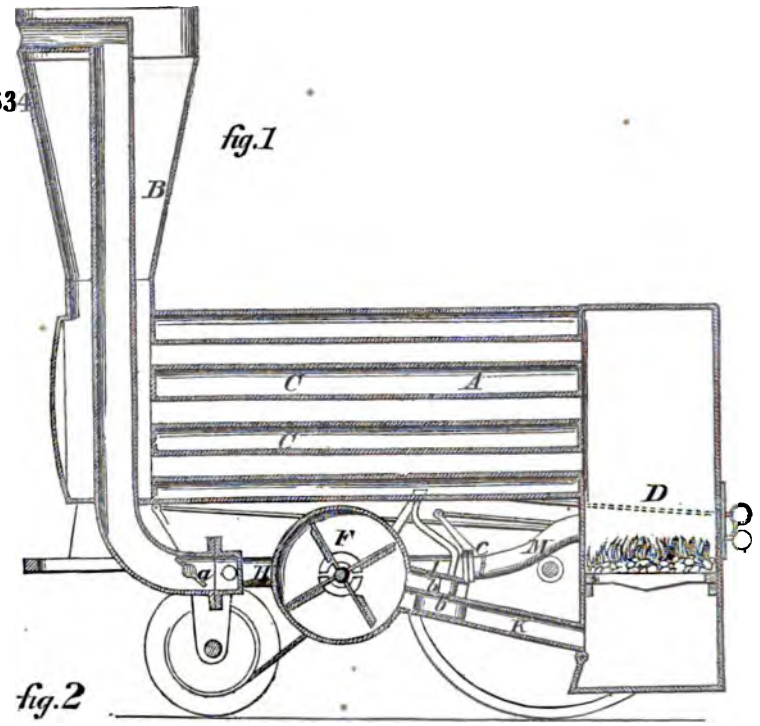

17875

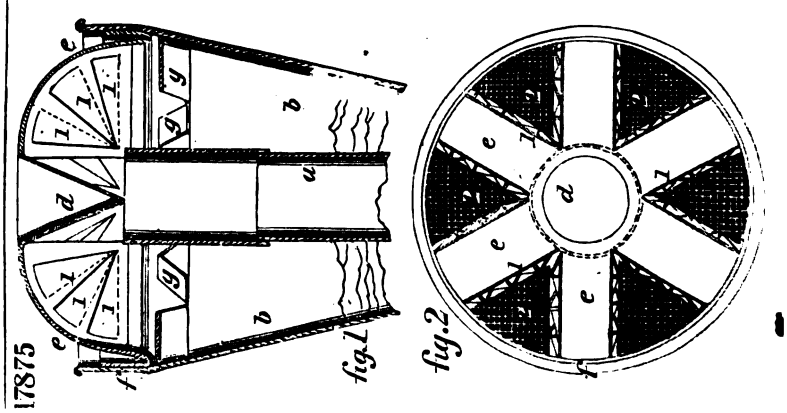

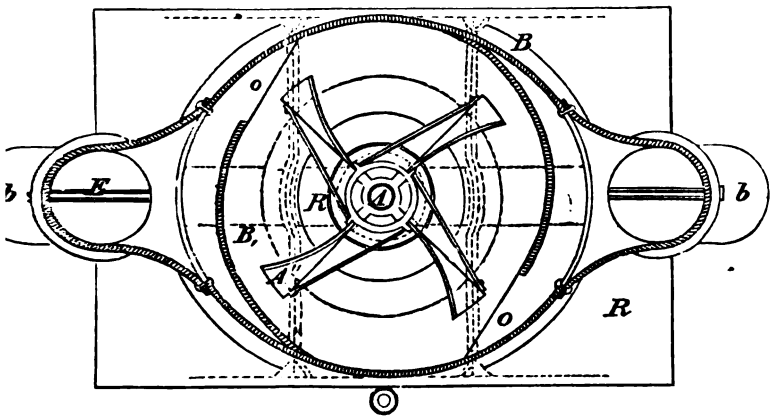

)000

fig 1

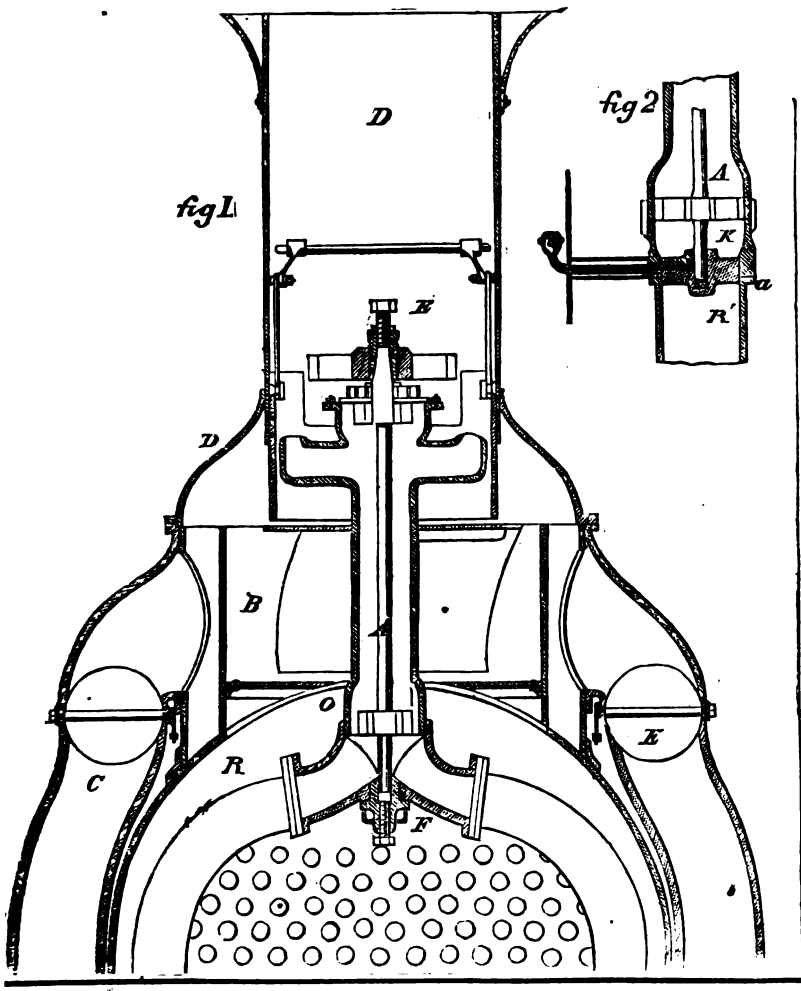

fig 2

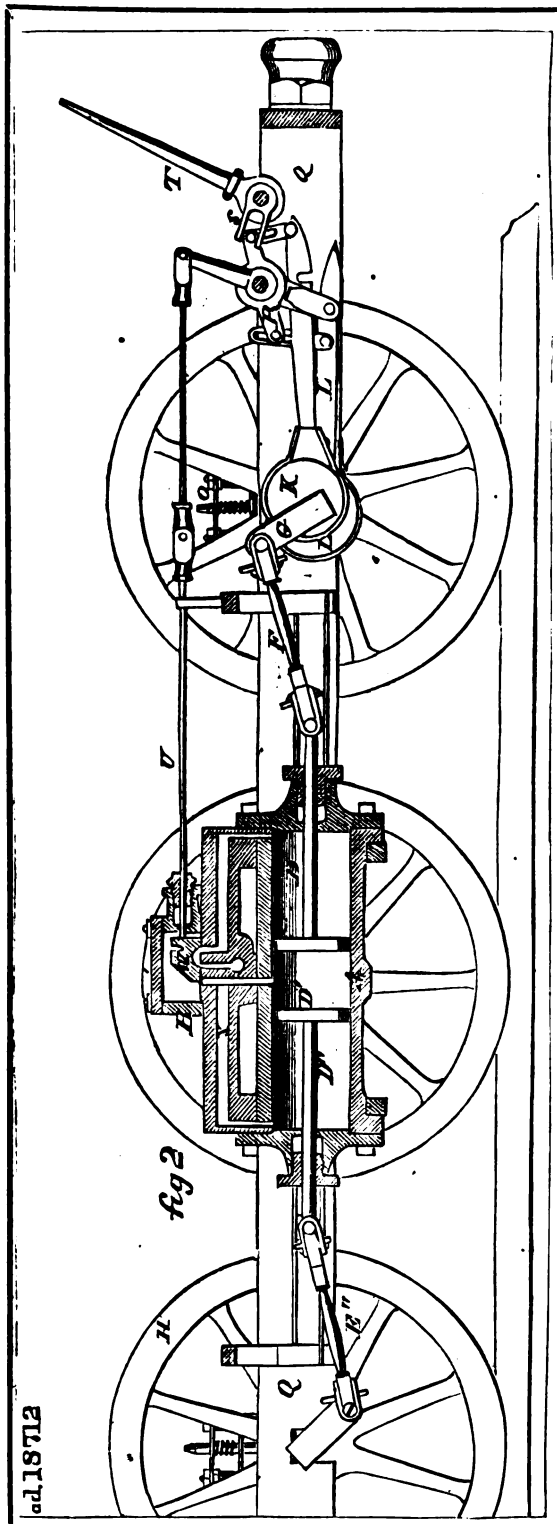

17069

fig 1

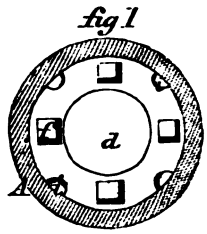

fig.2

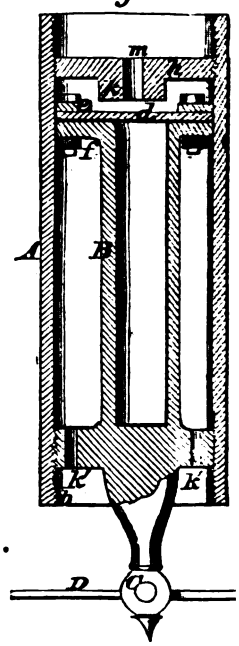

2

fig 1

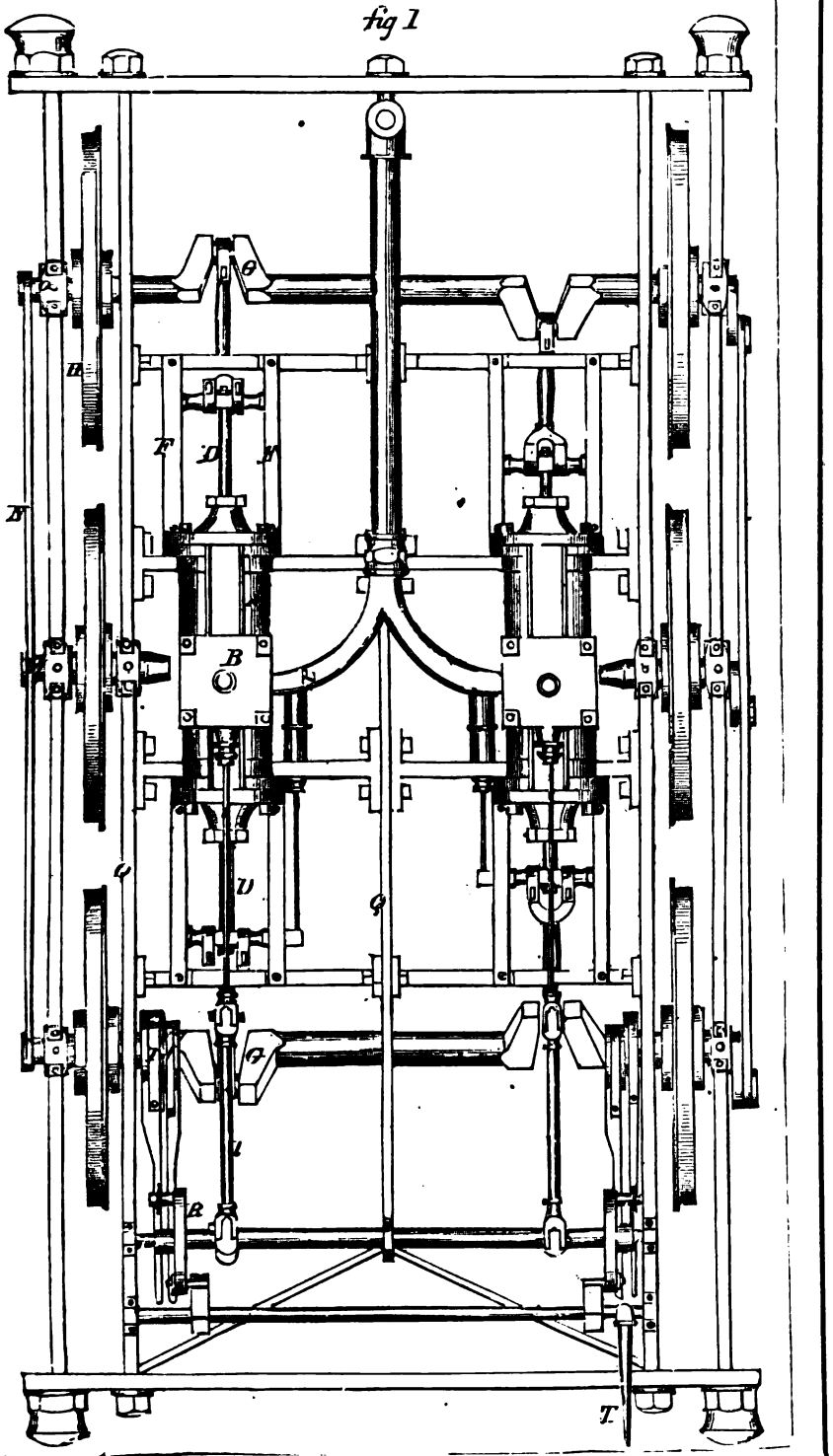

17847

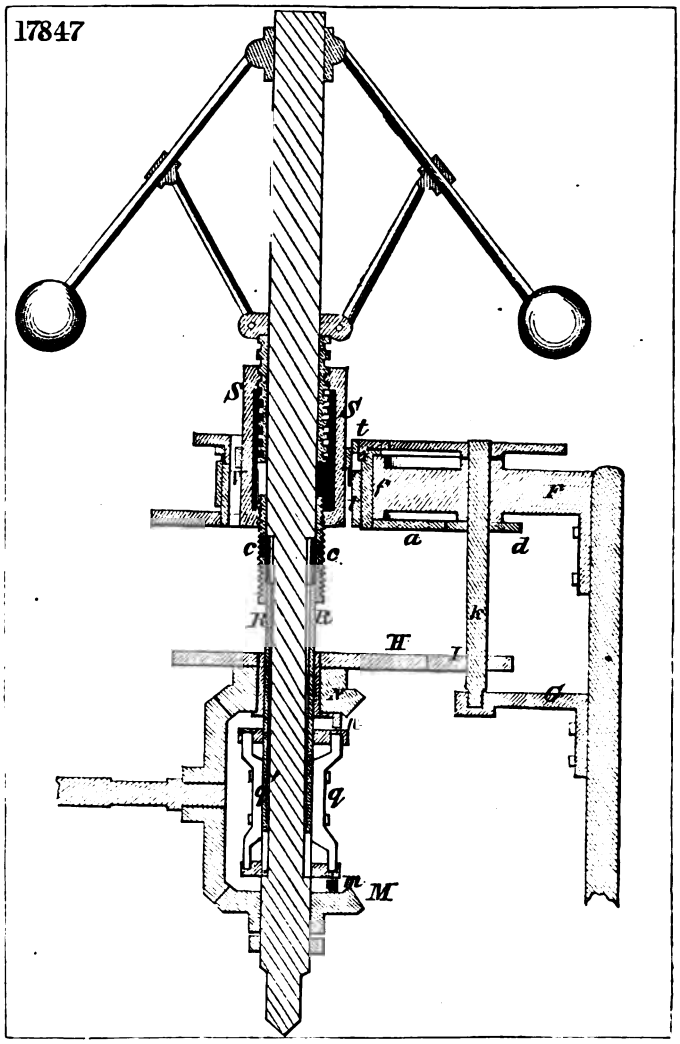

18304

fig. 1

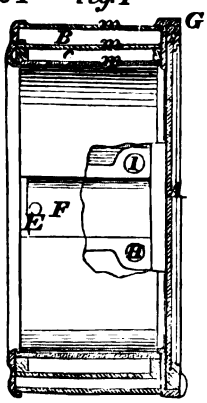

fig. 2

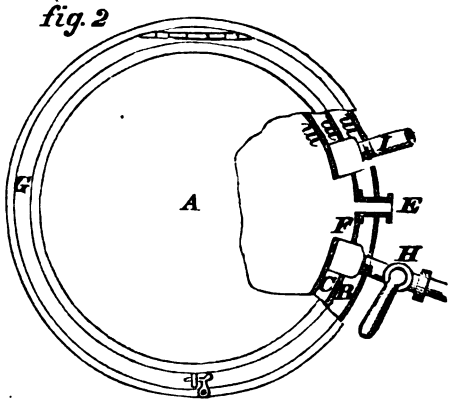

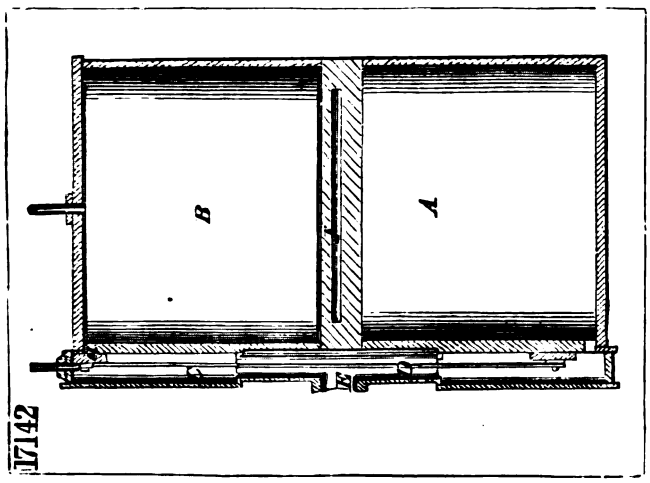
B
A
E
17142

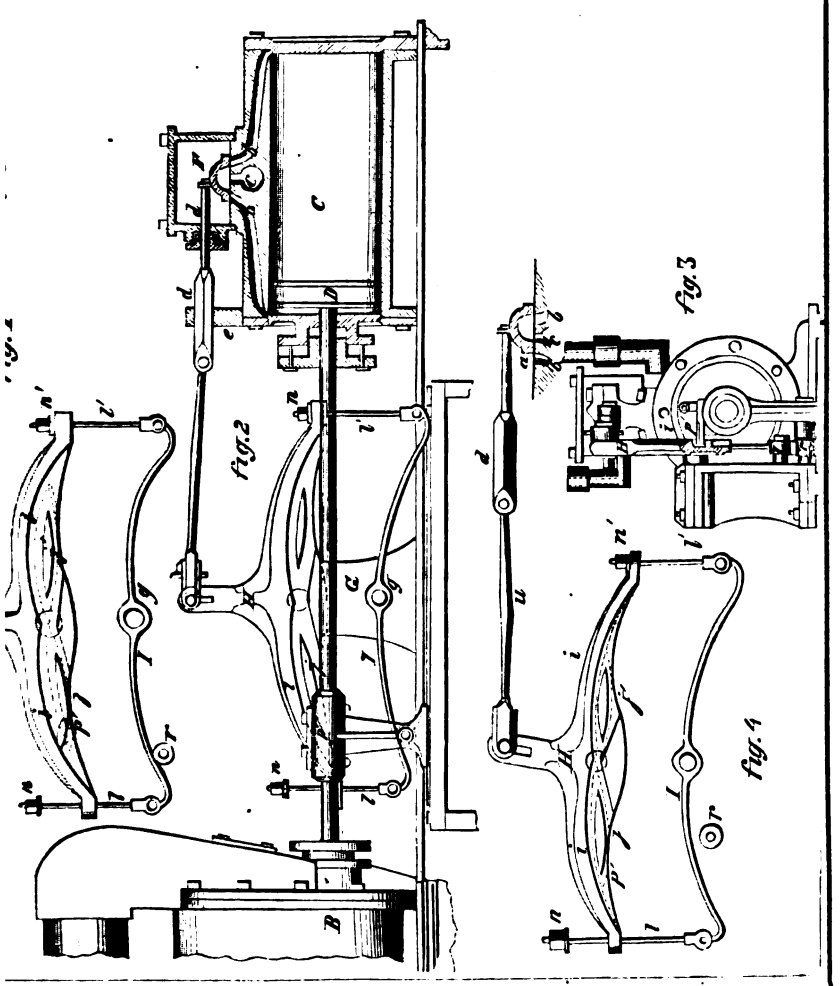
fig.2
fig.3
fig.4
B

18373

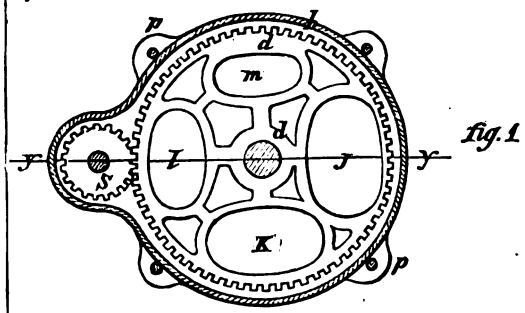

fig. 1

fig. 2

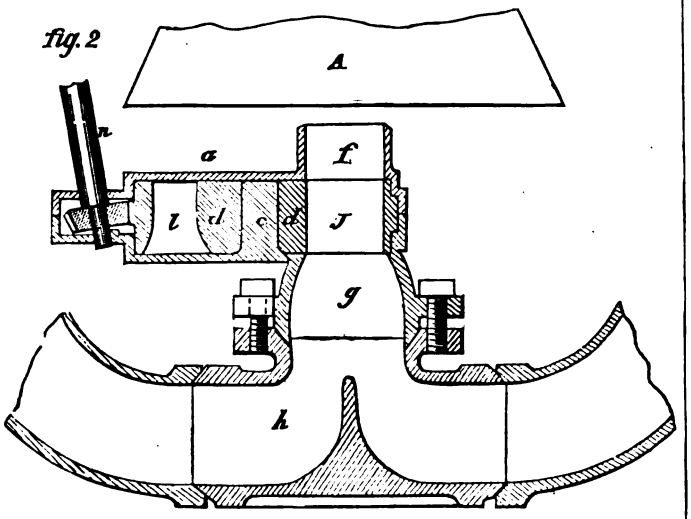

18953

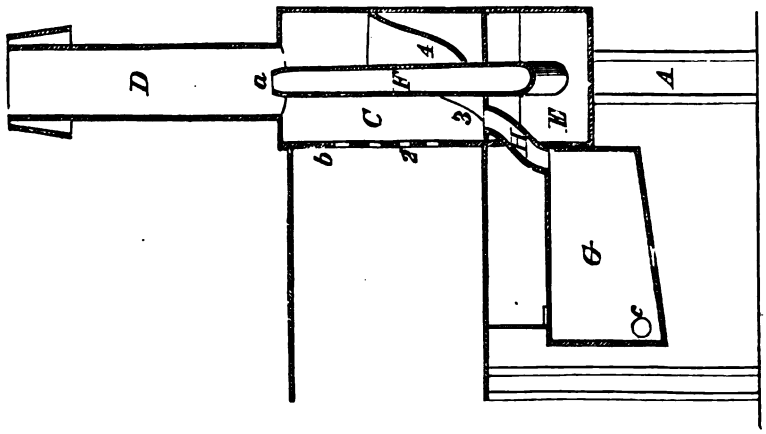

fig.1

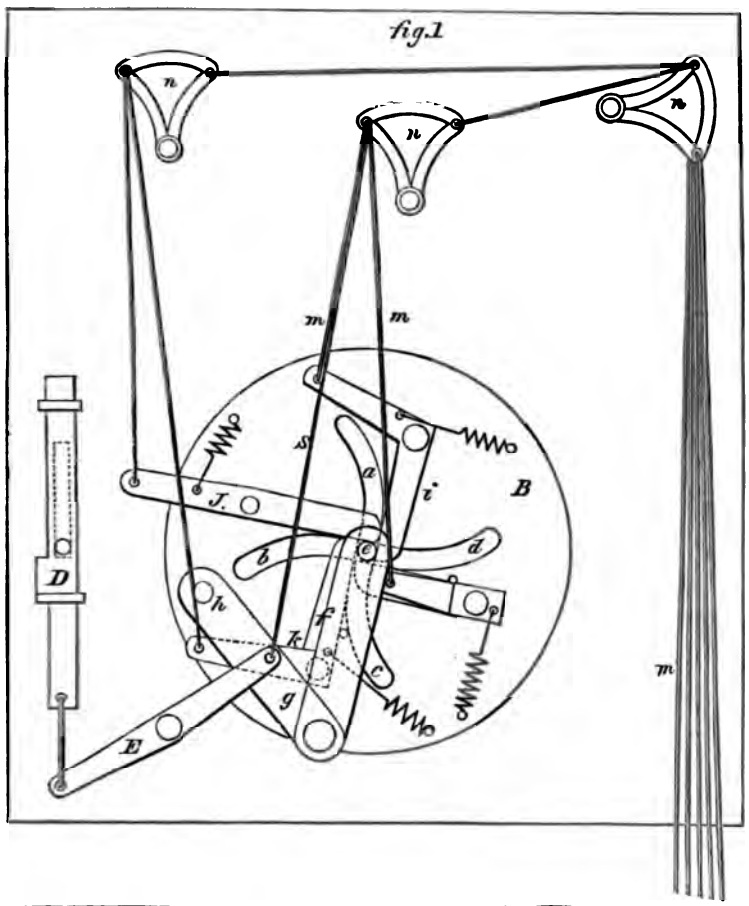

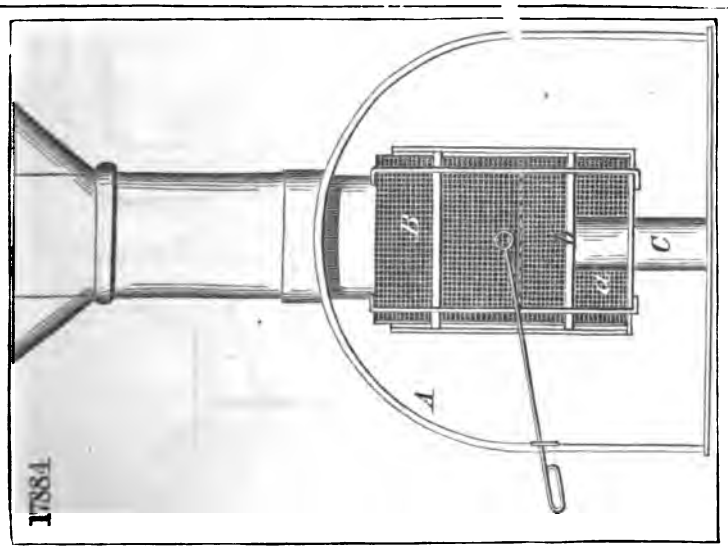

17384

ad 1864.

fig. 2

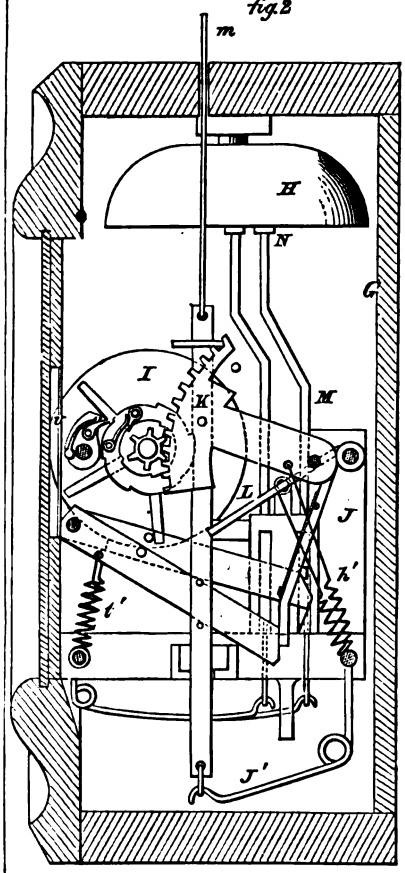

fig. 4

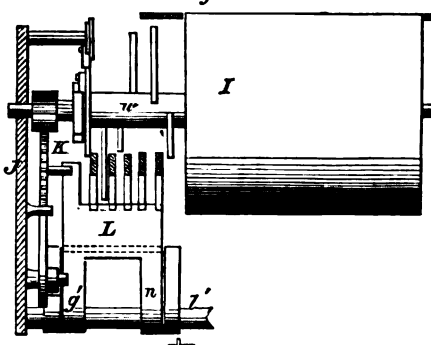

fig. 3

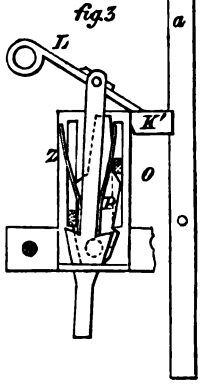

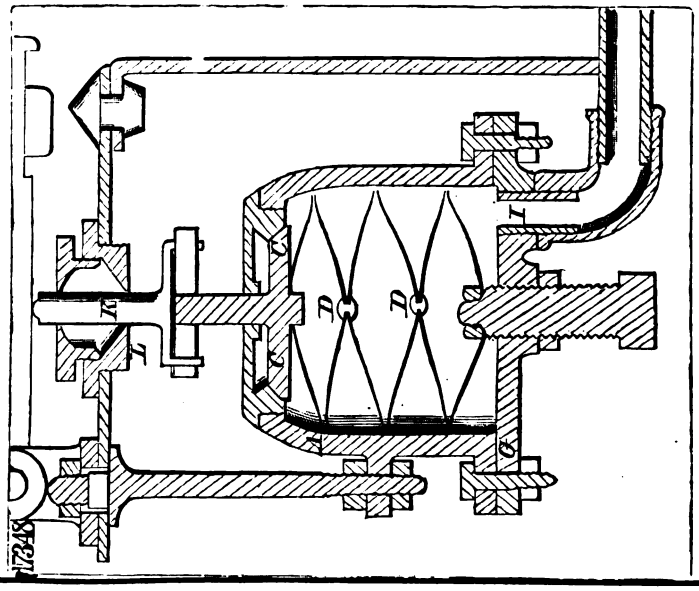

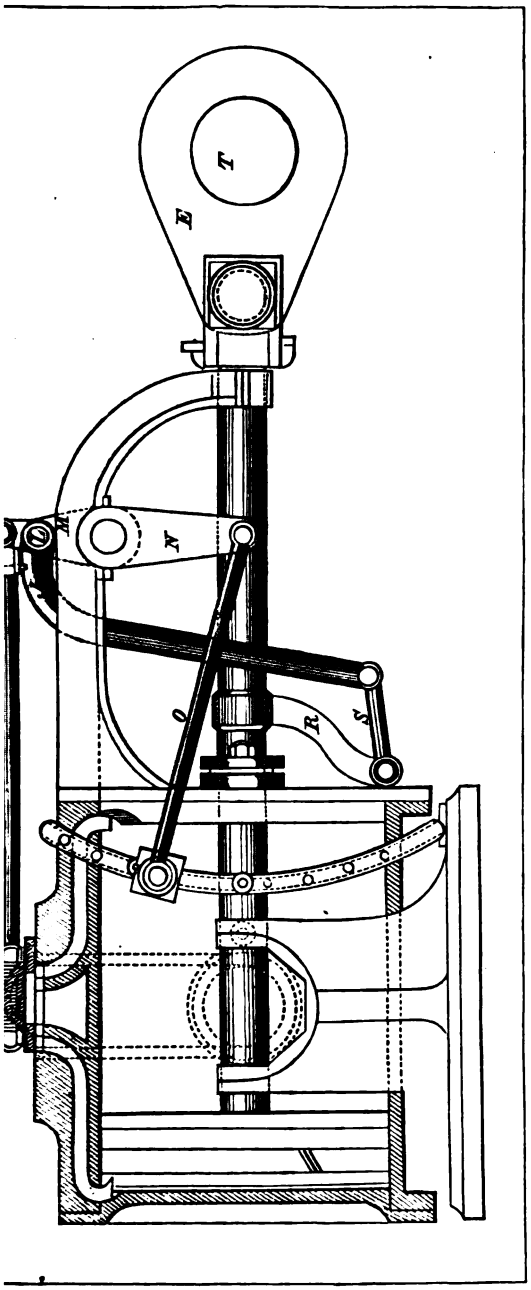
E
T
M
N
O
R
S

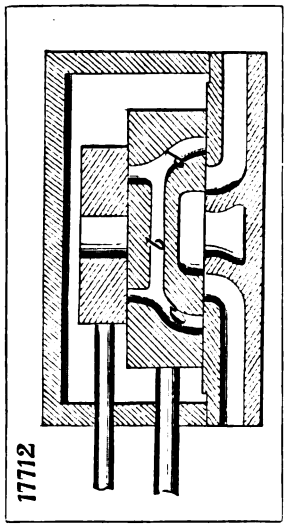
17712
b

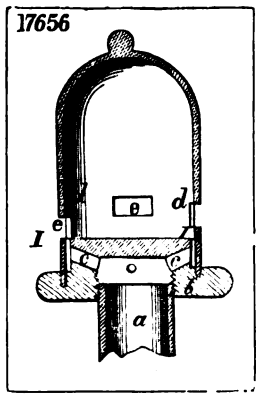
17656
d
e
I
a

18837

fig.1

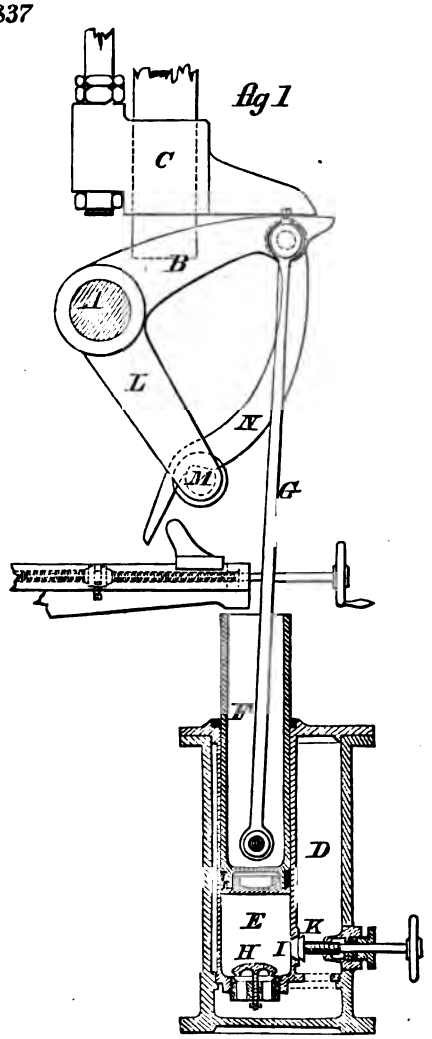

ad18837

fig.2

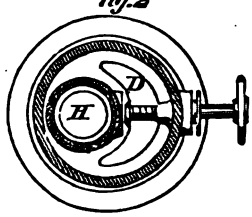

16351

fig.1

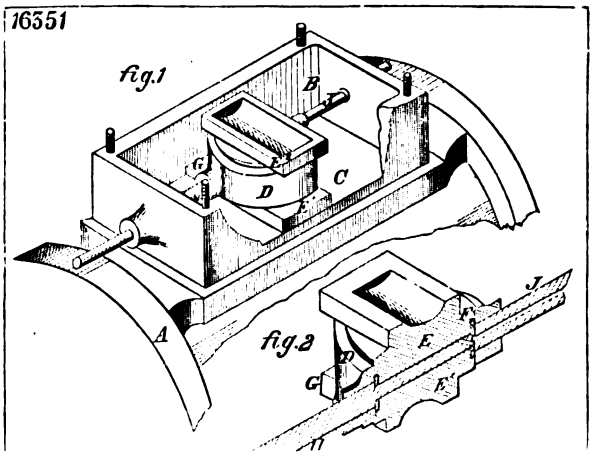

fig.2

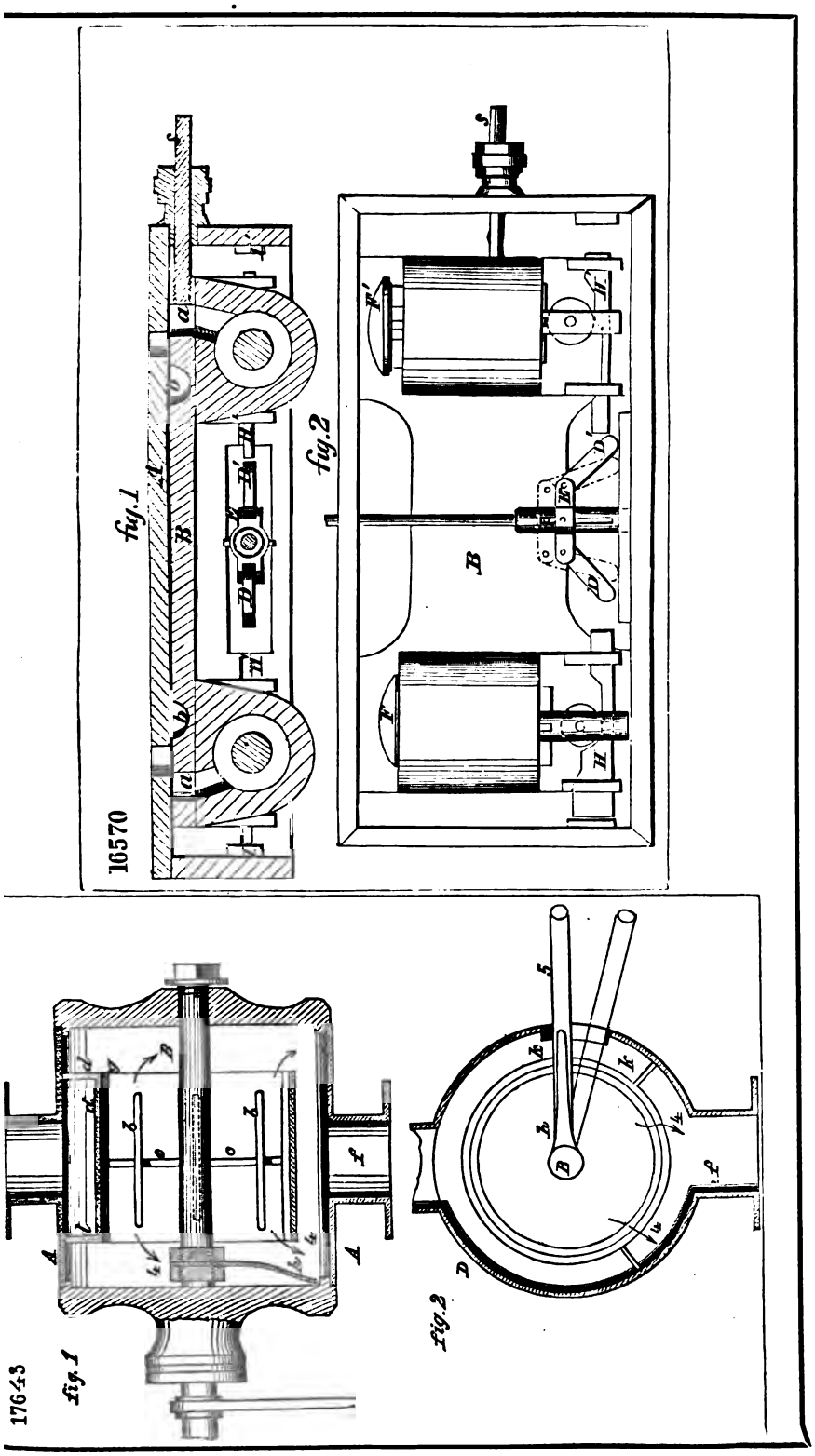
16570
Fig. 1
Fig. 2
17643
Fig. 1
Fig. 2

16765

fig. 1

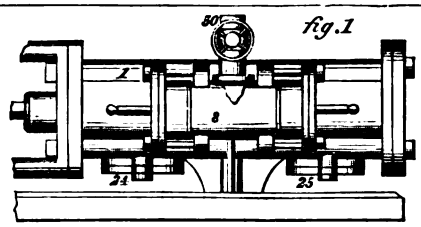

fig. 2

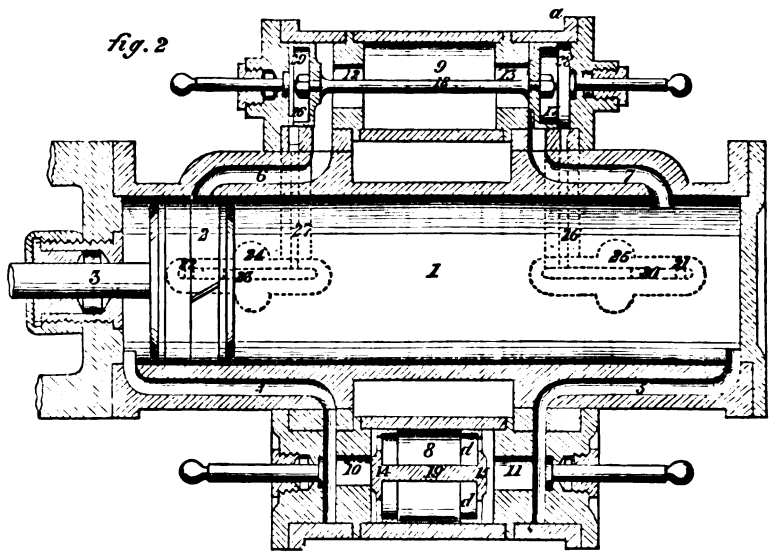

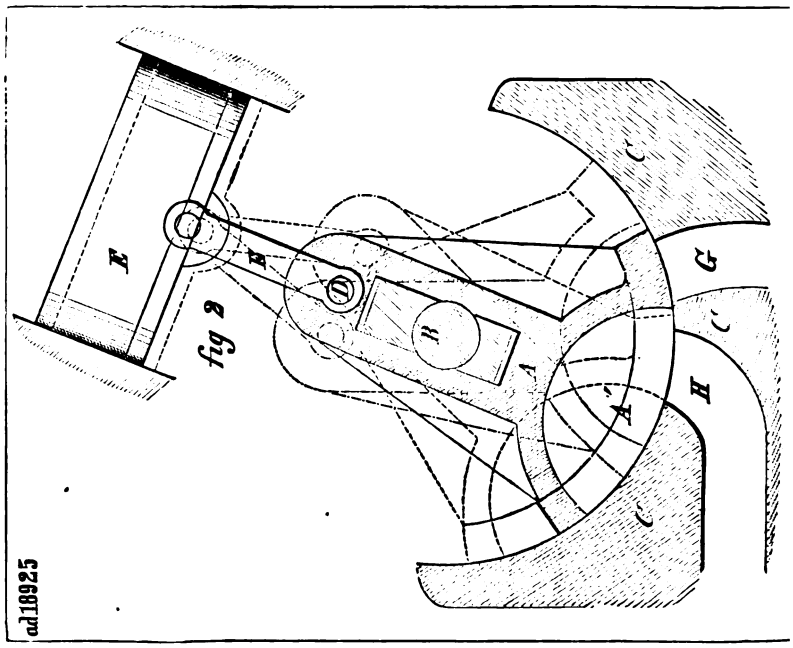

fig 2

ad18925

18311

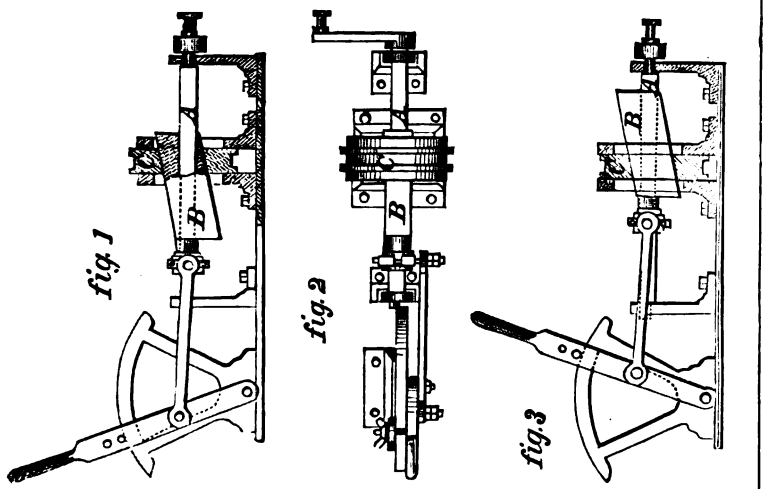

18925

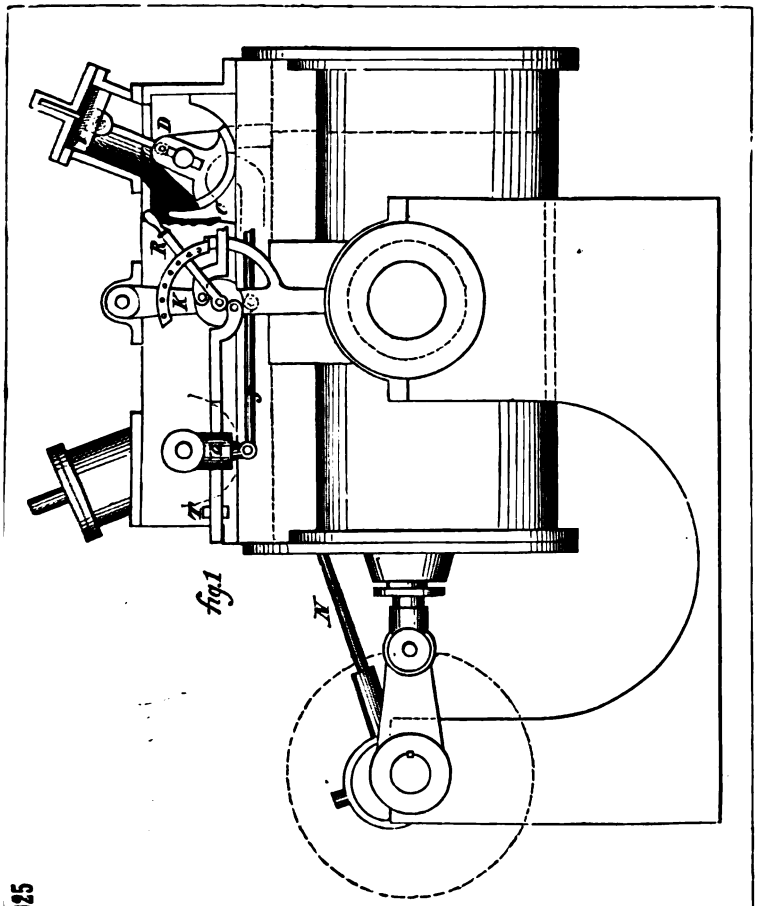

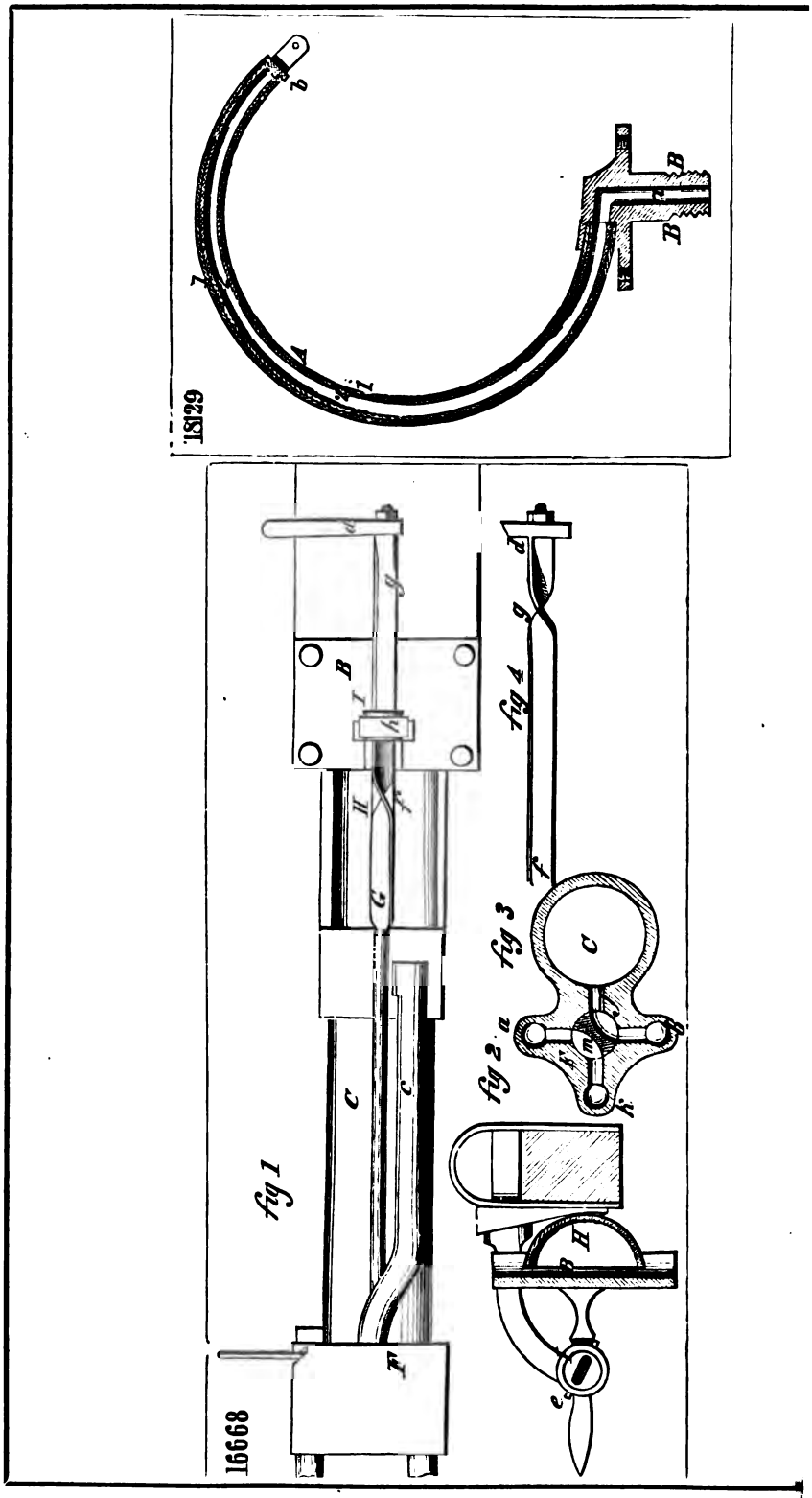
18129
16668
fig 1
fig 2 a
fig 3
fig 4

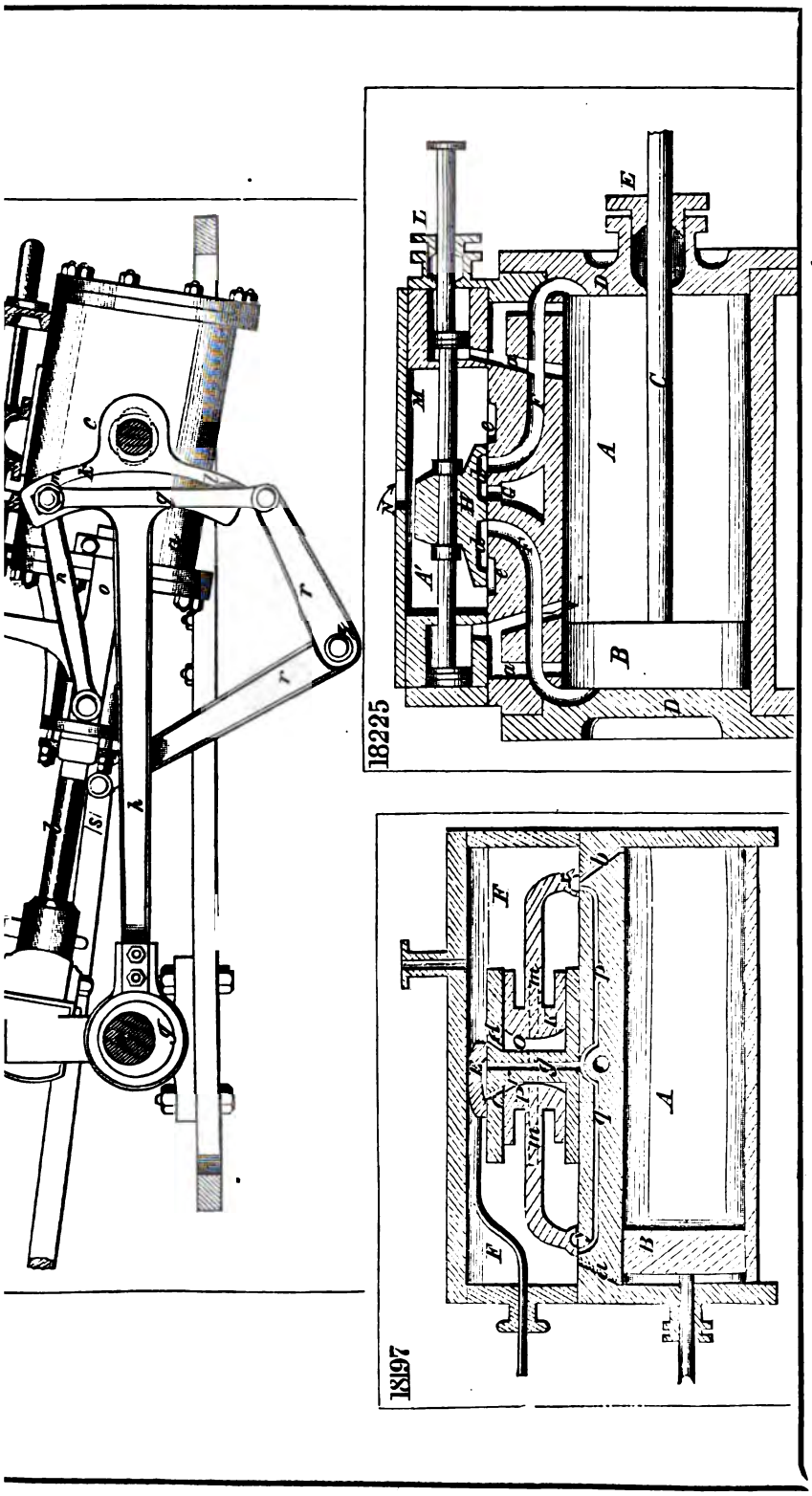
18225
18197

16358

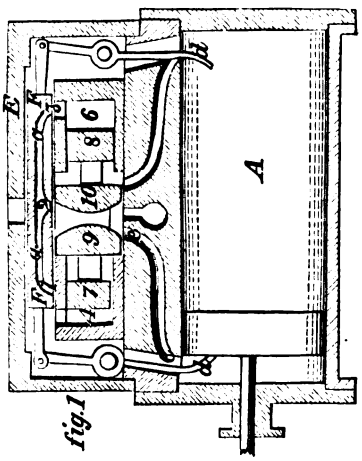

fig. 1

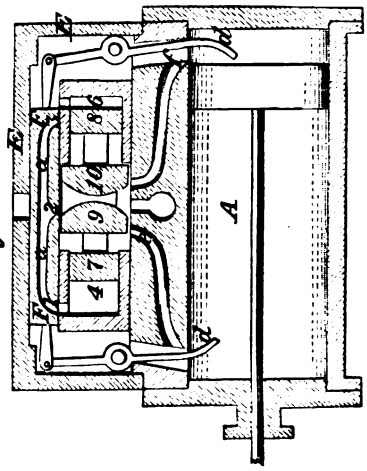

fig. 2

16515

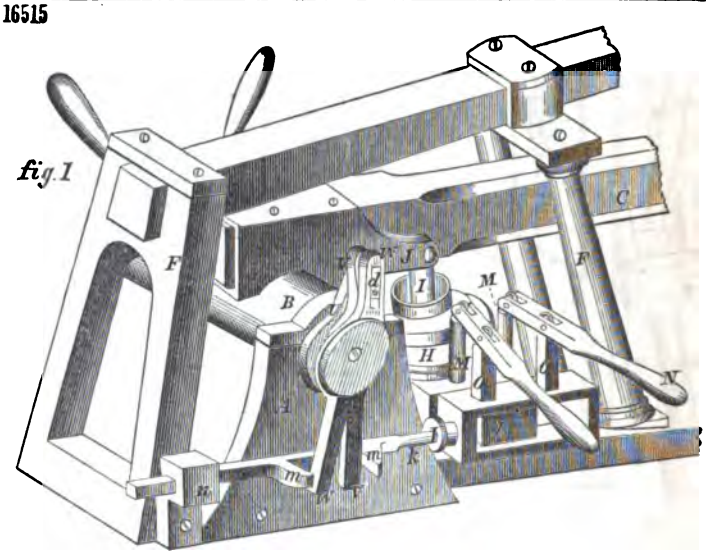

fig. 1

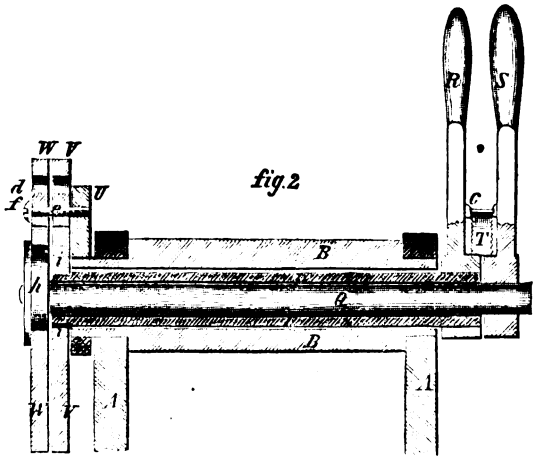

fig. 2

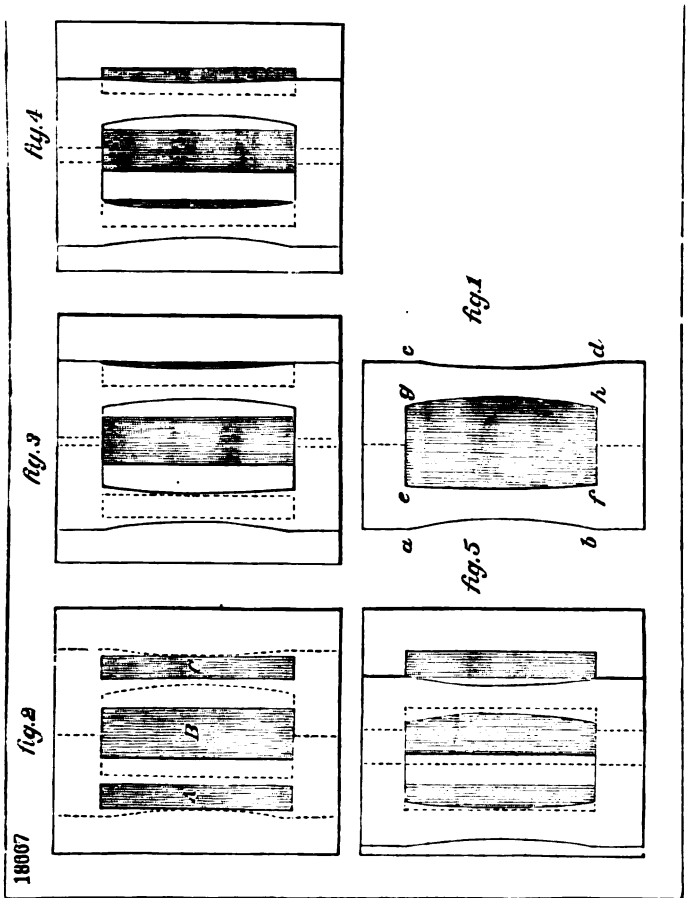
fig.4
fig.3
fig.2
fig.1
fig.5
c
d
g
h
e
f
a
b
B
A
18667

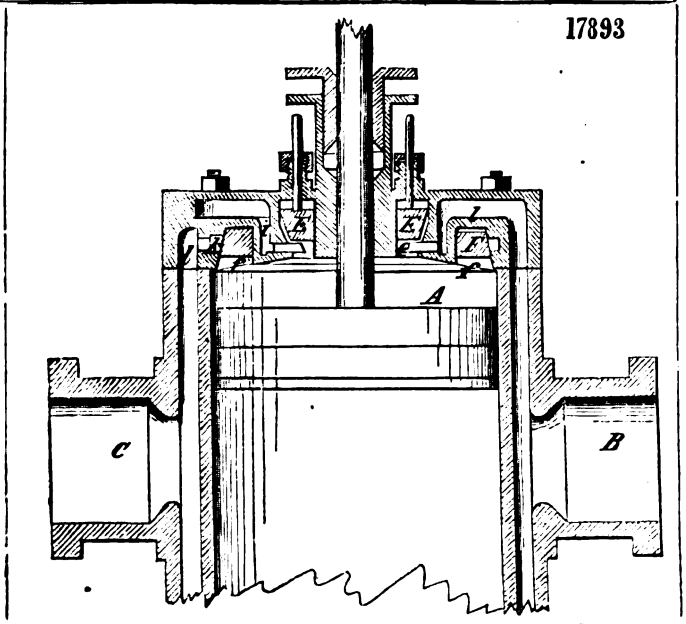
17893
A
B
C

16656

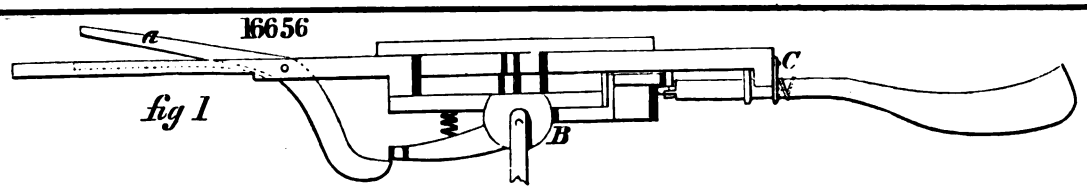

fig 1

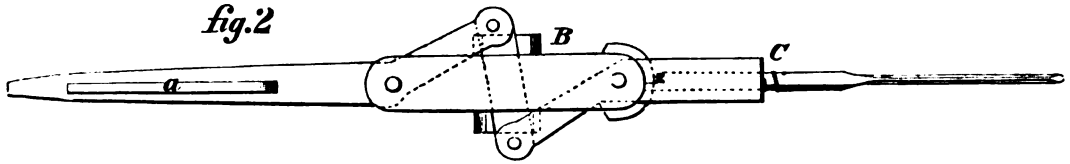

fig.2

17192

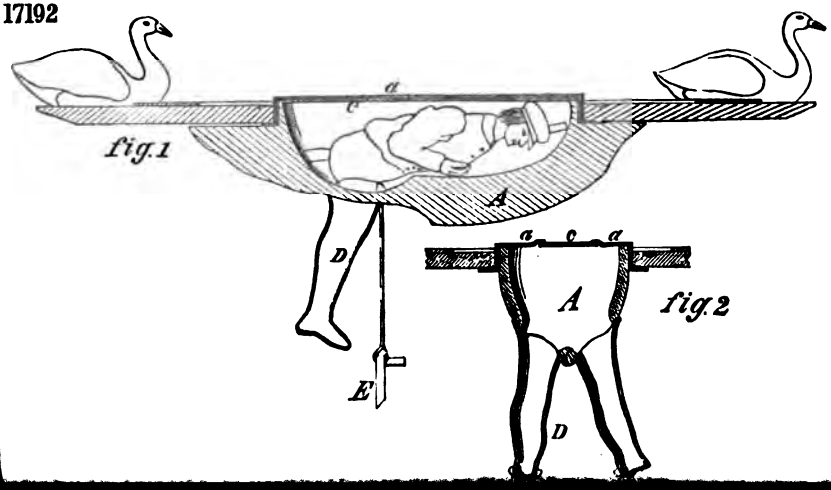

fig.1

fig.2

18107

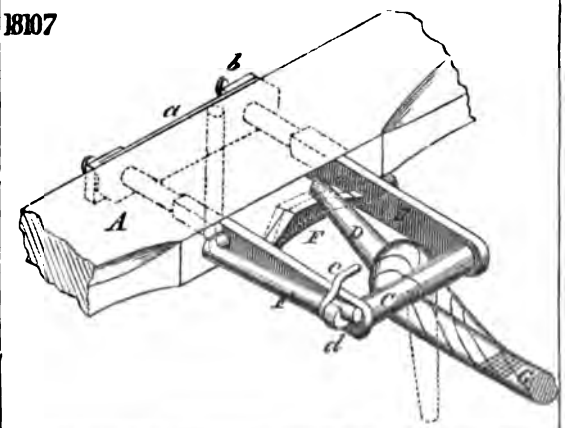

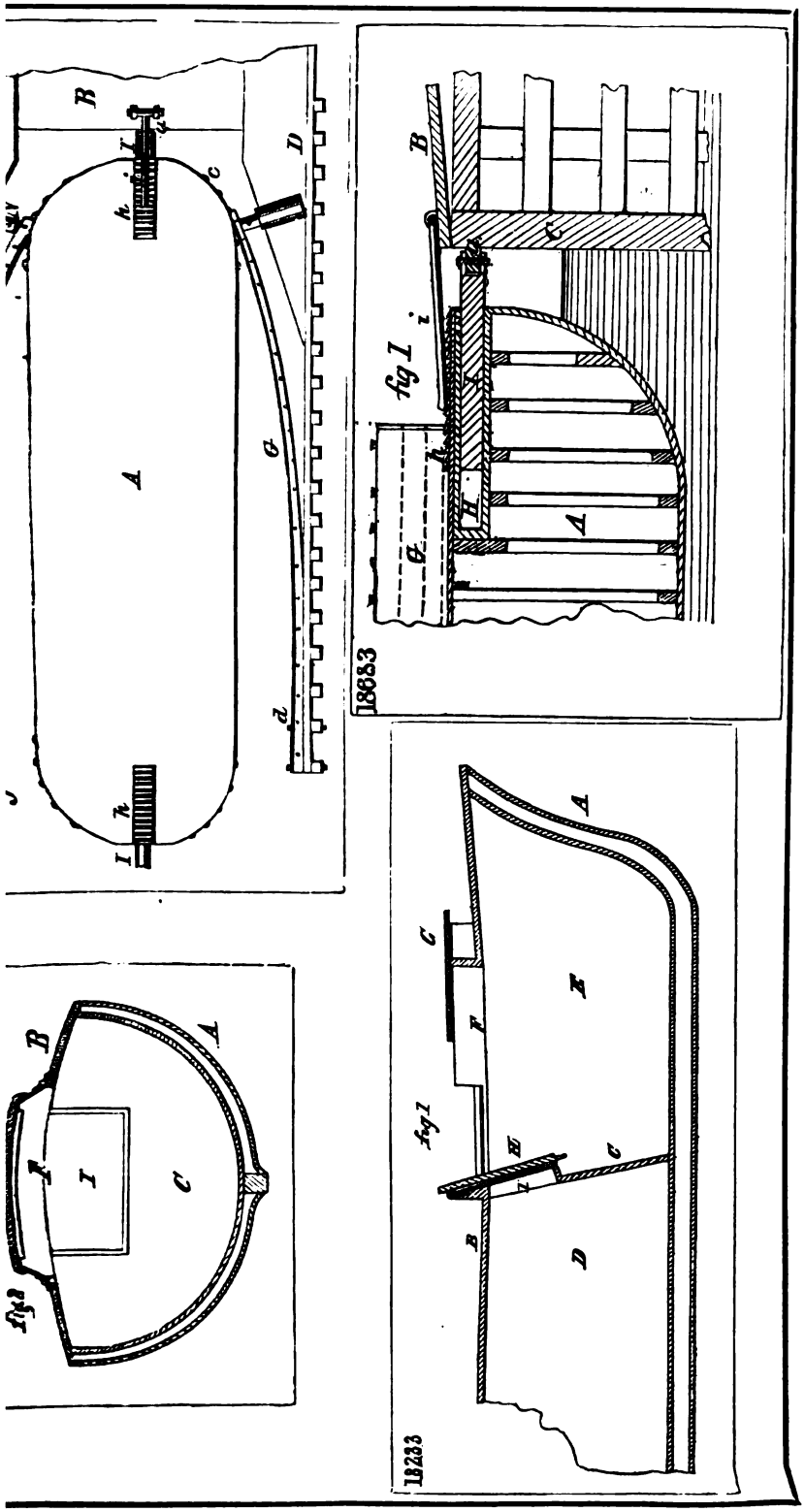
fig 1
18683
fig 1
18233
fig 2

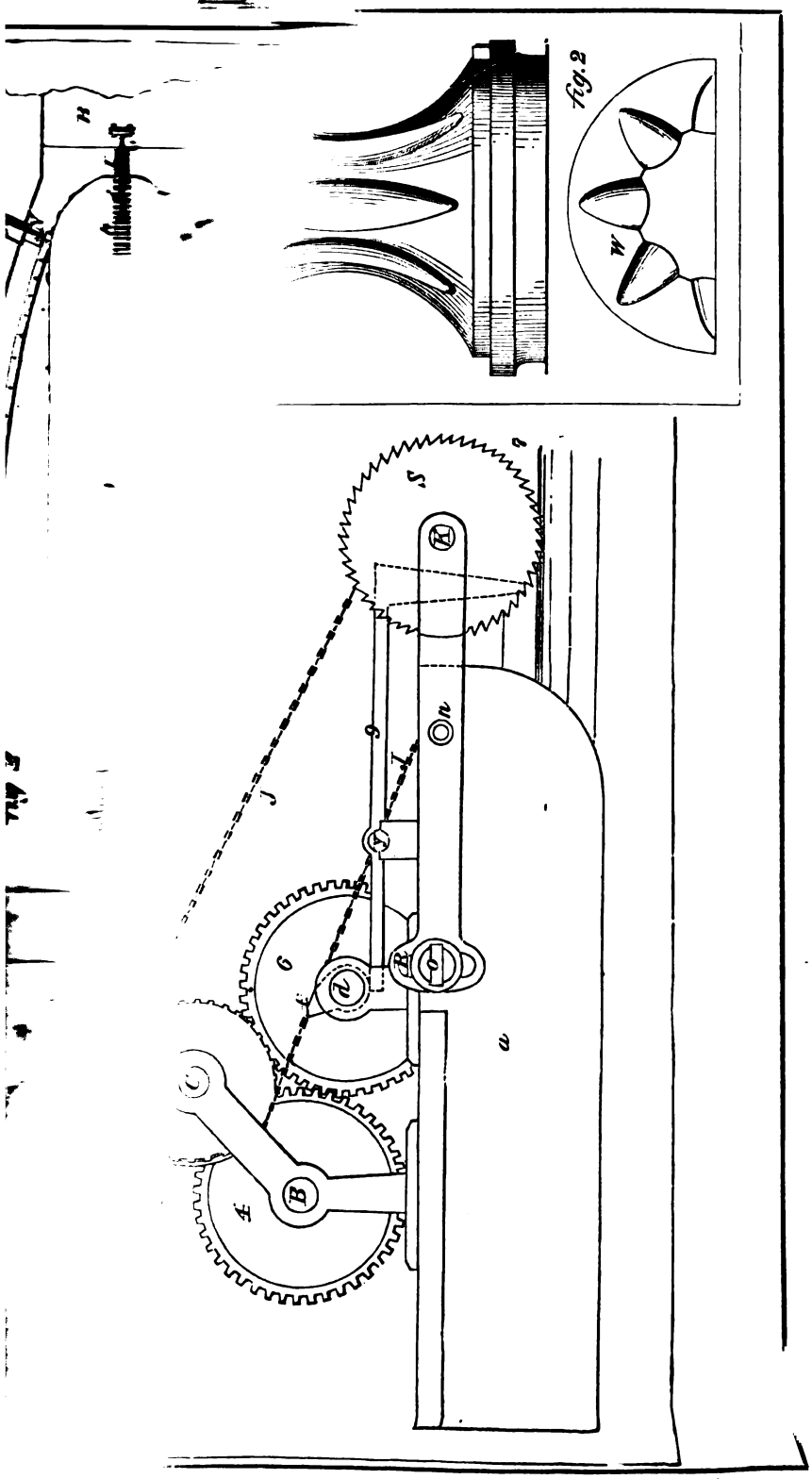
fig. 2

18044

fig.1

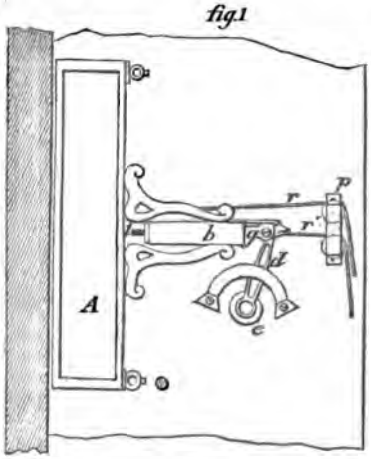

fig.2

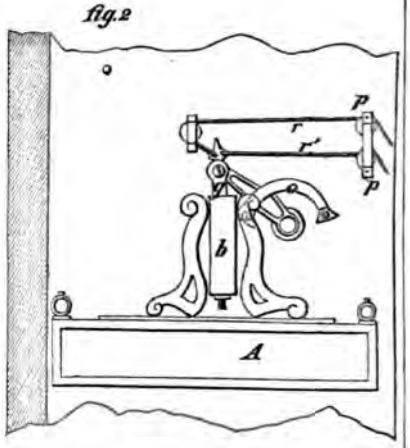

fig.3

fig.4

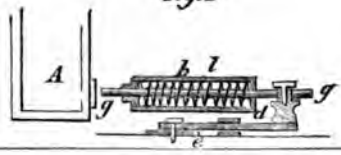

17715

fig.1

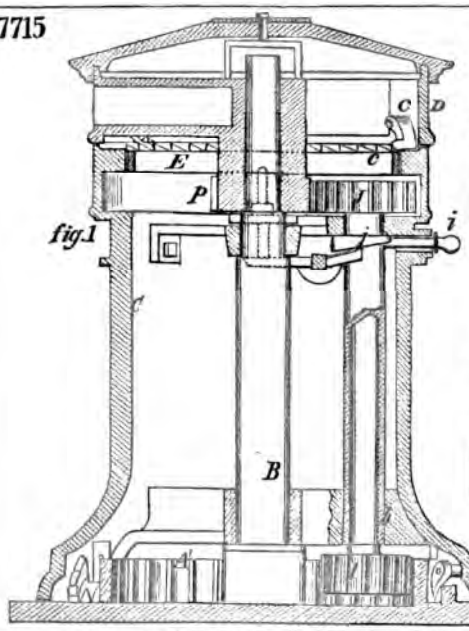

fig.2

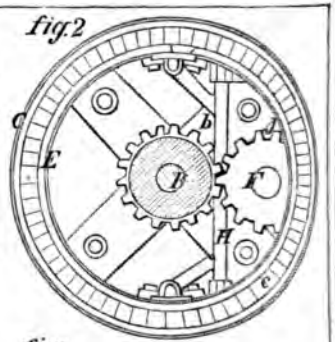

fig.3

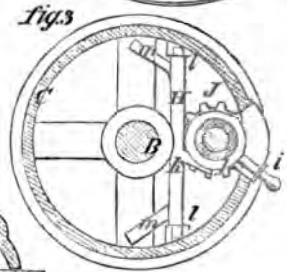

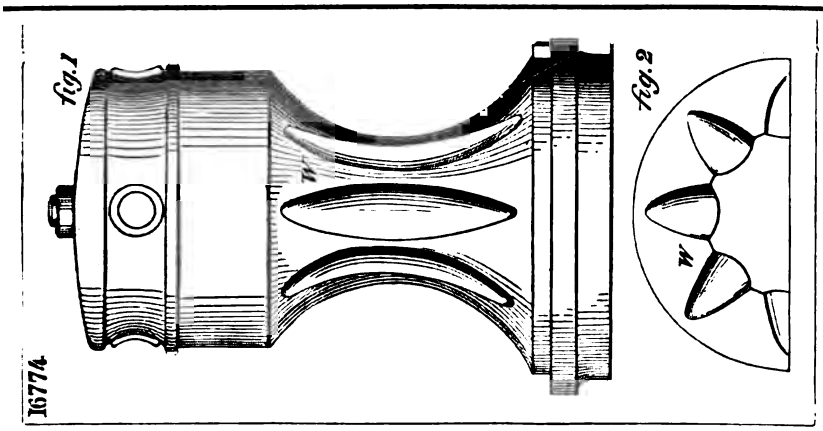
fig.1
fig.2
W
W
16774

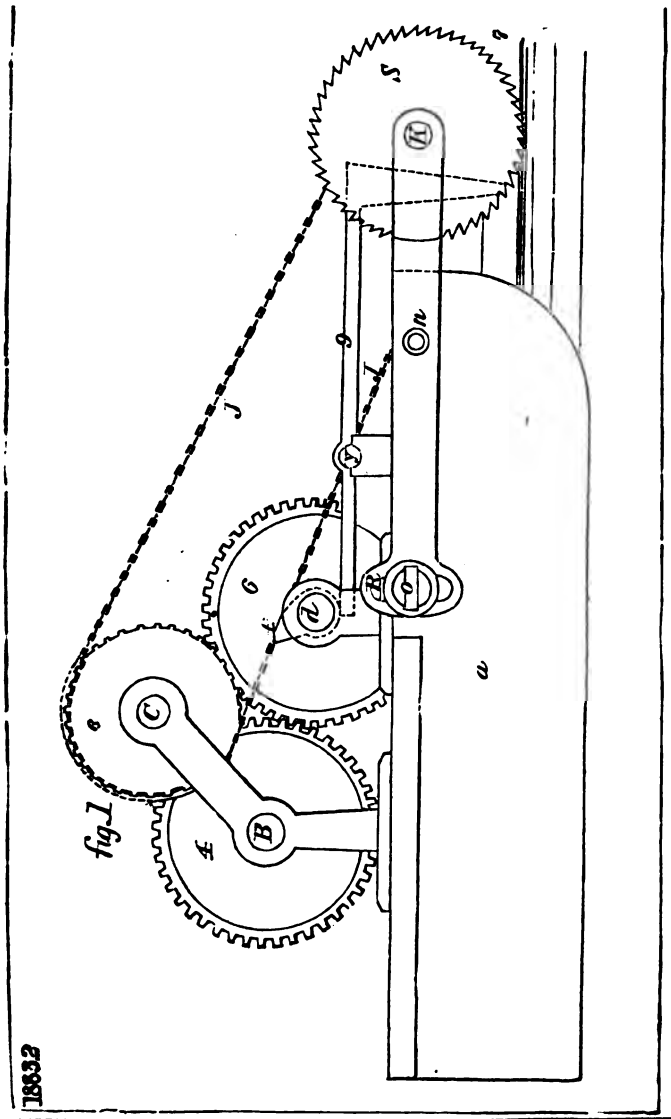
fig.1
18832

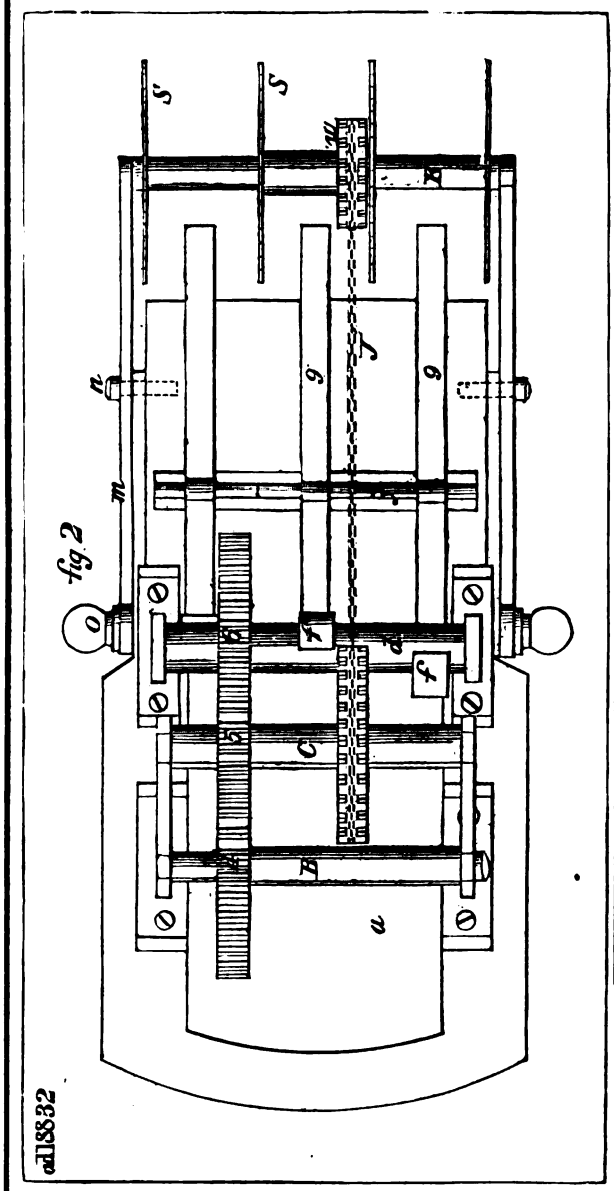
fig. 2
a18832

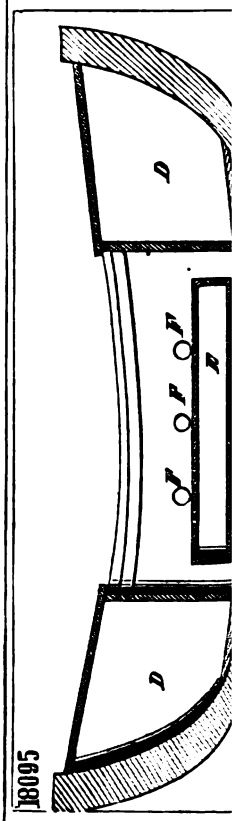
18095

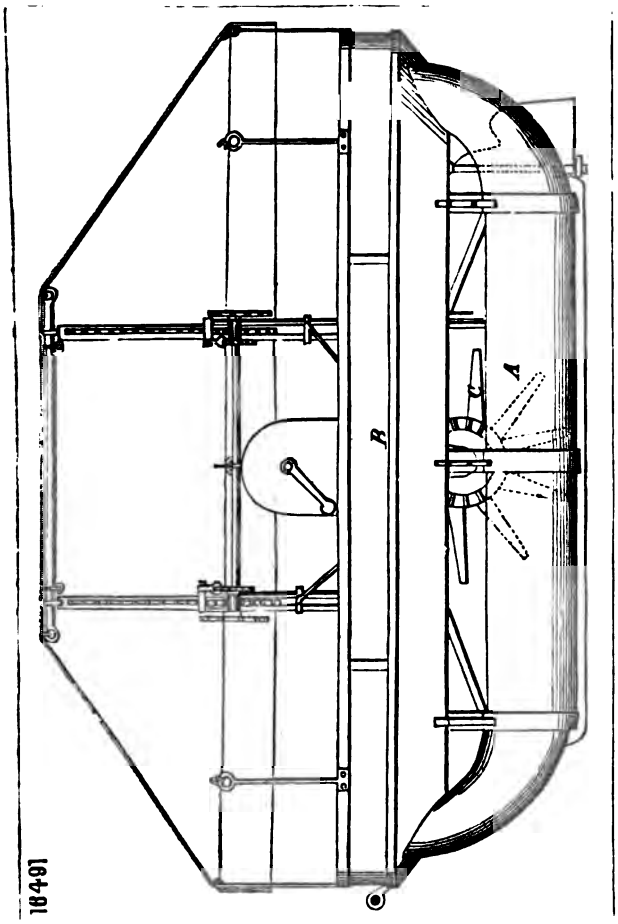
A
B
18491

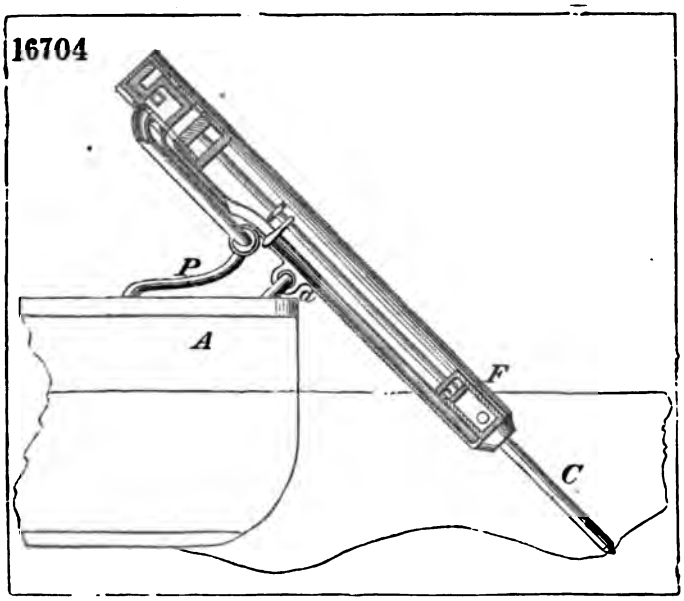
16704
P
A
F
C

17971

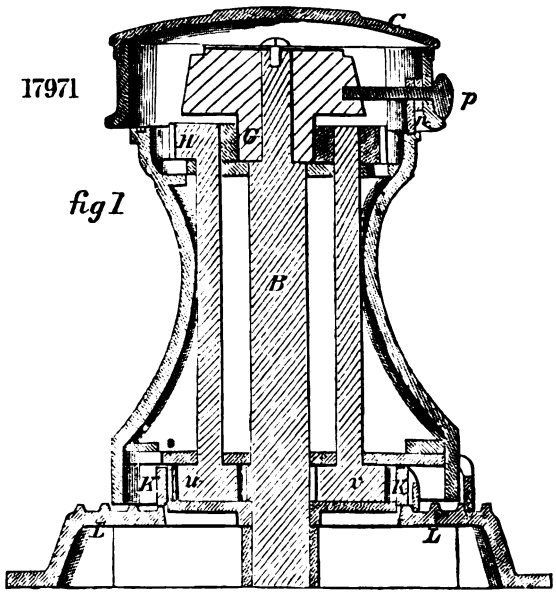

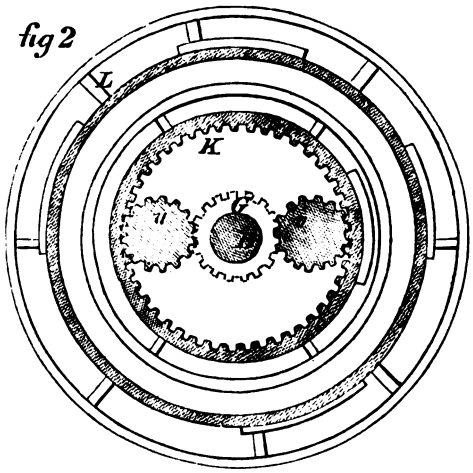

18090

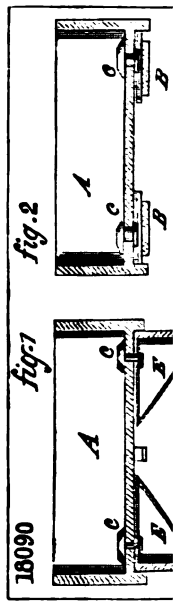

16555

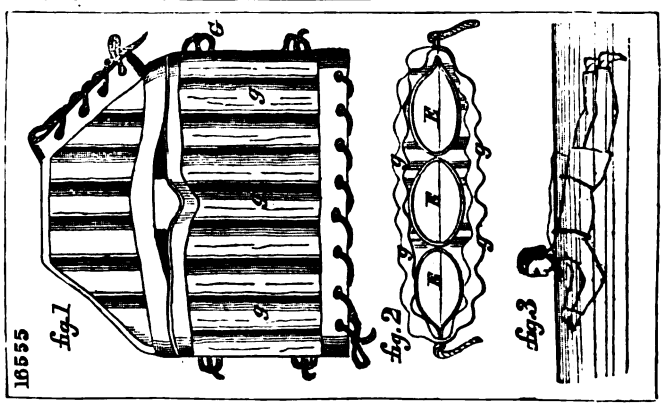

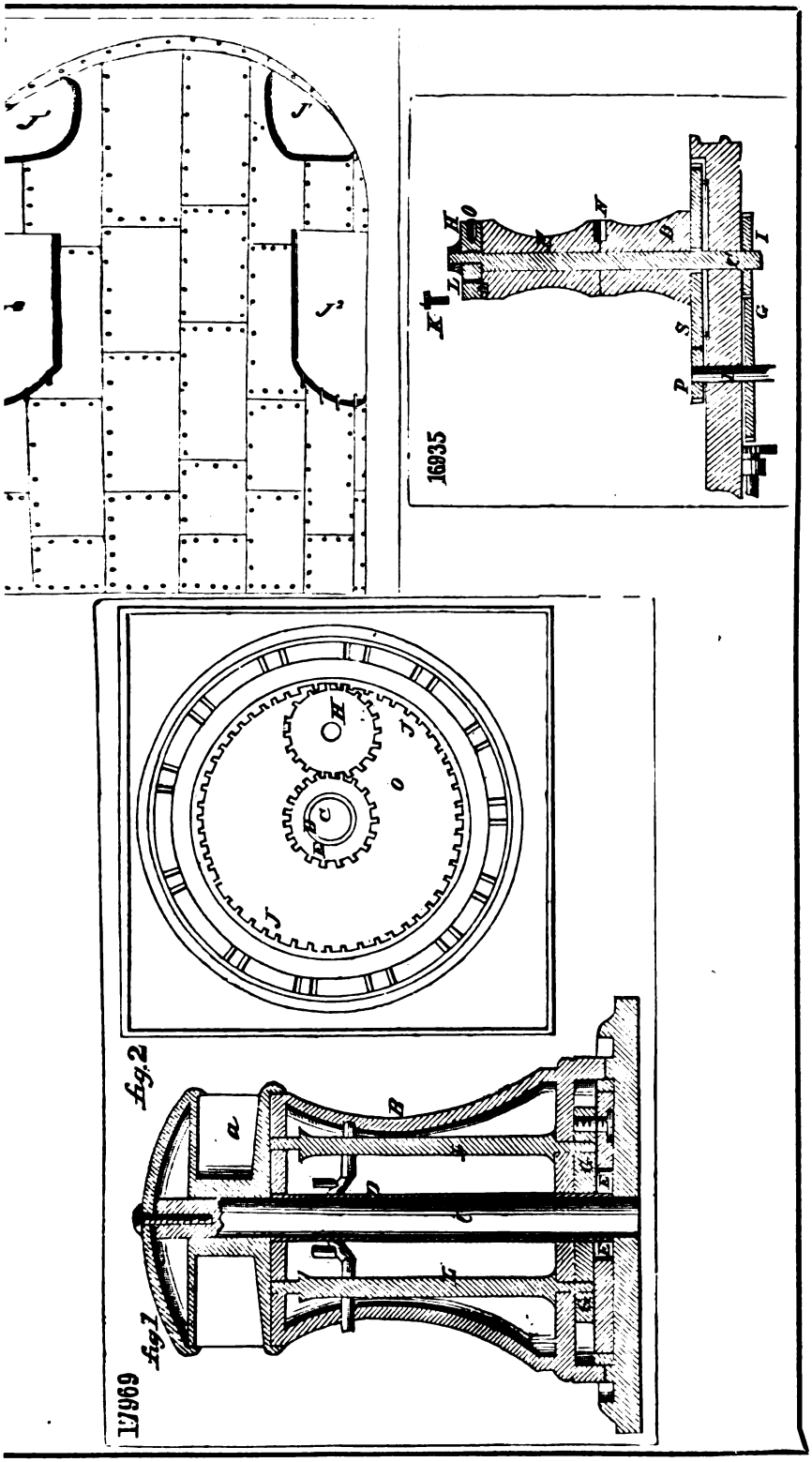
16935
Fig.2
Fig.1
17969

18053

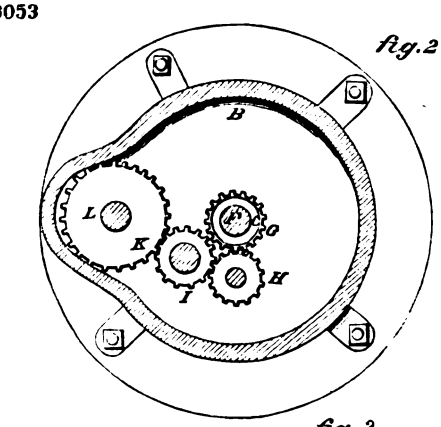

fig. 2

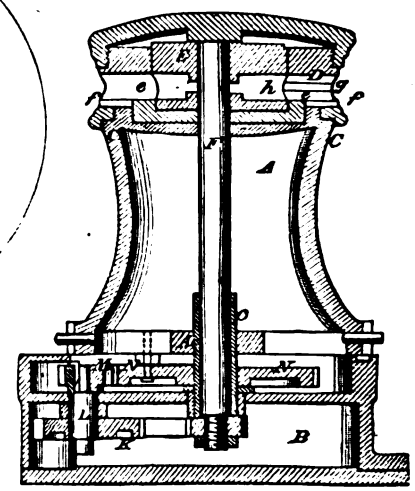

fig. 1

fig. 3

18260

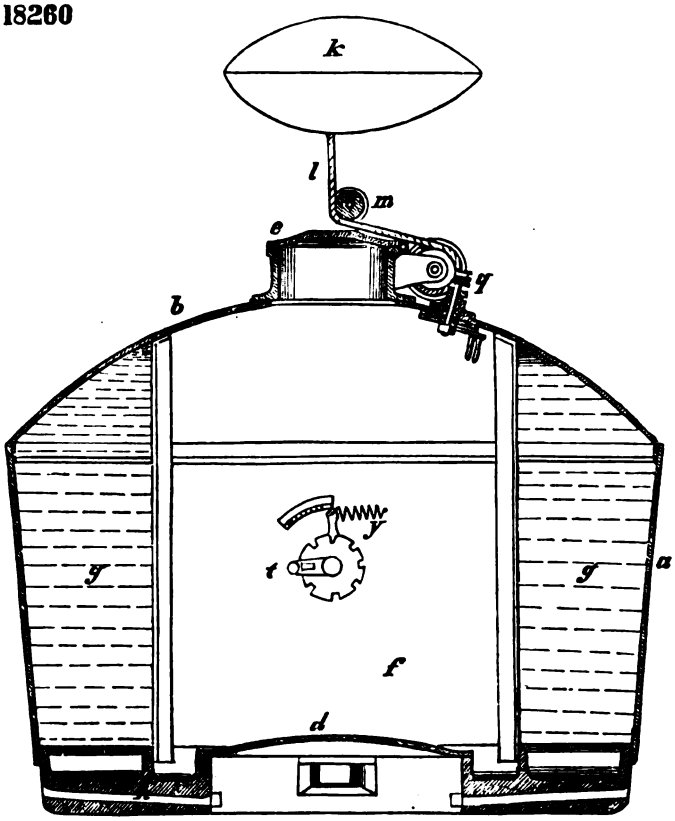

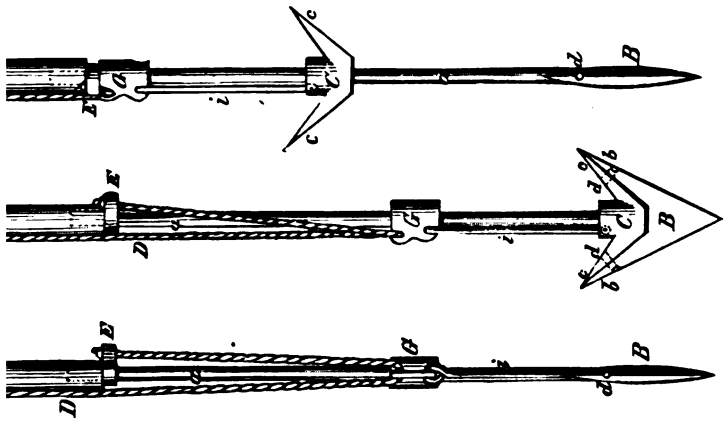

4

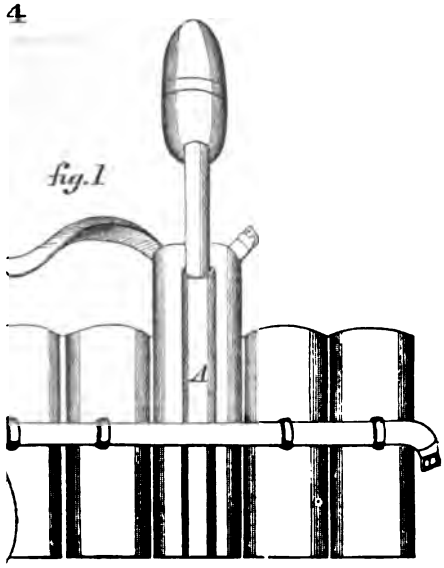

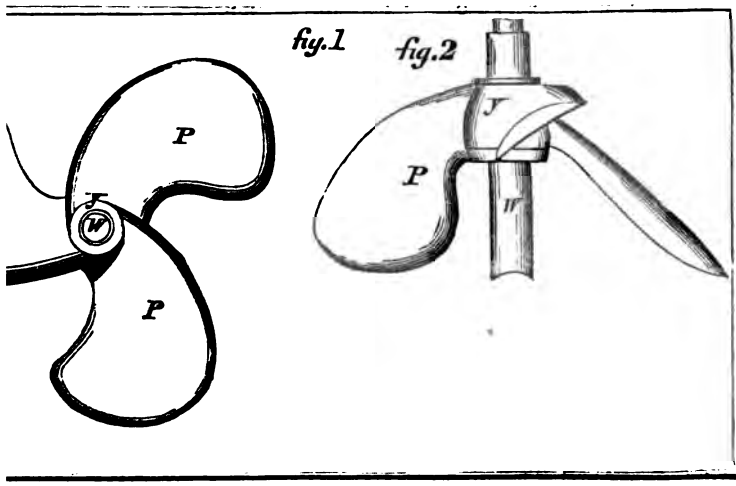

16656

fig 1

fig.2

18107

17792

fig.1

fig.2

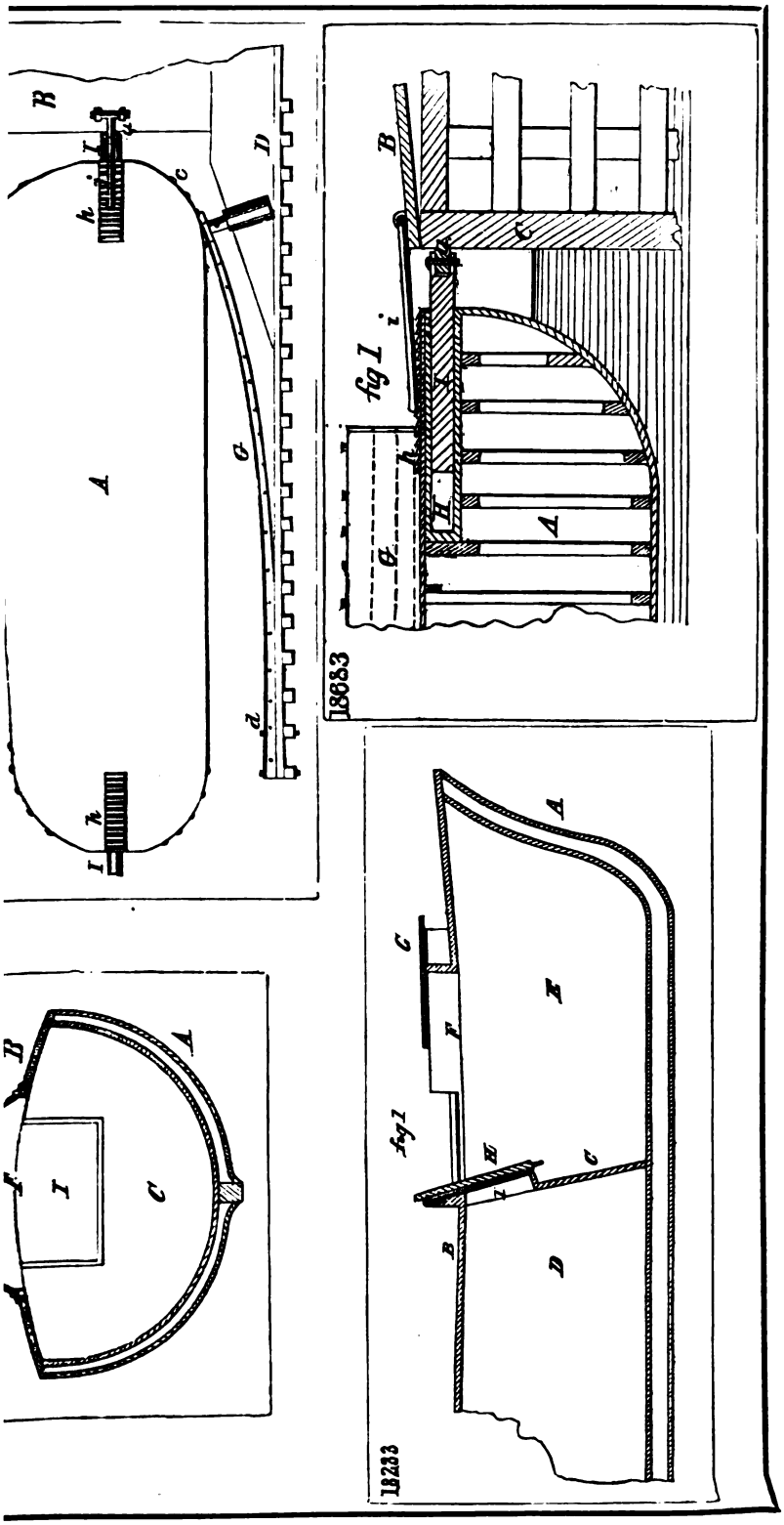
fig 1
18683
fig 1
18233

18044

fig.1

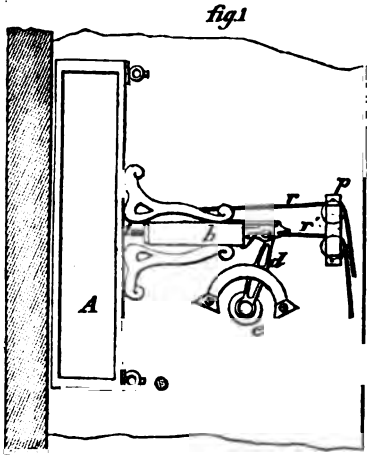

fig.2

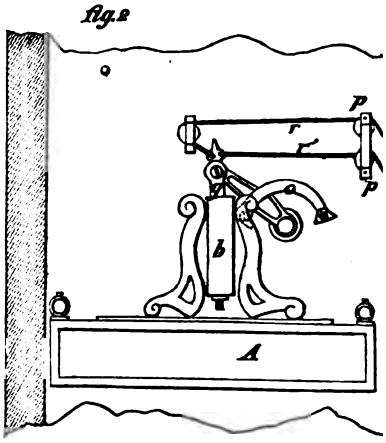

fig.3

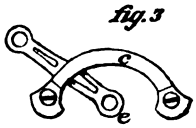

fig.4

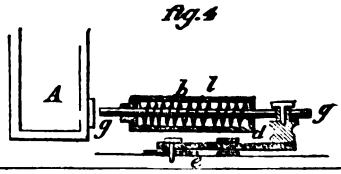

17715

fig.1

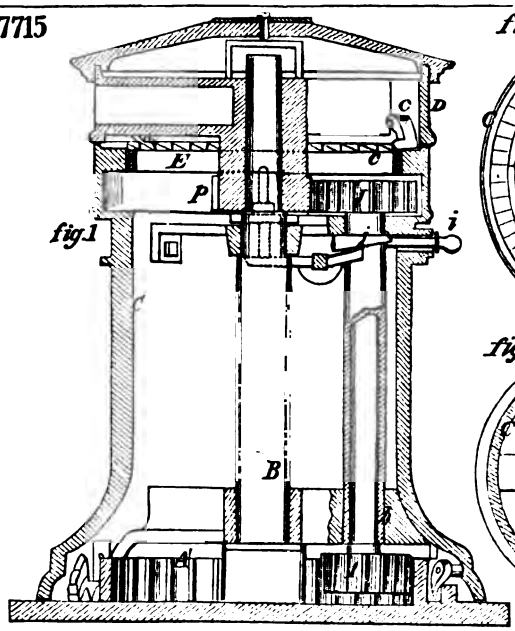

fig.2

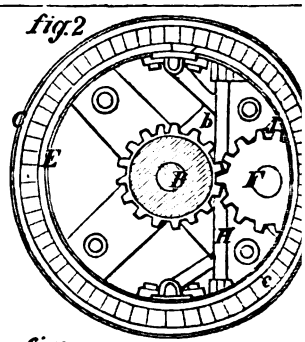

fig.3

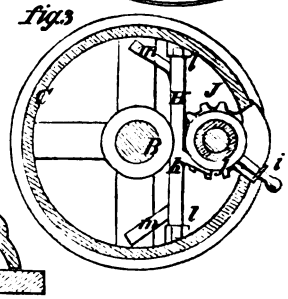

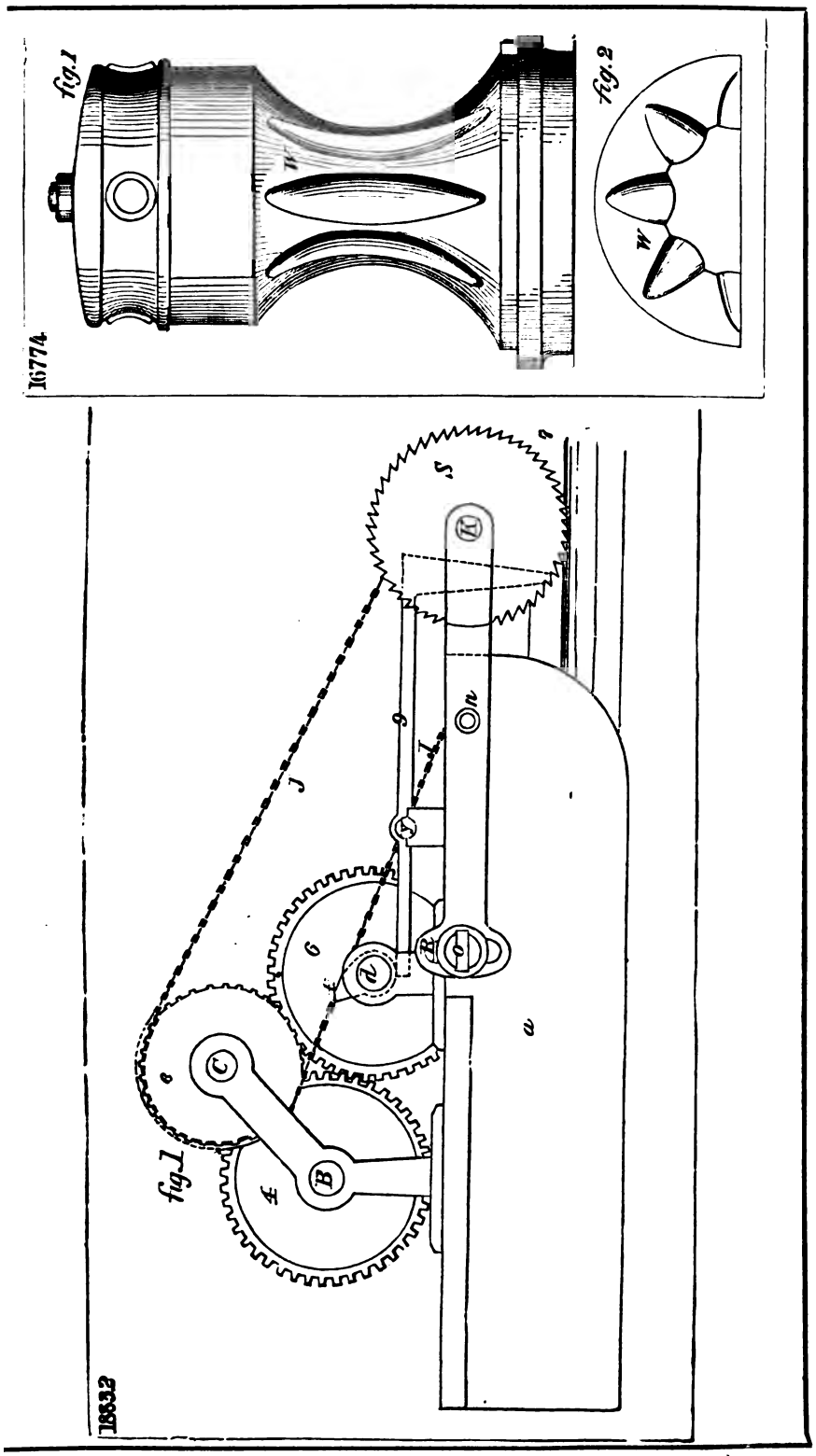
fig.1
fig.2
16774
fig.1
18832

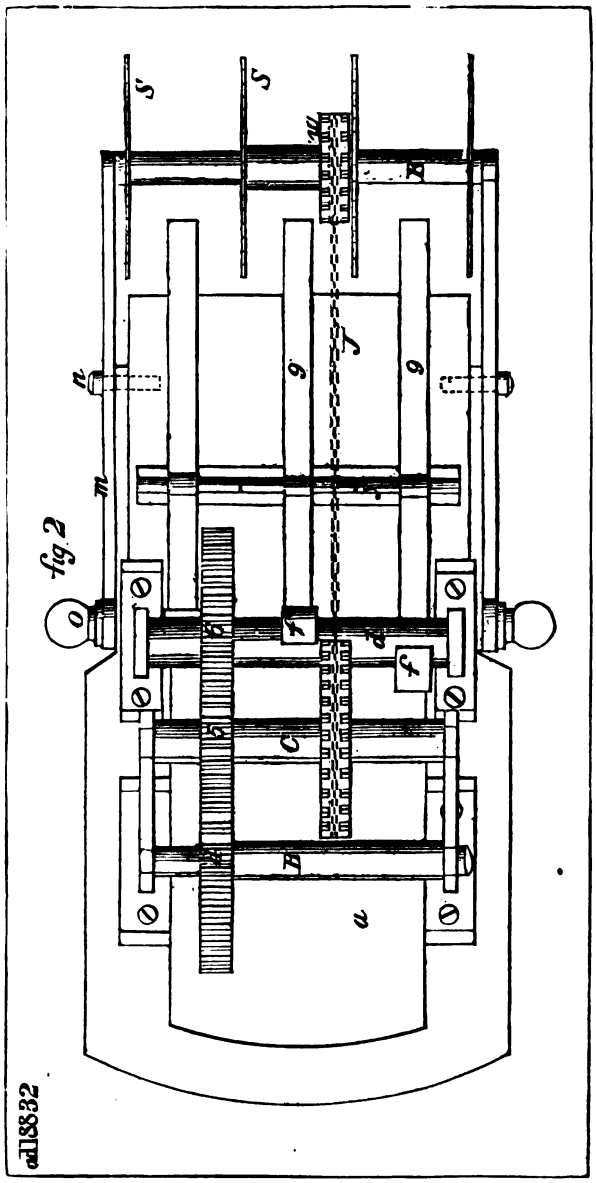
fig. 2
a118832

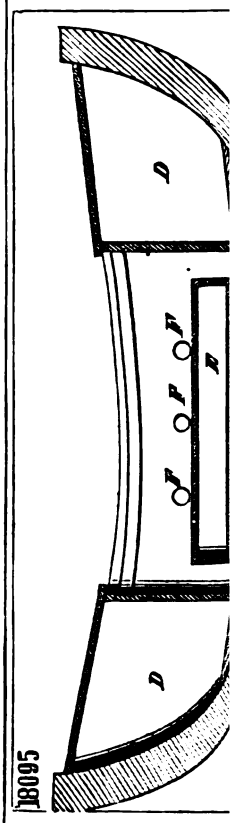
18095

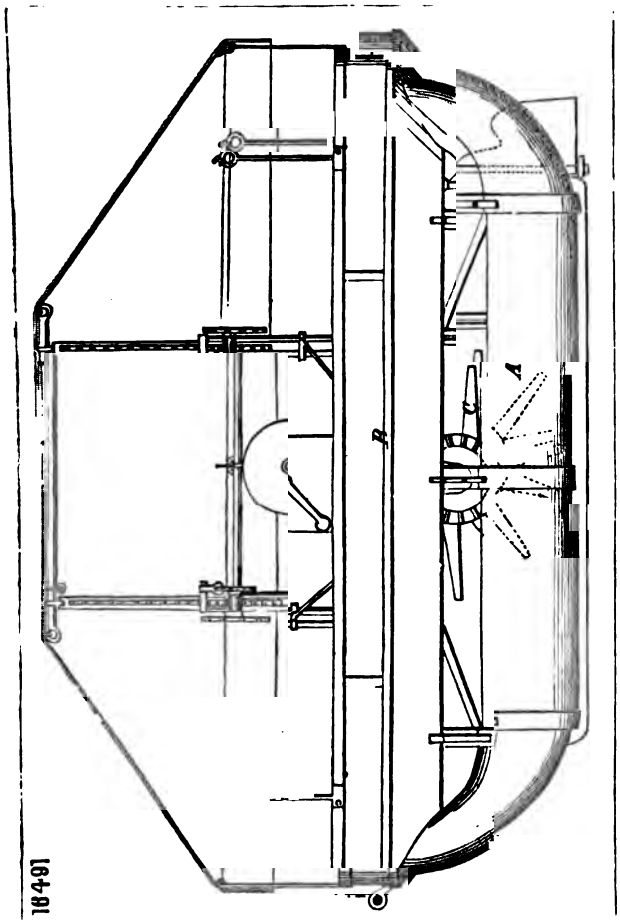

16704

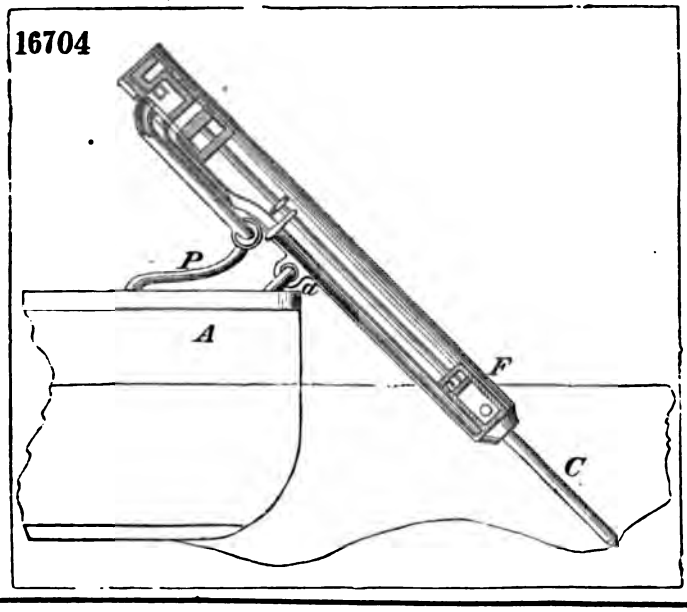

17971

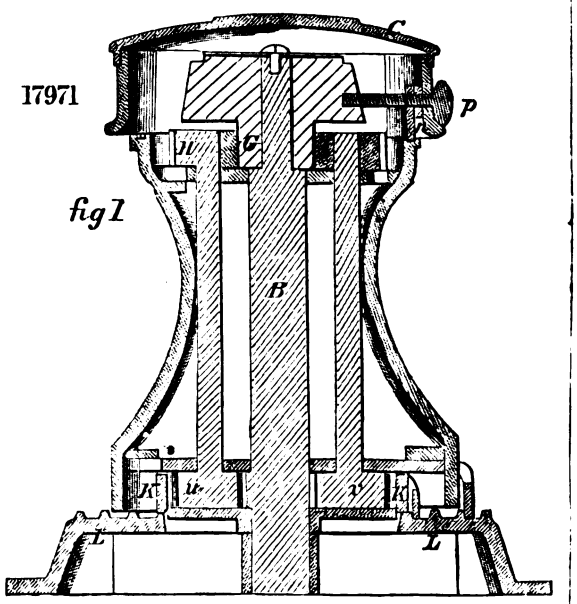

fig 1

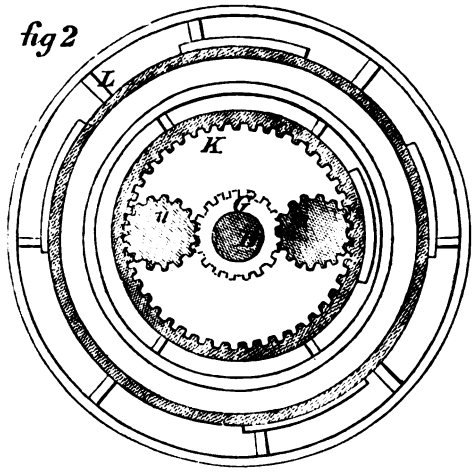

fig 2

18090

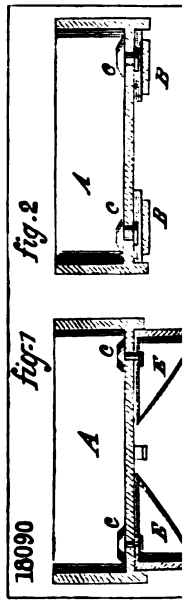

fig.2

fig.1

16555

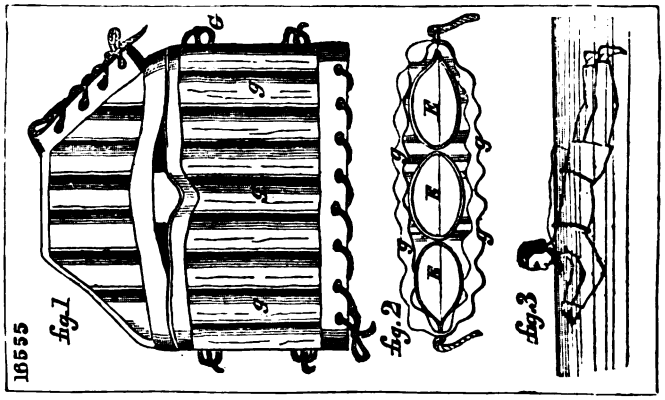

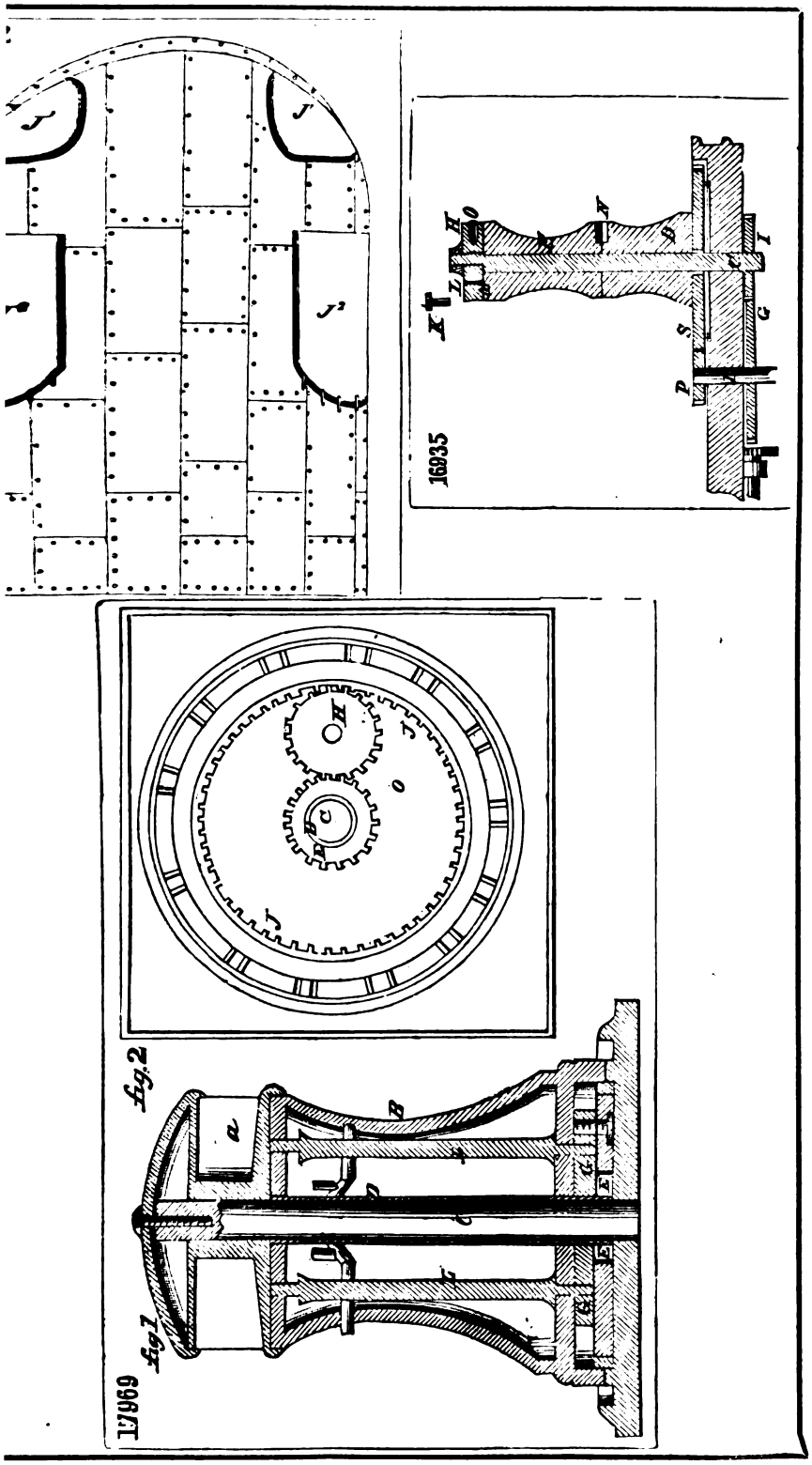
16935
Fig. 2
Fig. 1
16936

18053

fig.2

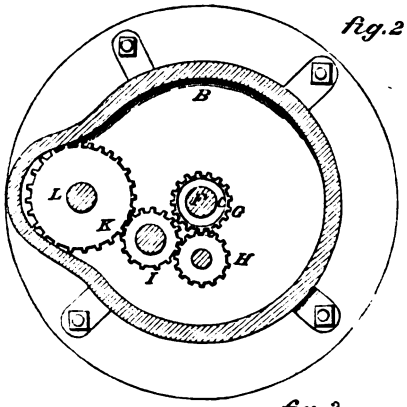

fig.1

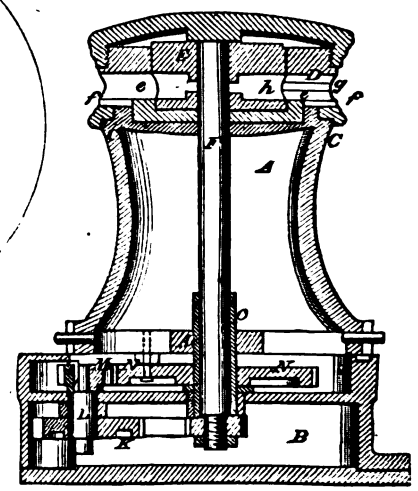

fig.3

18260

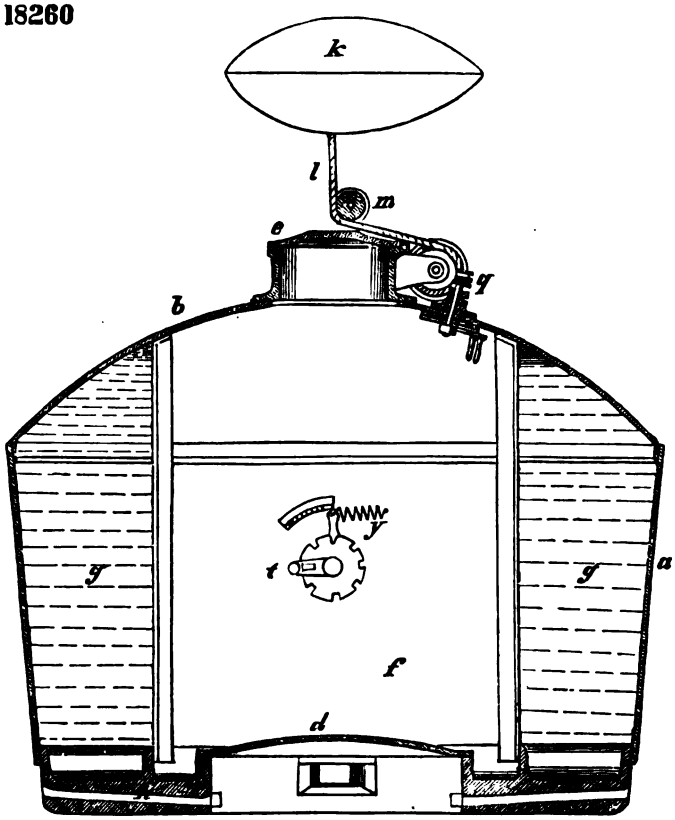

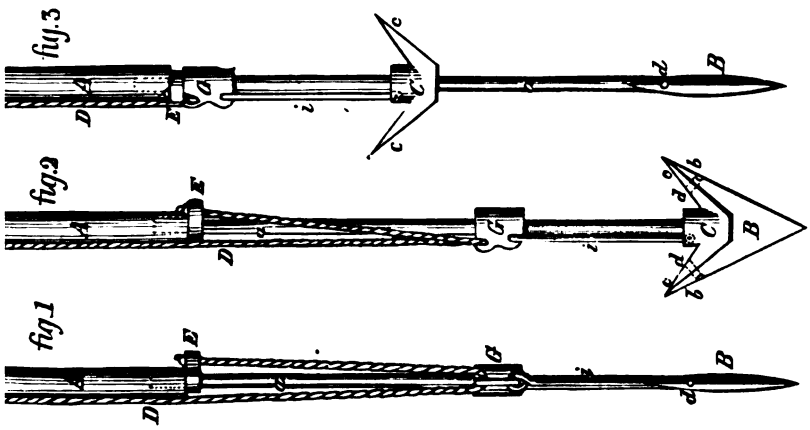

17434

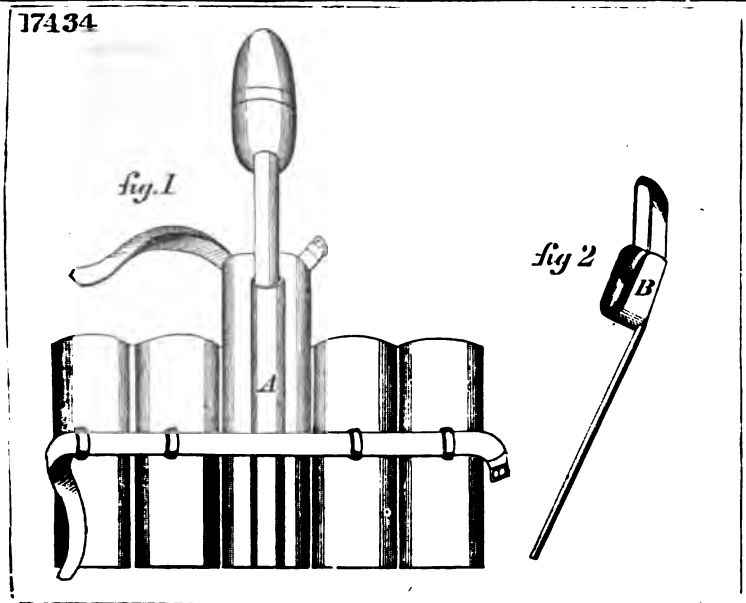

43

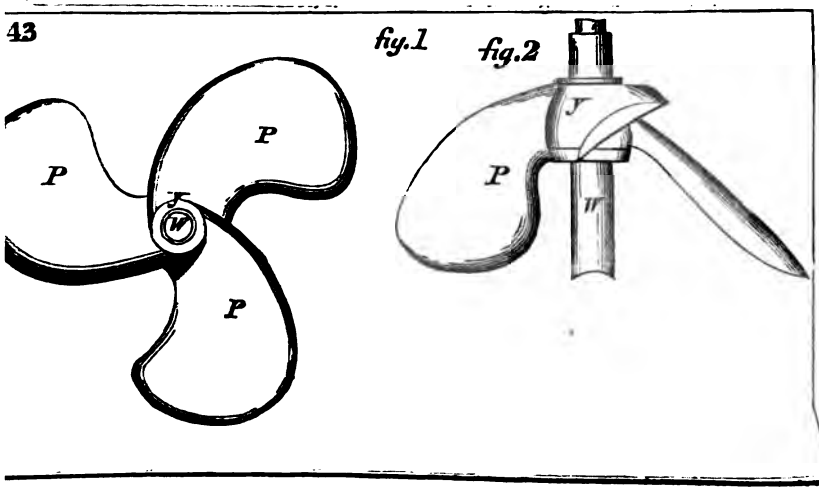

18869

fig.1

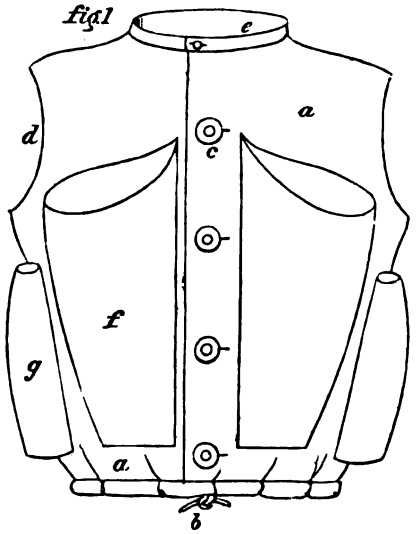

fig.2

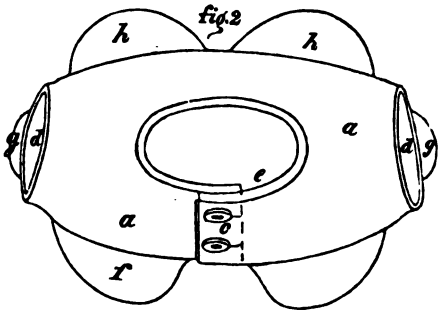

18274

fig.2

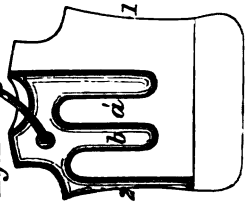

fig.1

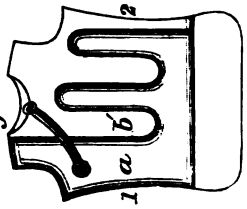

18809

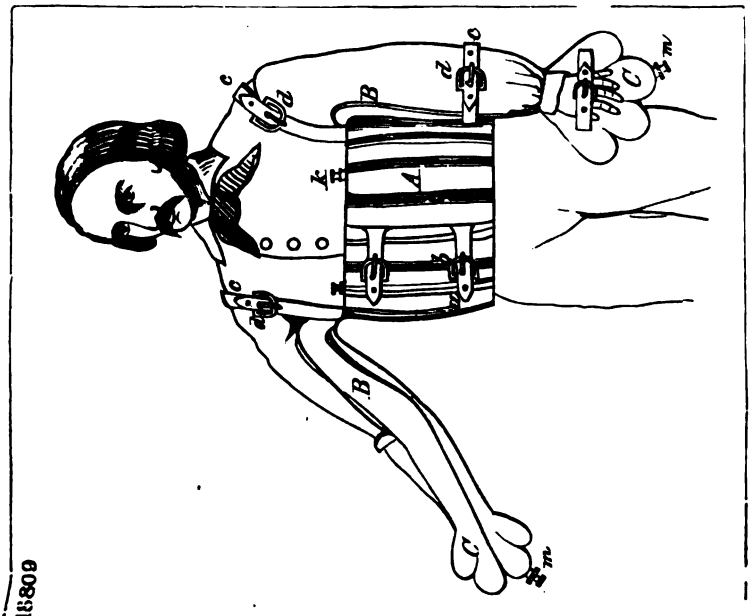

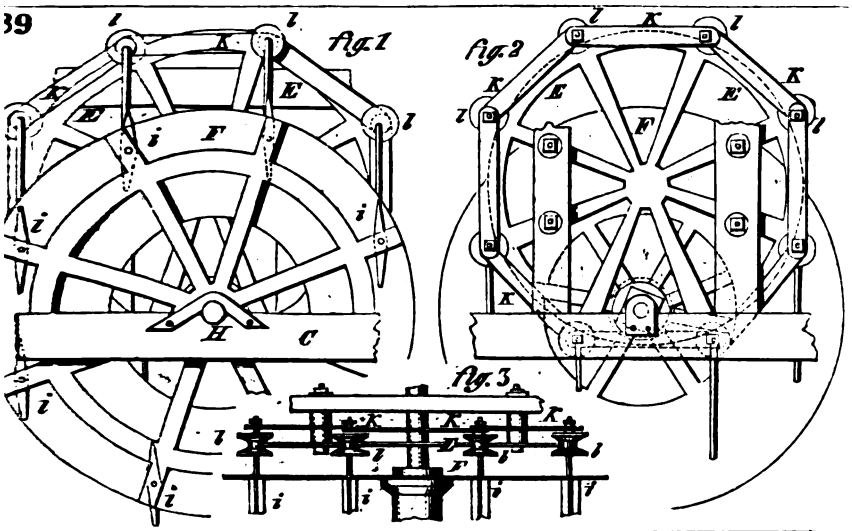
39
Fig. 1
Fig. 2
Fig. 3

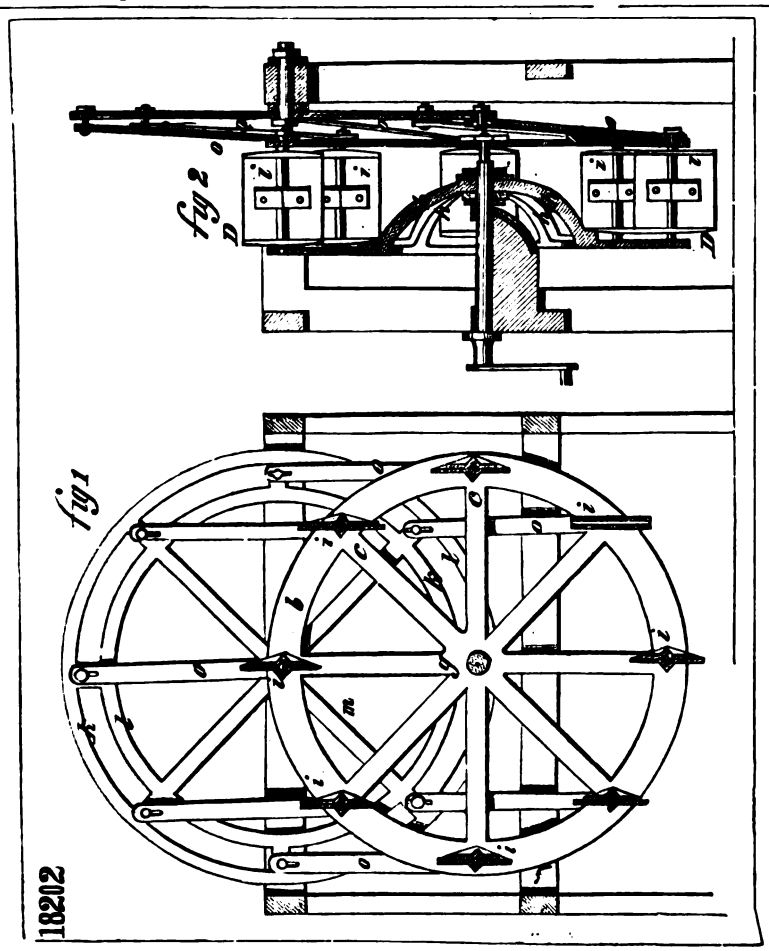
fig 2
fig 1
18202

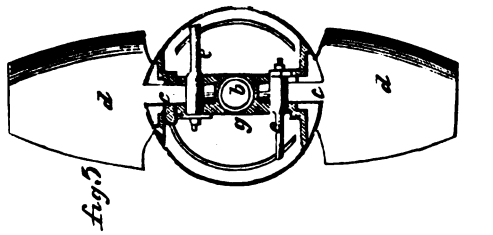
fig.5

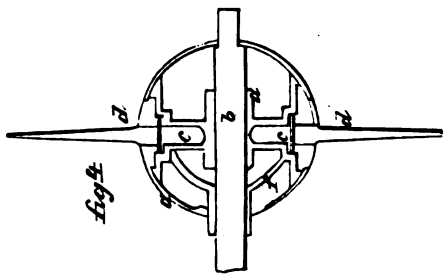
fig.4

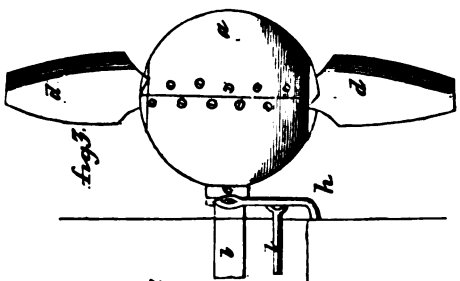
fig.3

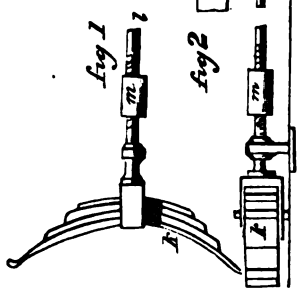
fig.1
fig.2

17016

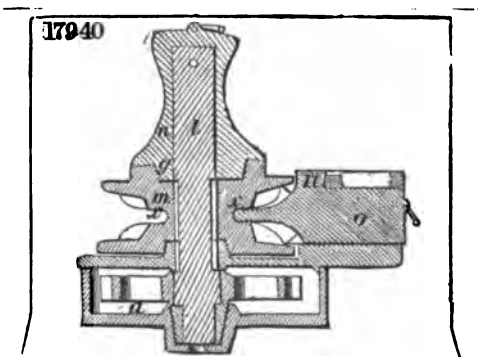
17940

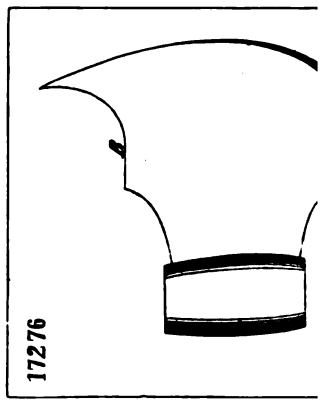
17276

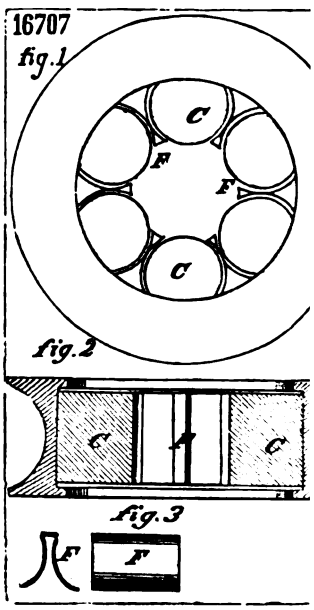
16707
fig.1
fig.2
fig.3

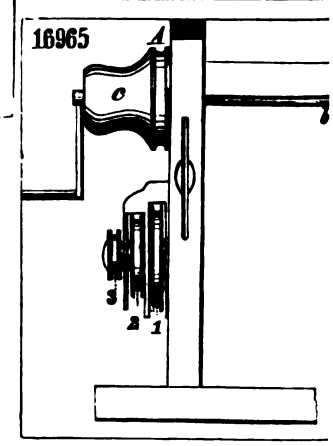
16965

314

fig. 1

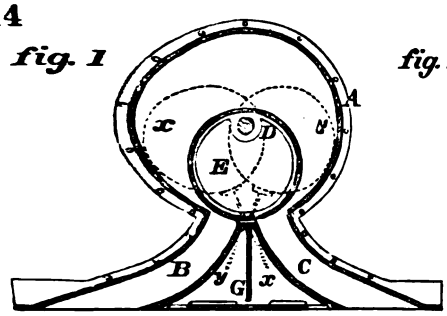

fig. 2

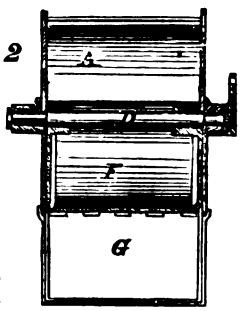

fig 3

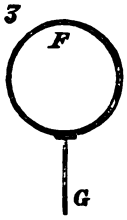

fig 4

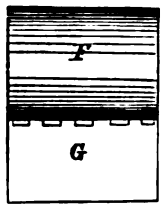

2

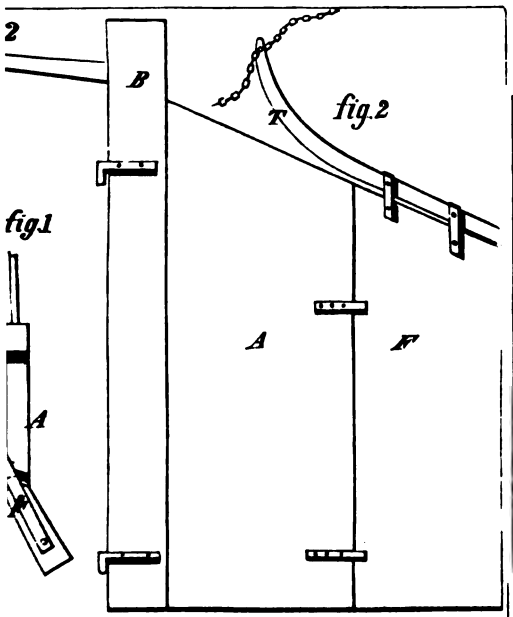

fig.2

fig.1

16352

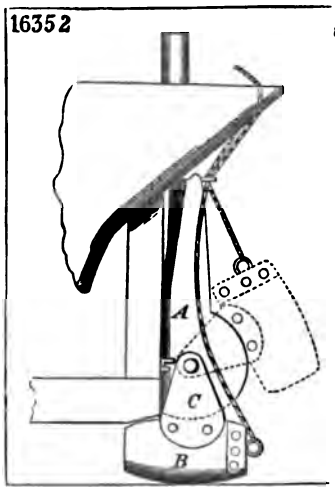

16969

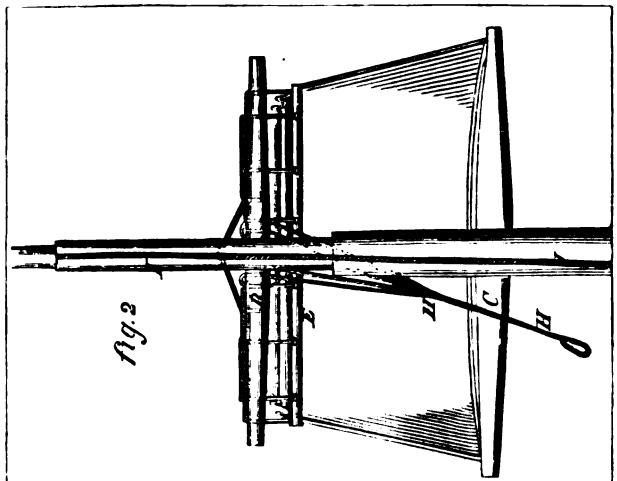

17156

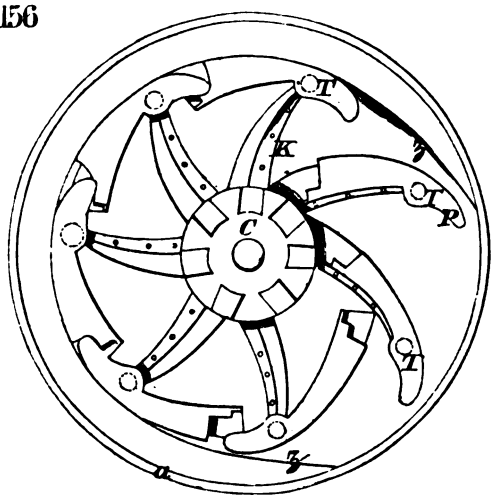

17101.

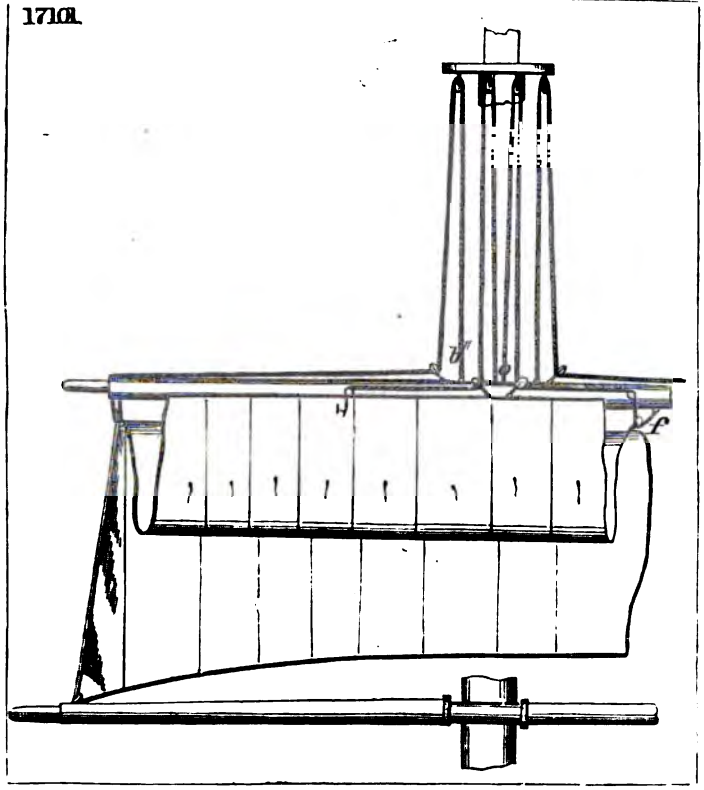

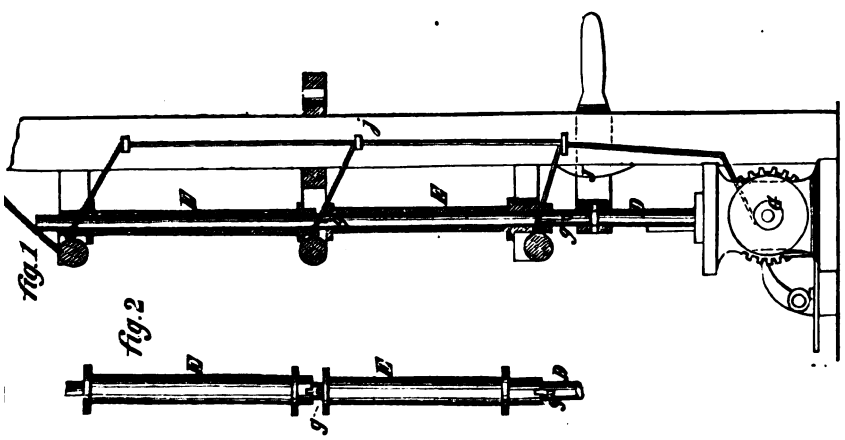

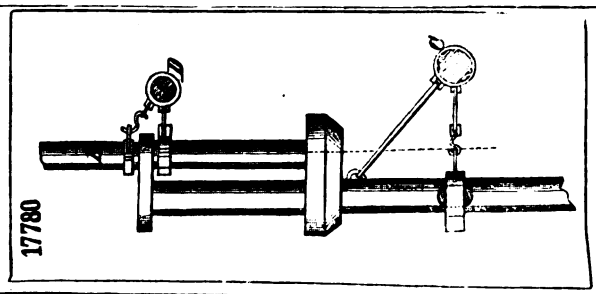

17780

17616

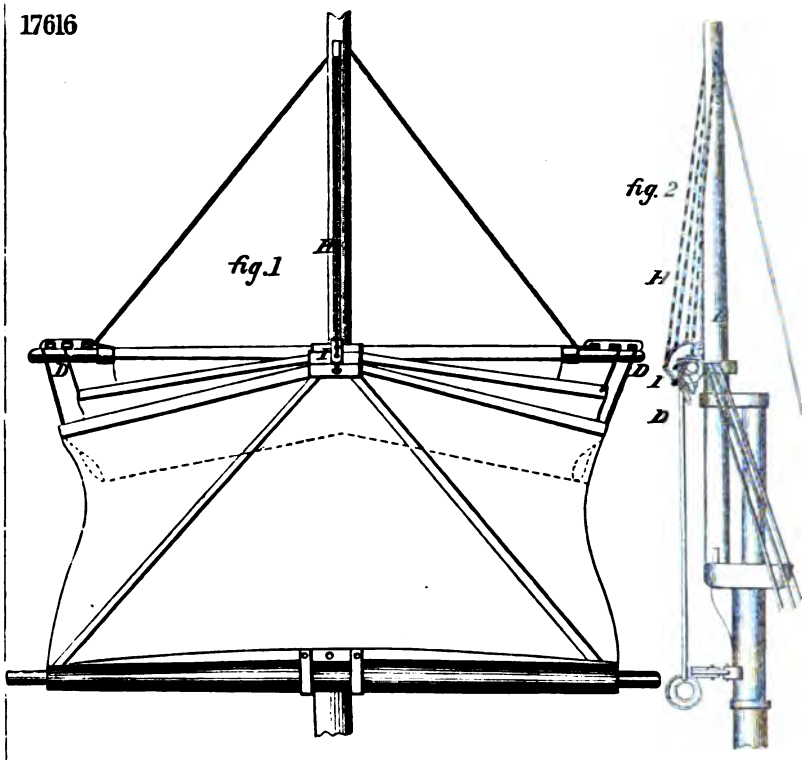

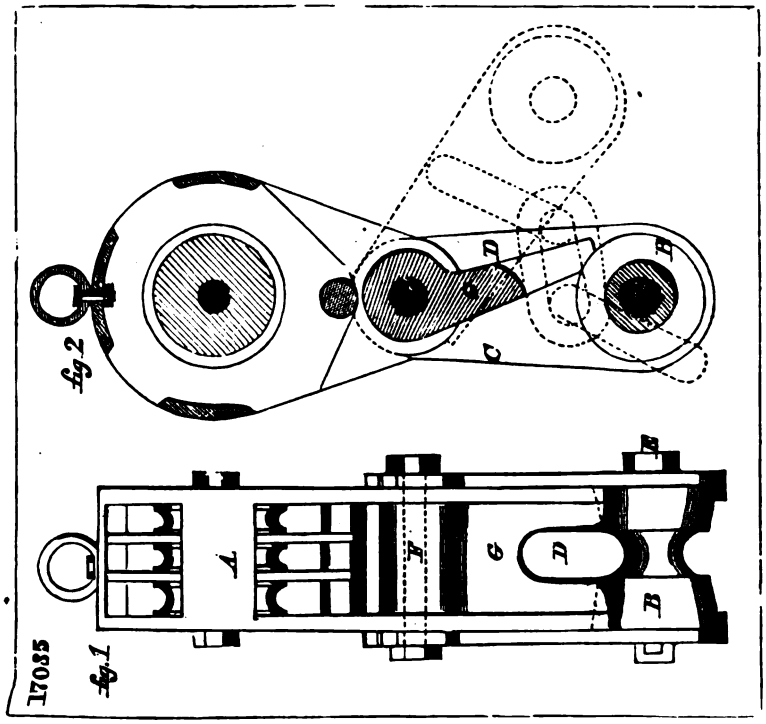

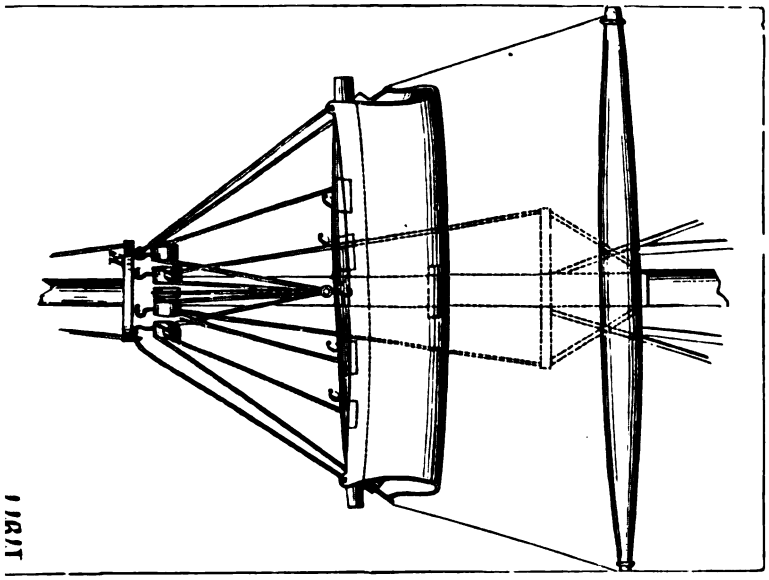

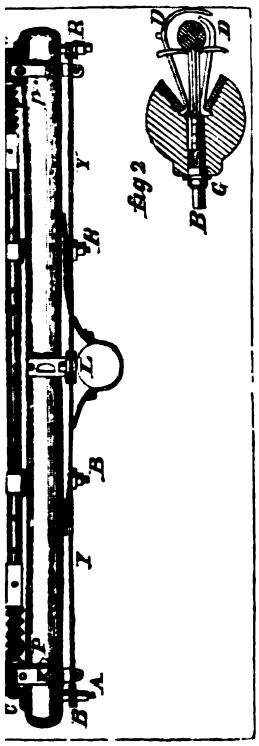

J8814

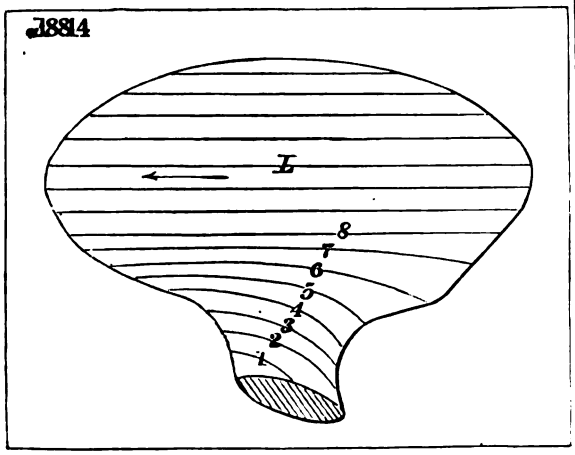

17228

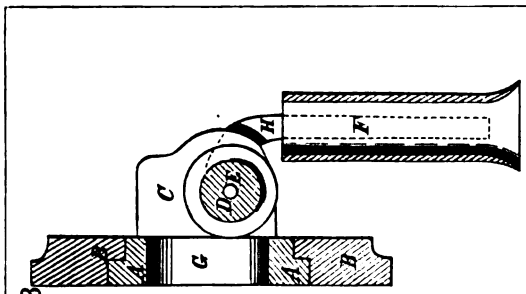

17975

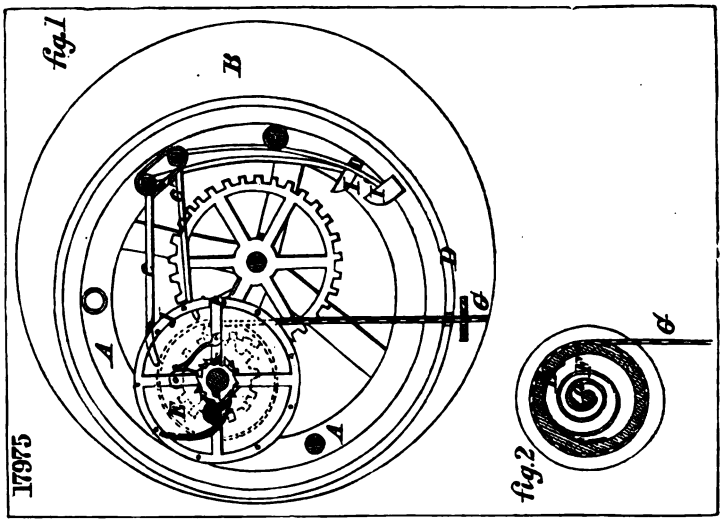

16885

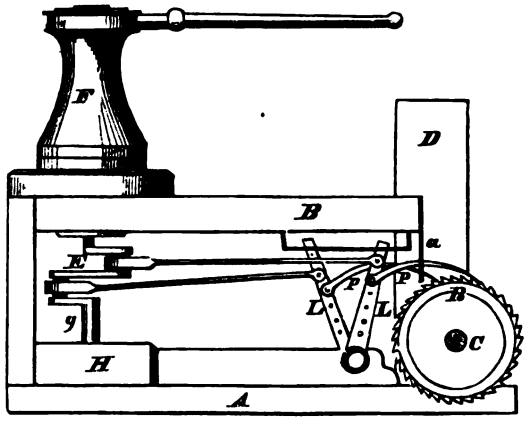

18663

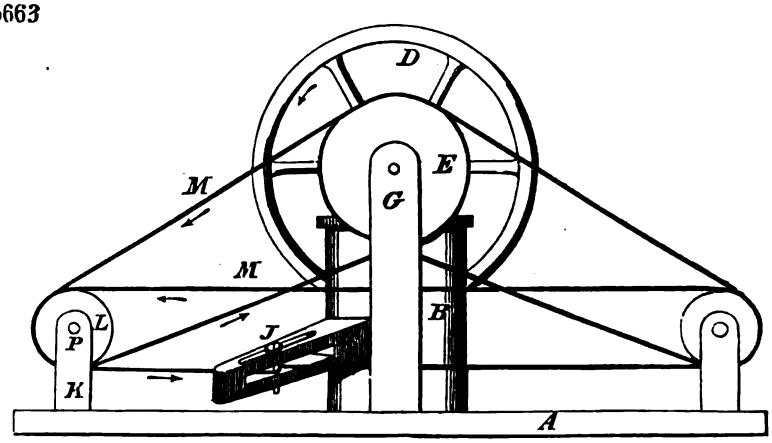

17633

fig.1

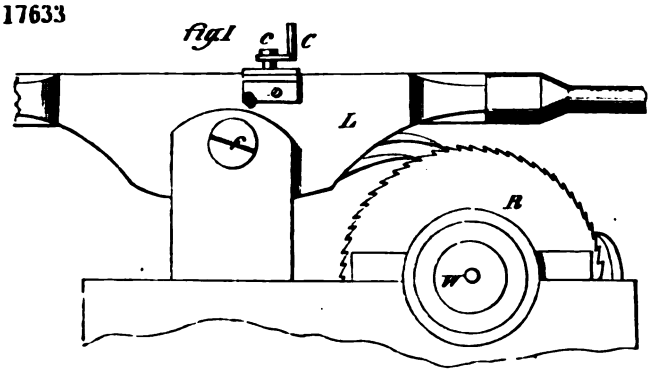

fig.2

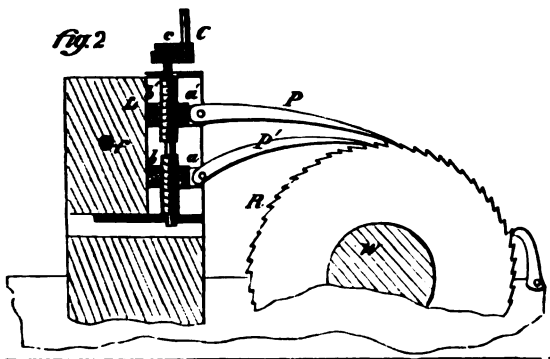

17724

fig.1

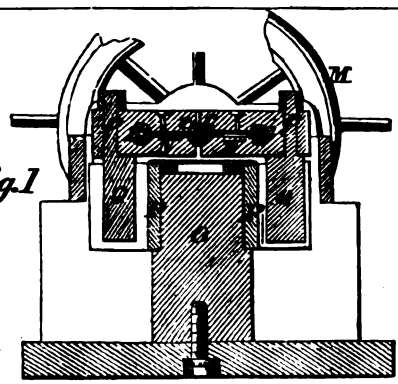

fig.2

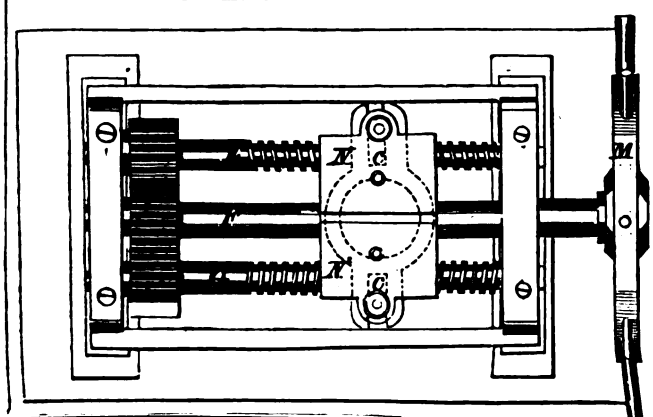

17209

fig 1

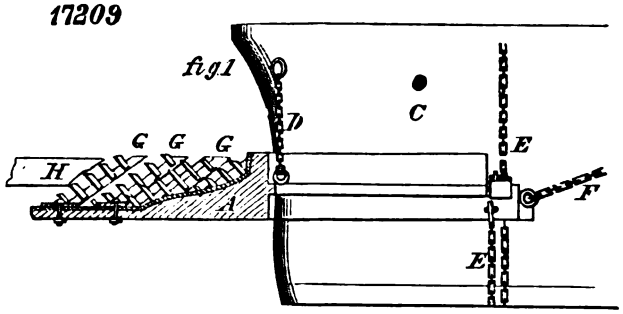

fig 2

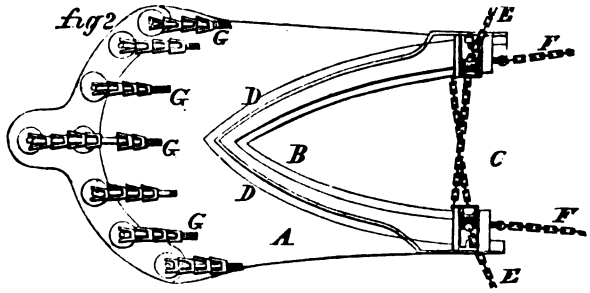

17365

fig. 1

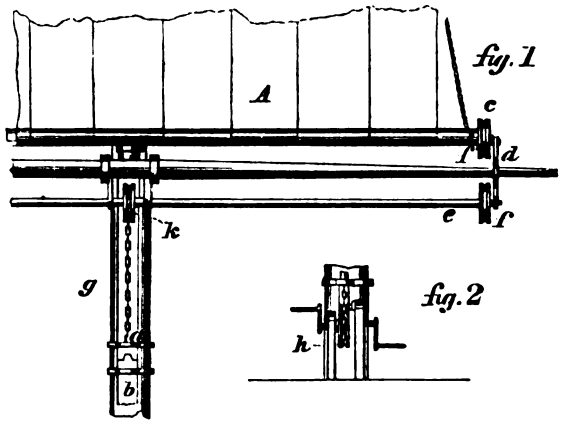

fig. 2

17598

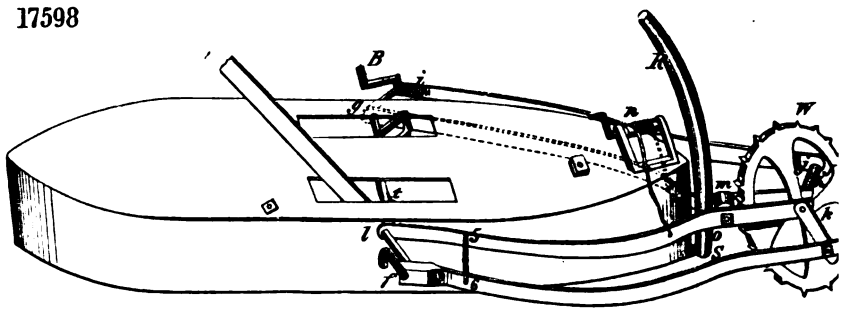

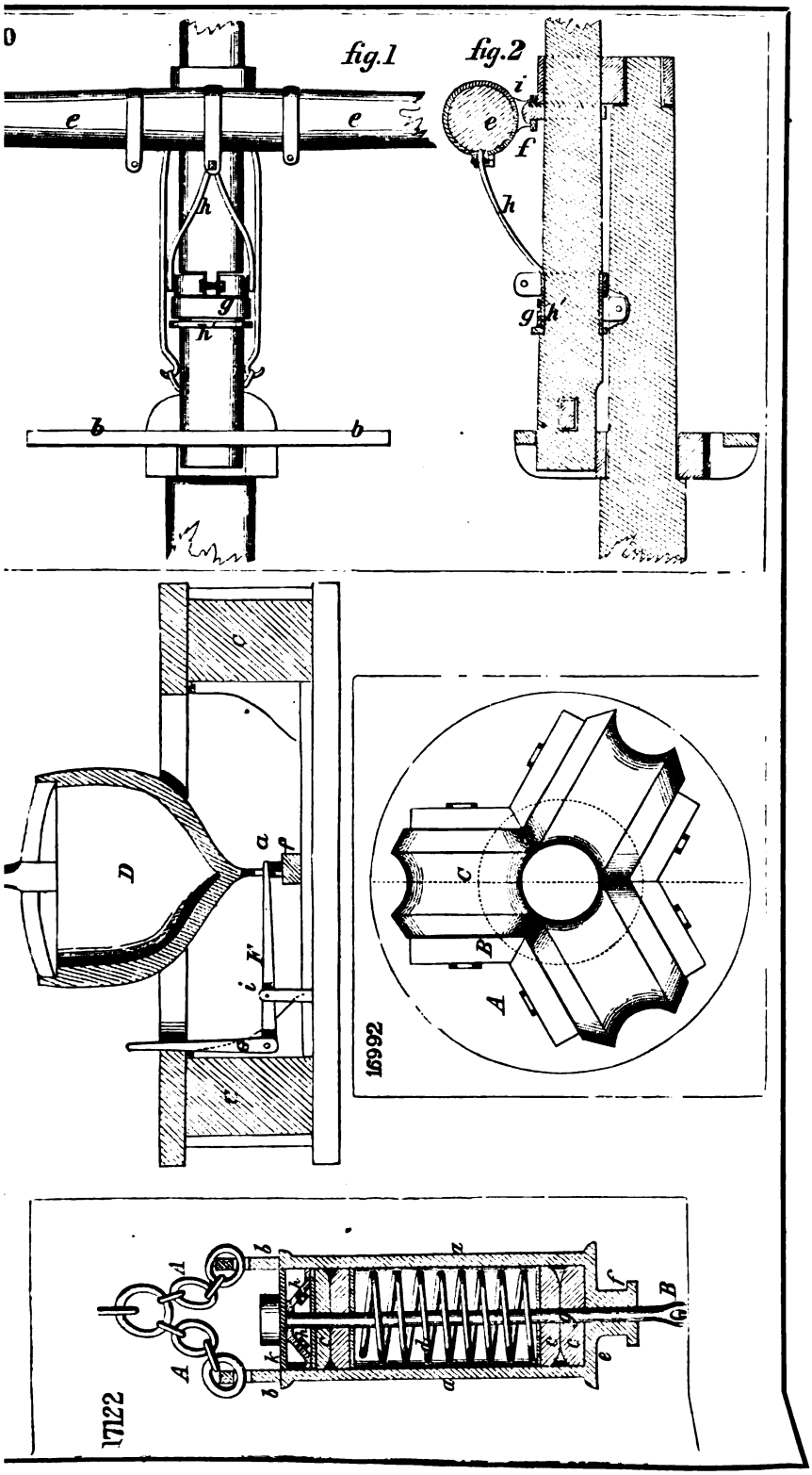
fig.1
fig.2
16992
17122

18969

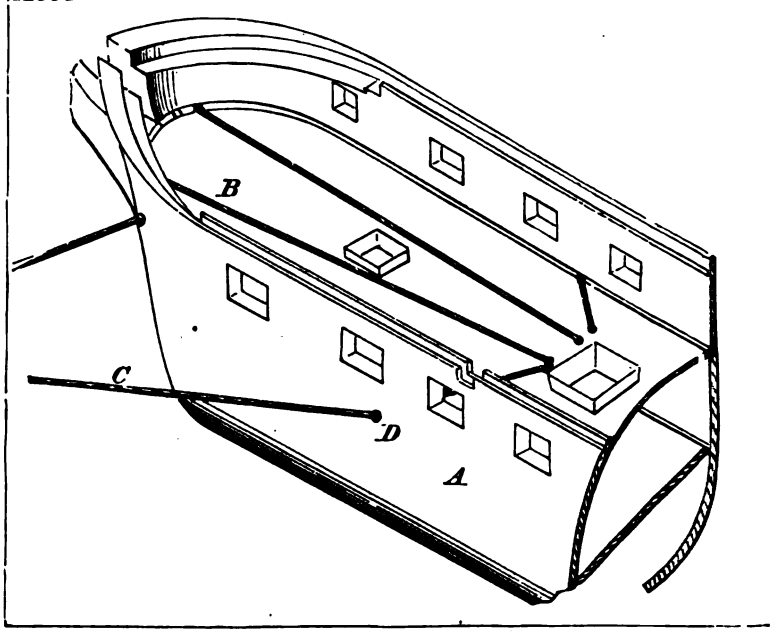

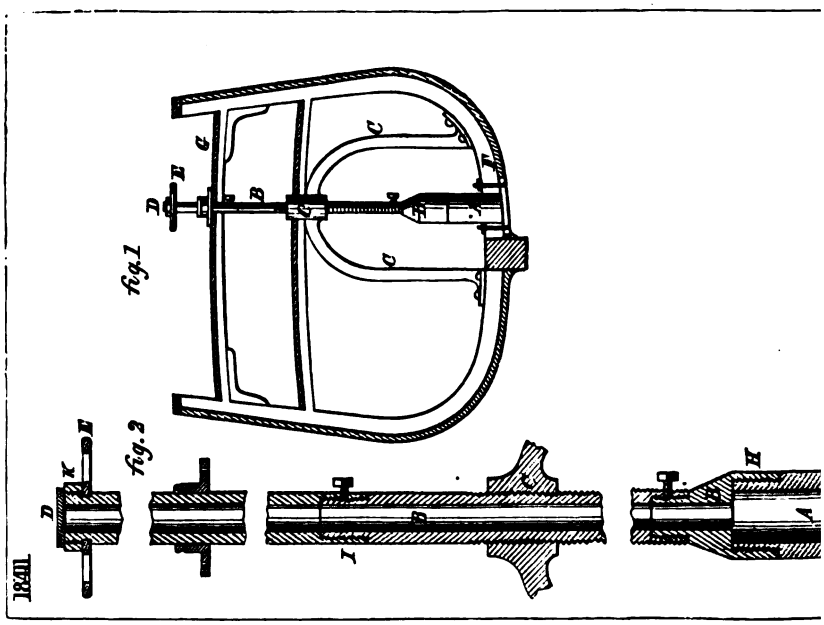

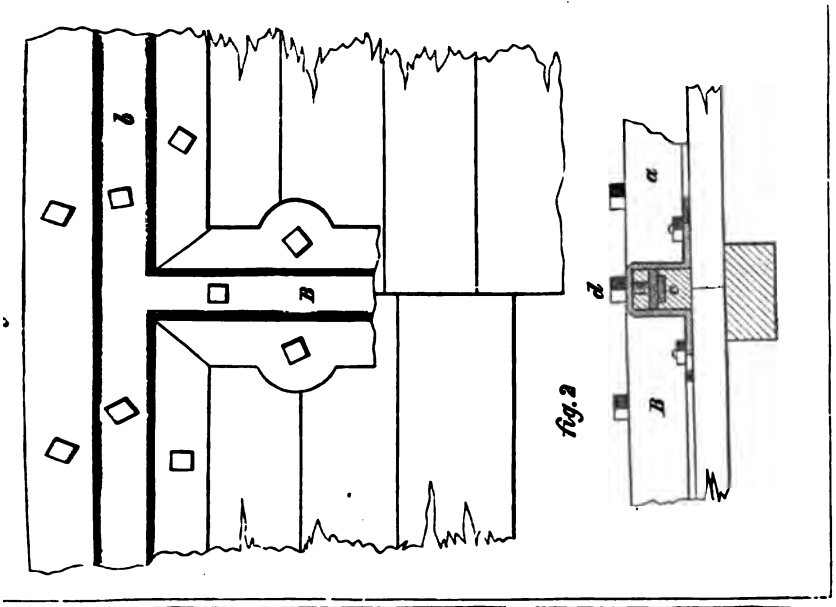

Fig. 2

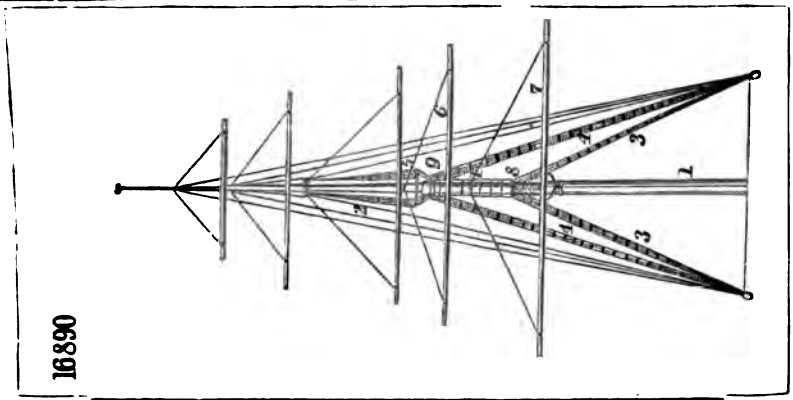

16819

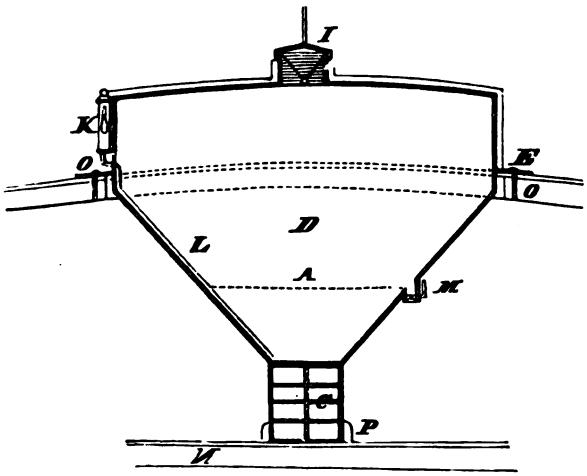

17165

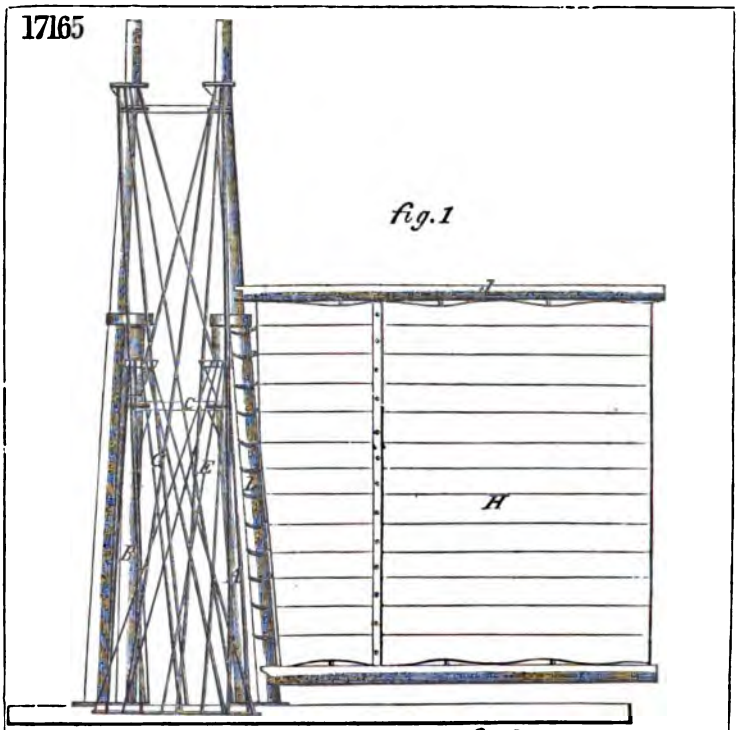

7826

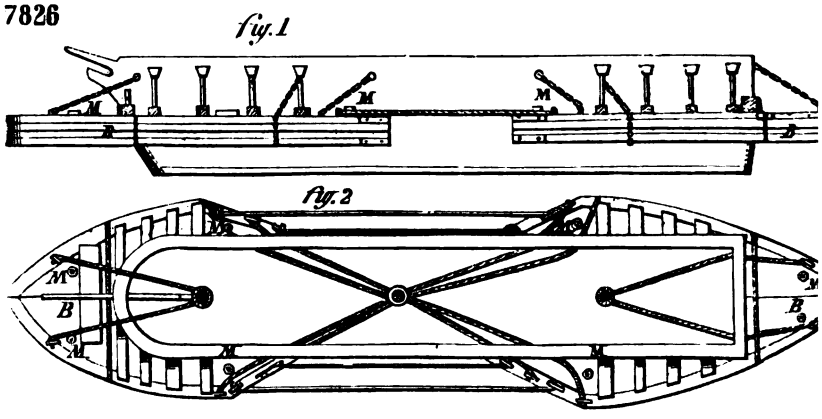

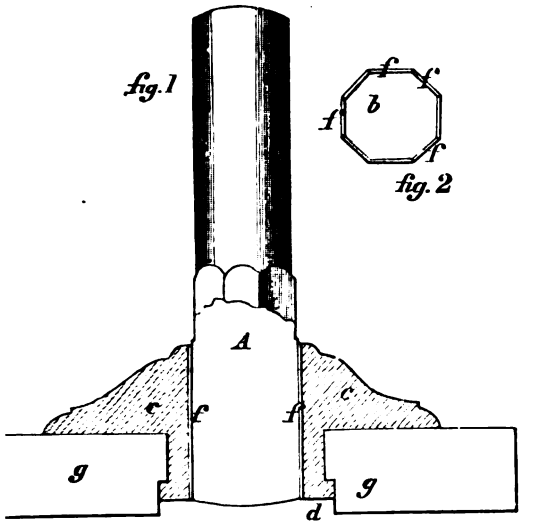

fig. 2

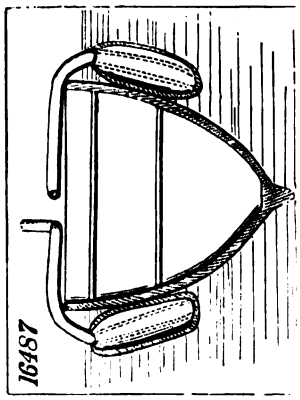

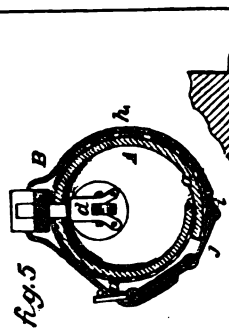

fig. 5

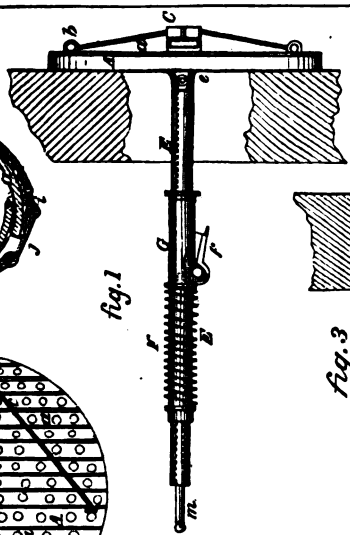

fig. 1

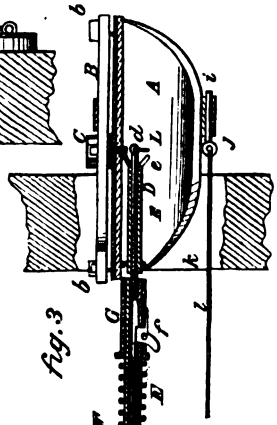

fig. 3

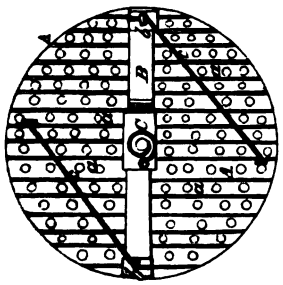

17852
fig. 2

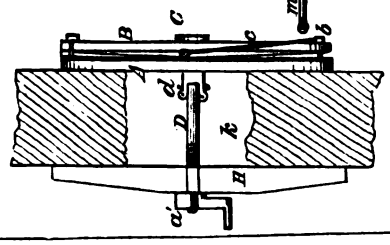

fig. 4

18835

fig1

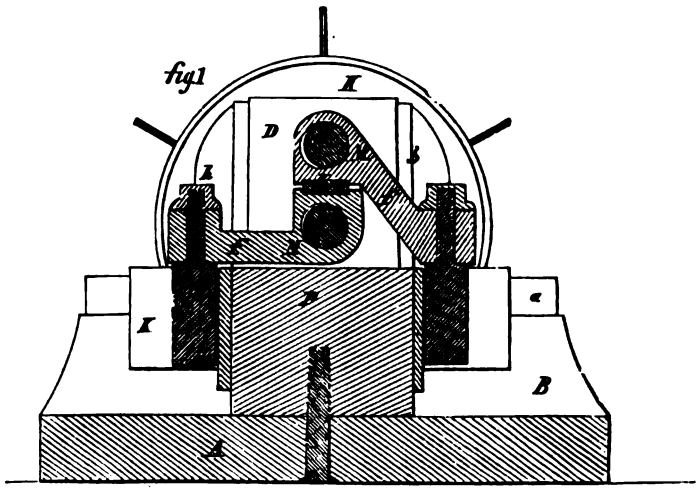

fig2

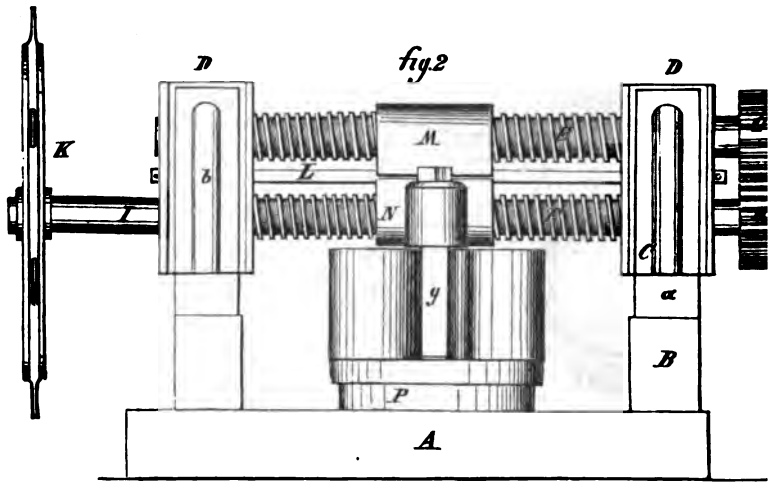

16621

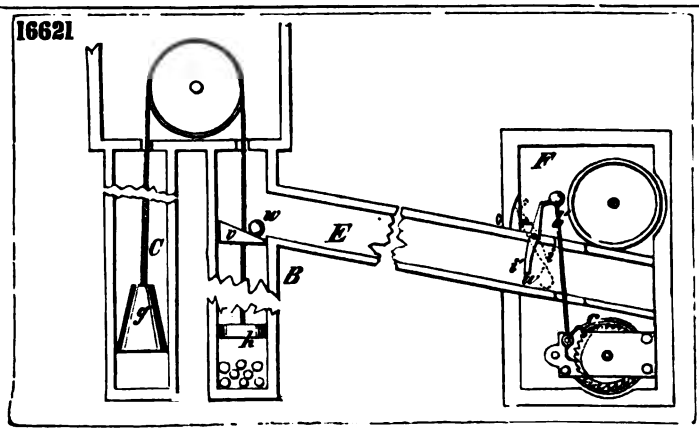

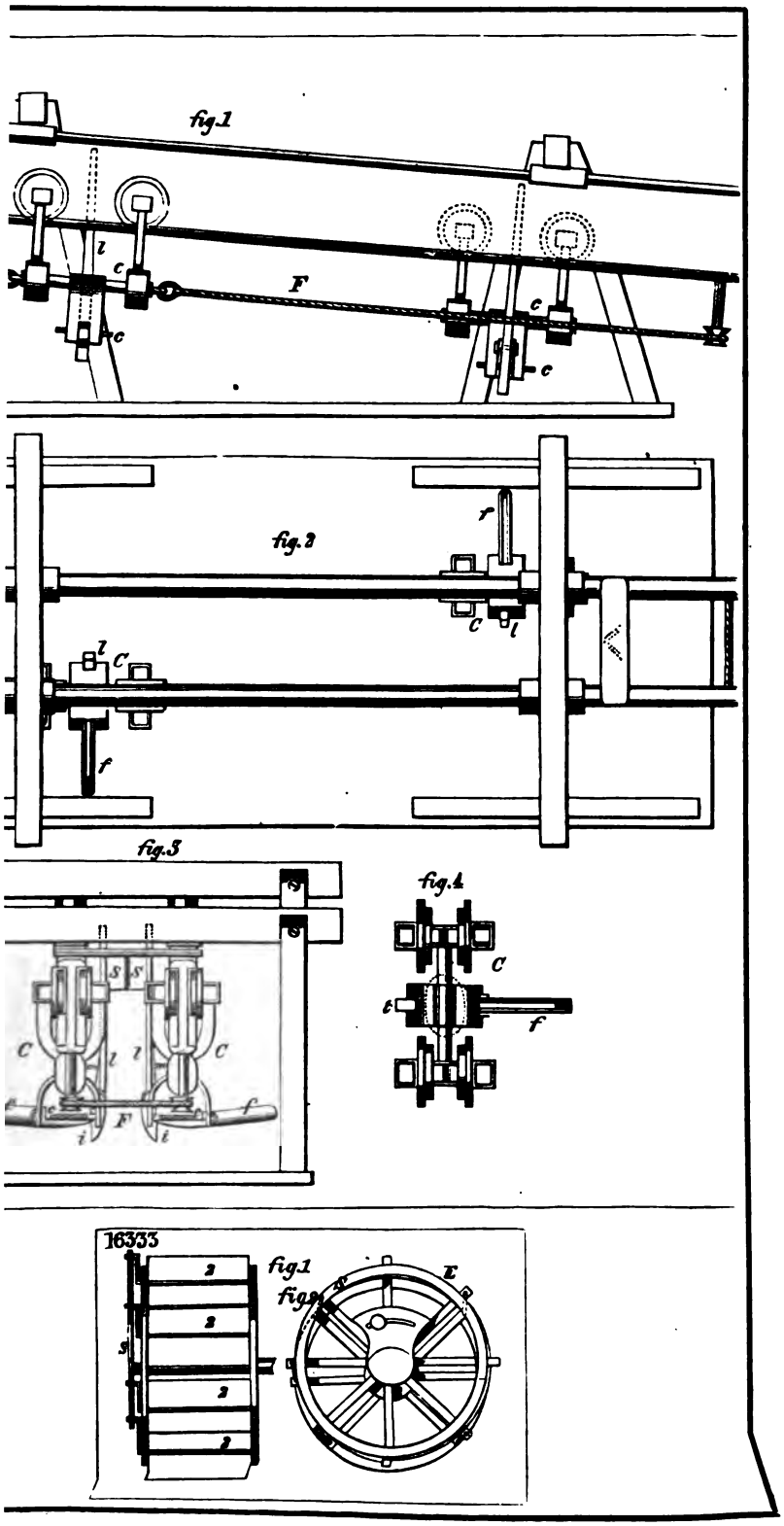
fig.1
l
c
F
c
c
c
fig.2
f
C
l
l
C
f
fig.3
S
S
C
l
l
C
F
i
i
f
fig.4
C
t
f
16333
fig.1
fig.2
E

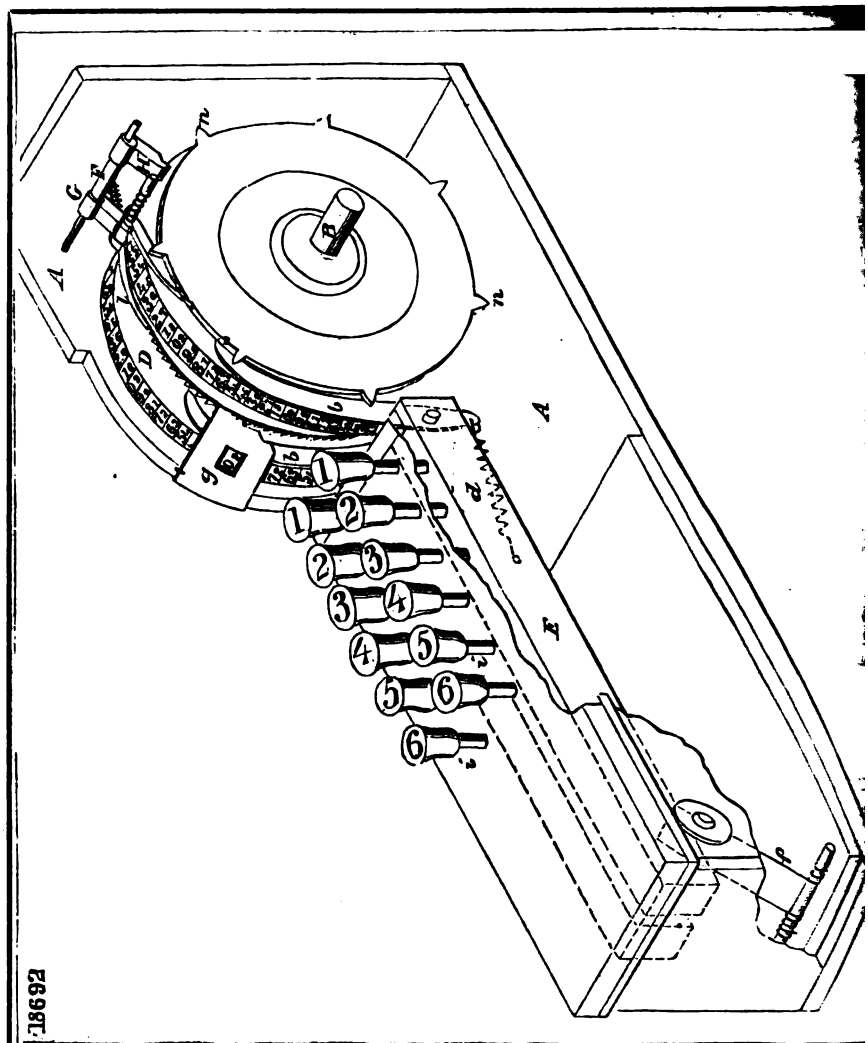
18692

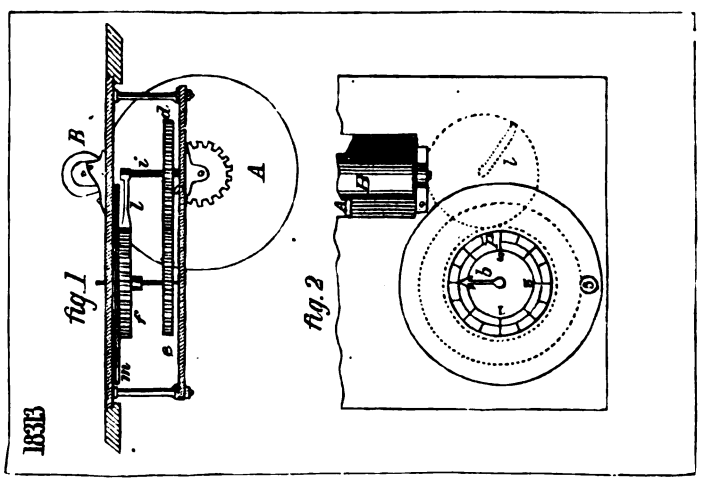
18313
fig. 1
fig. 2

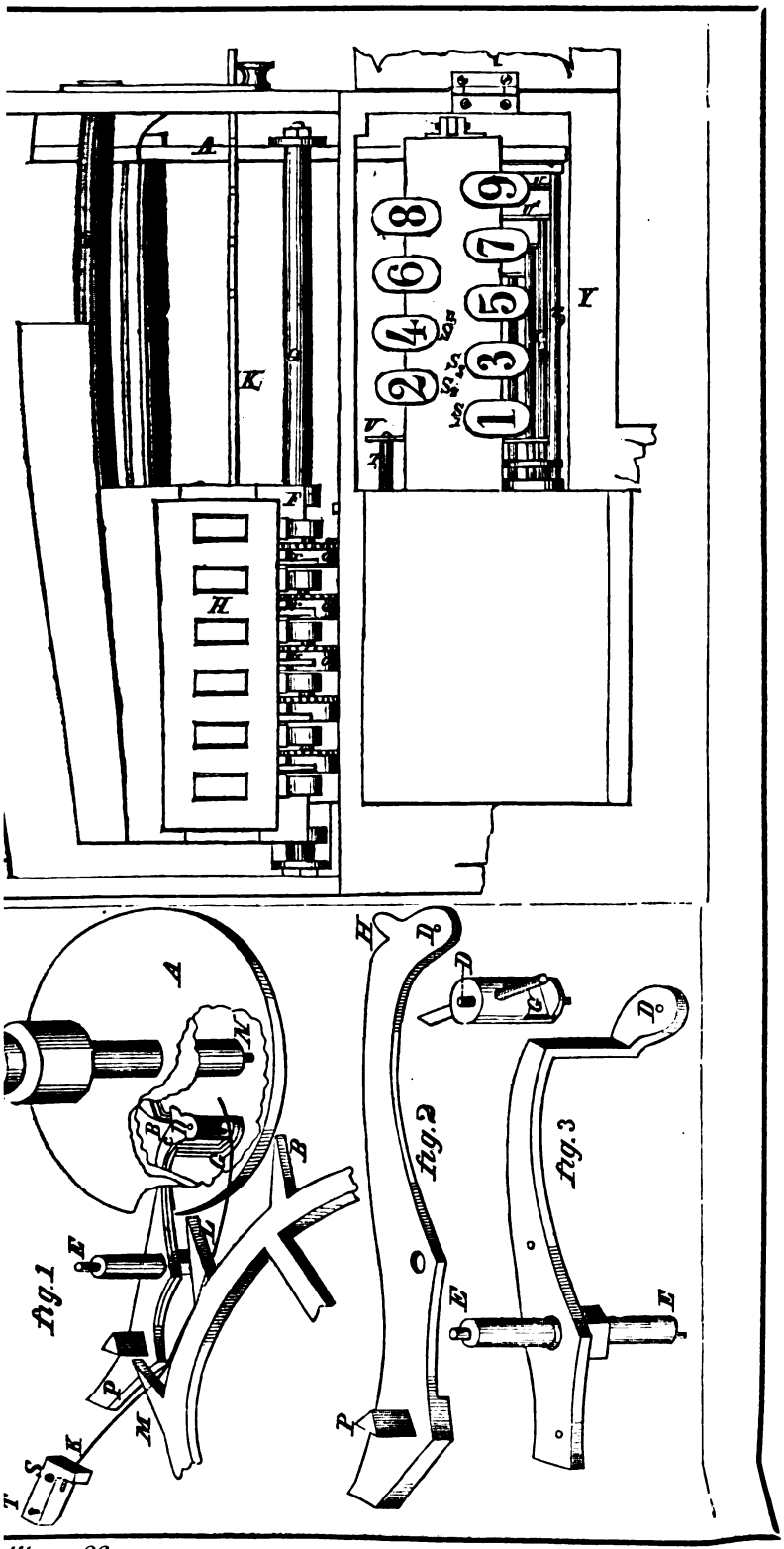
A
K
H
Y
1 3 5 7 9
2 4 6 8
Fig. 1
Fig. 2
Fig. 3

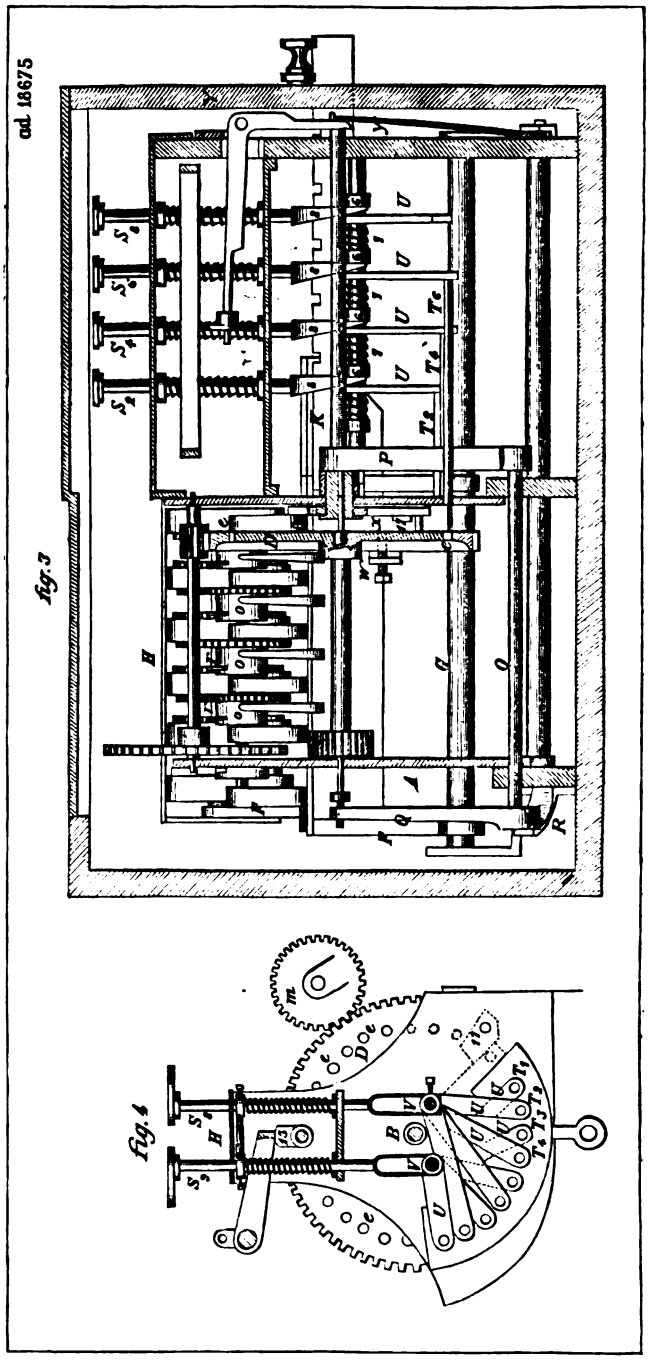
ad 18675
fig. 3
fig. 4

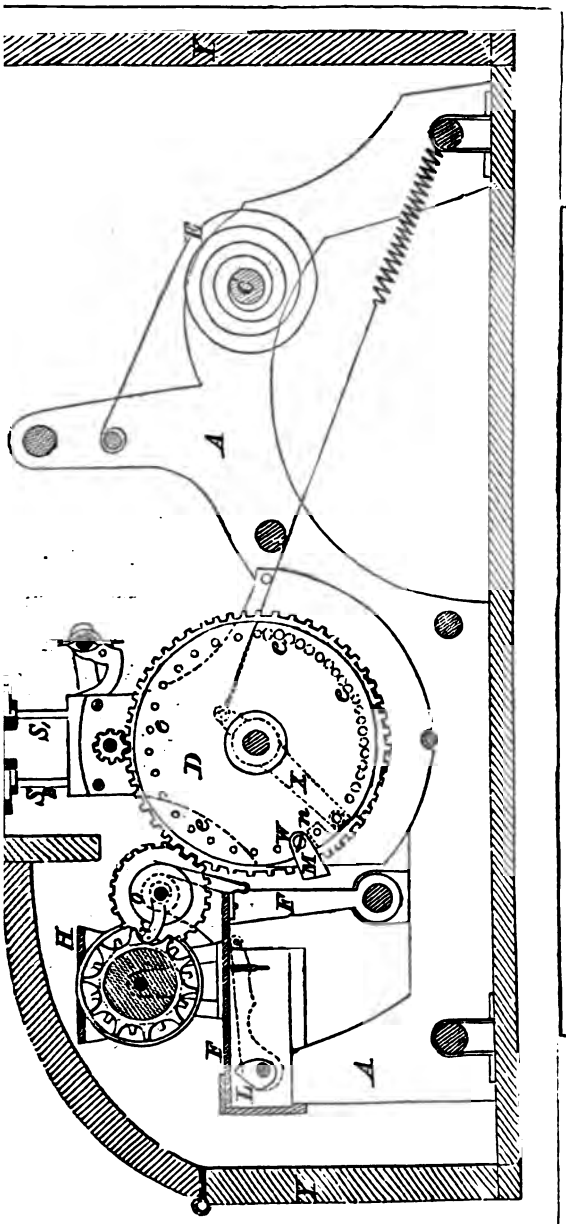

18560

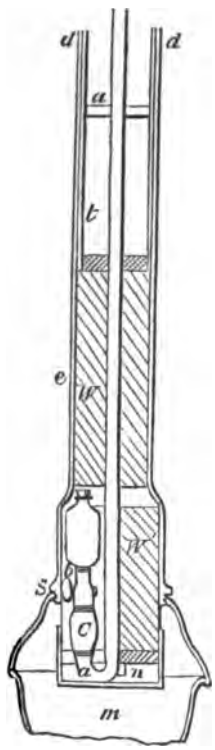

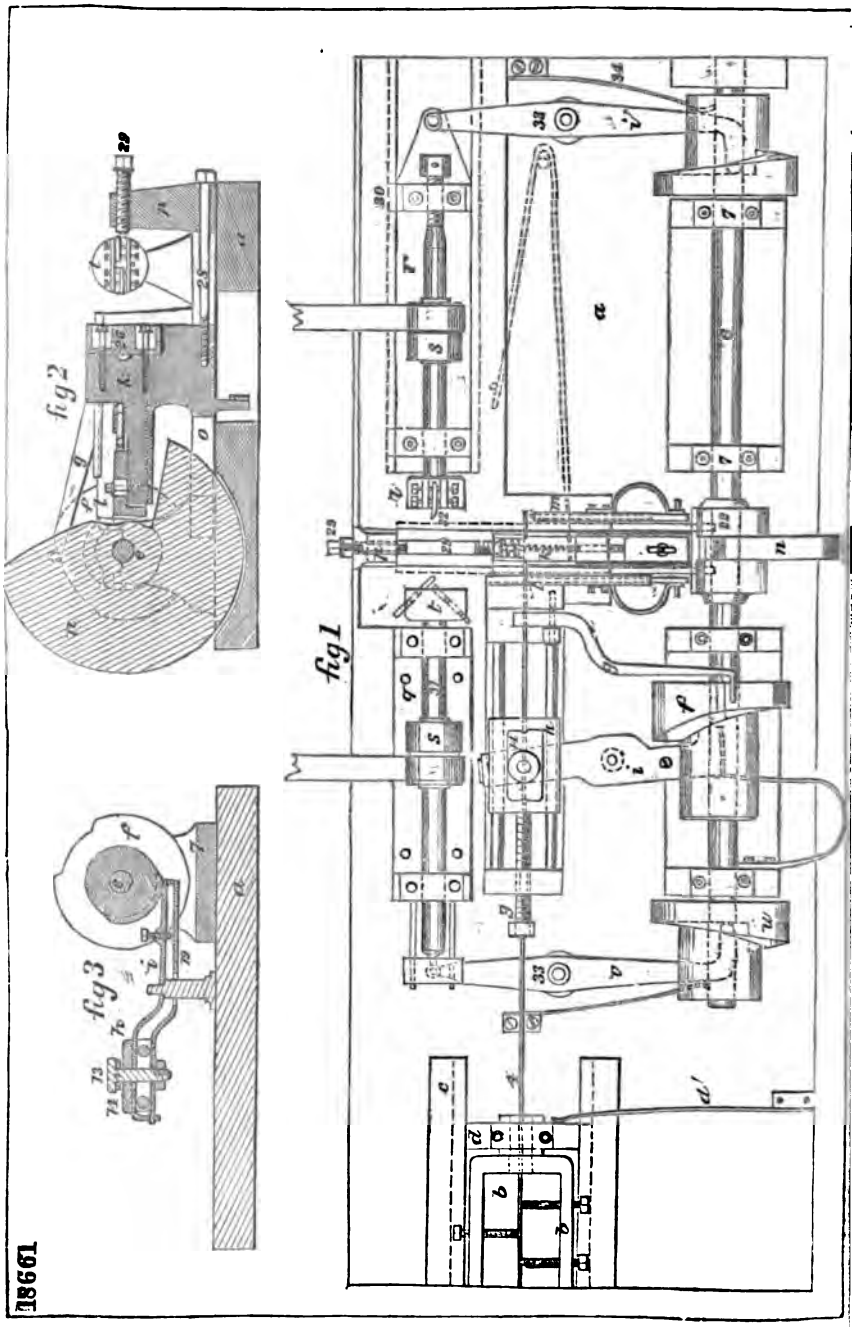
fig 2
fig 3
fig 1
18661

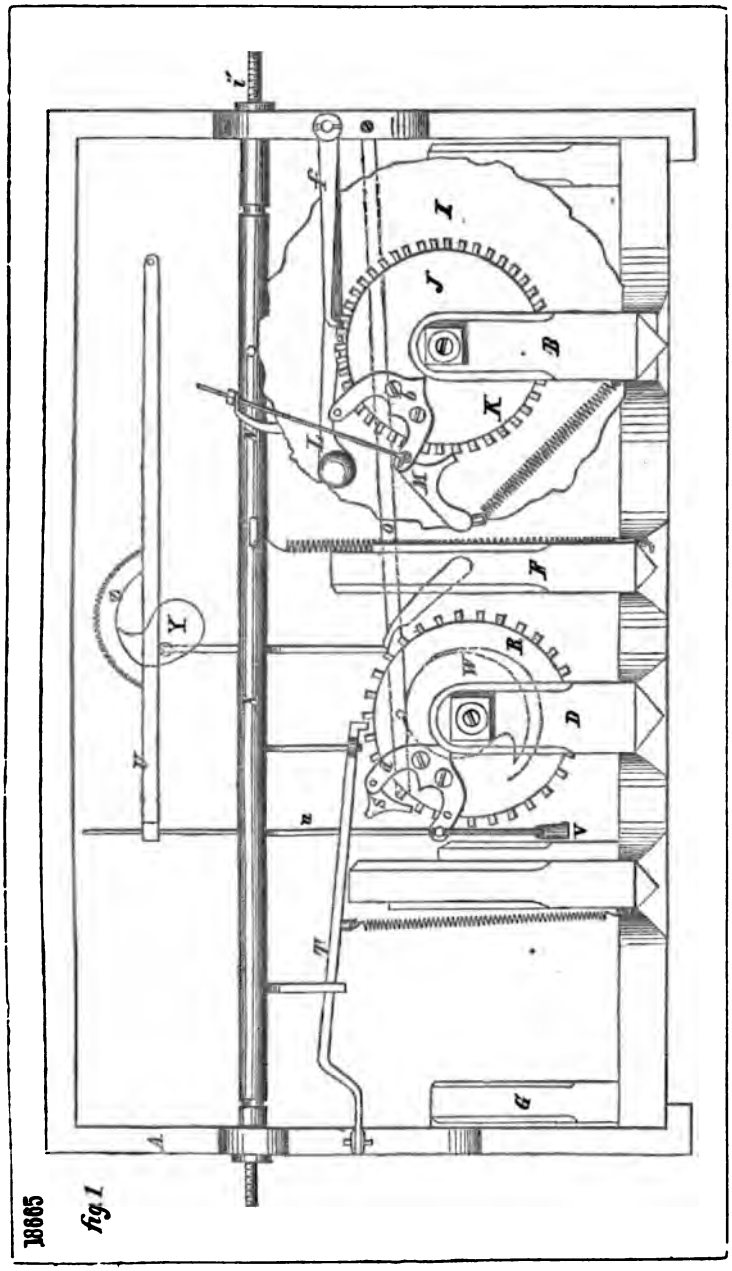

18665 fig. 1

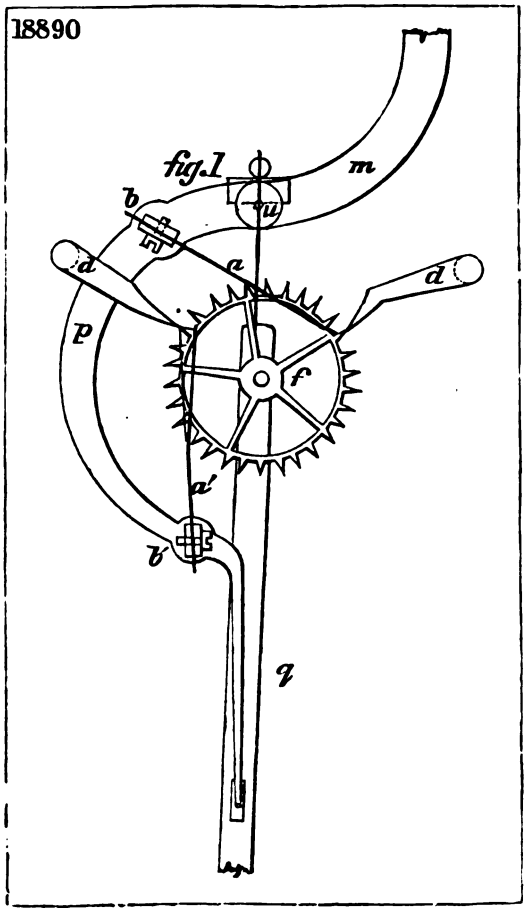
18890
fig.1
m
b
u
a
d
d
p
f
a'
b'
q

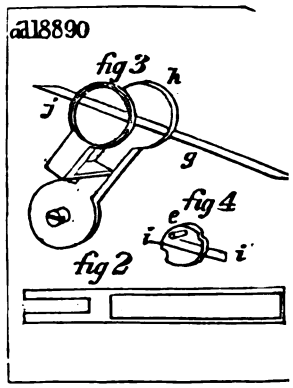
a118890
fig 3
h
j
g
fig 4
e
i
i'
fig 2

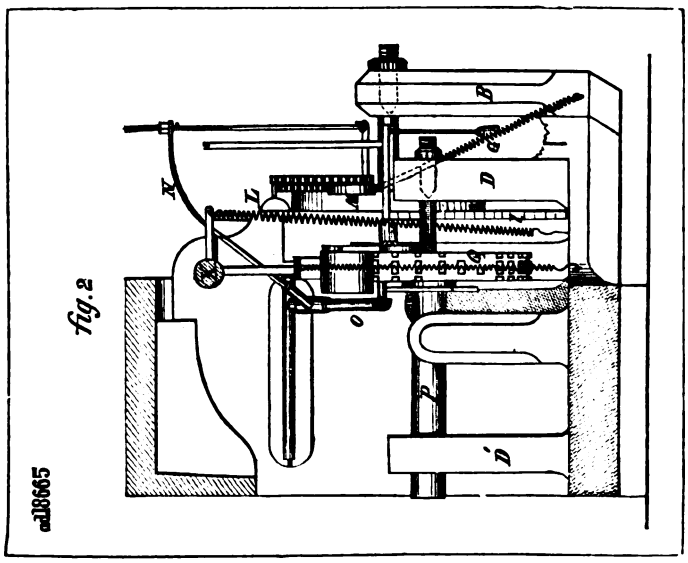
fig.2
a118665

628

fig 1

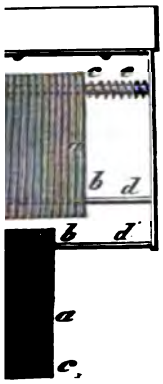

fig 2

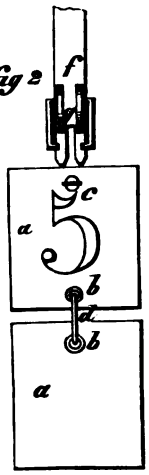

17185

fig. 1

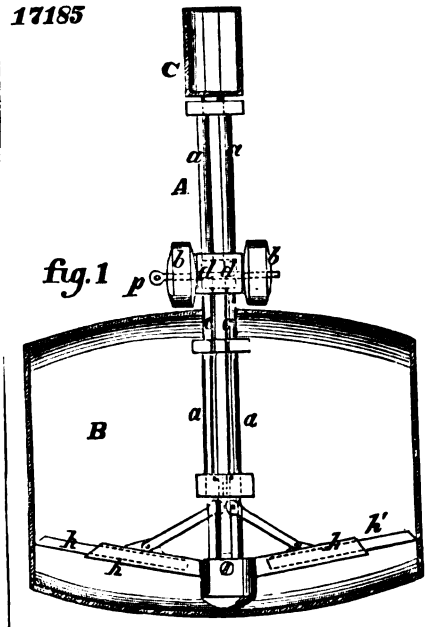

fig. 2

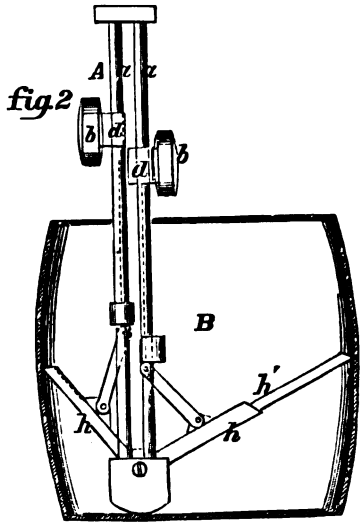

7481

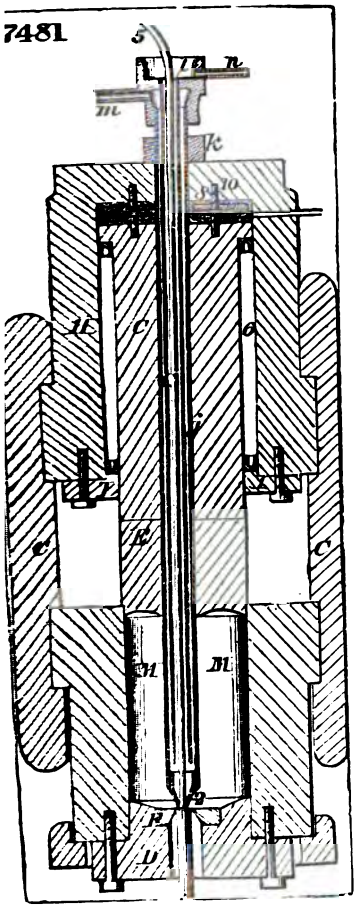

8908

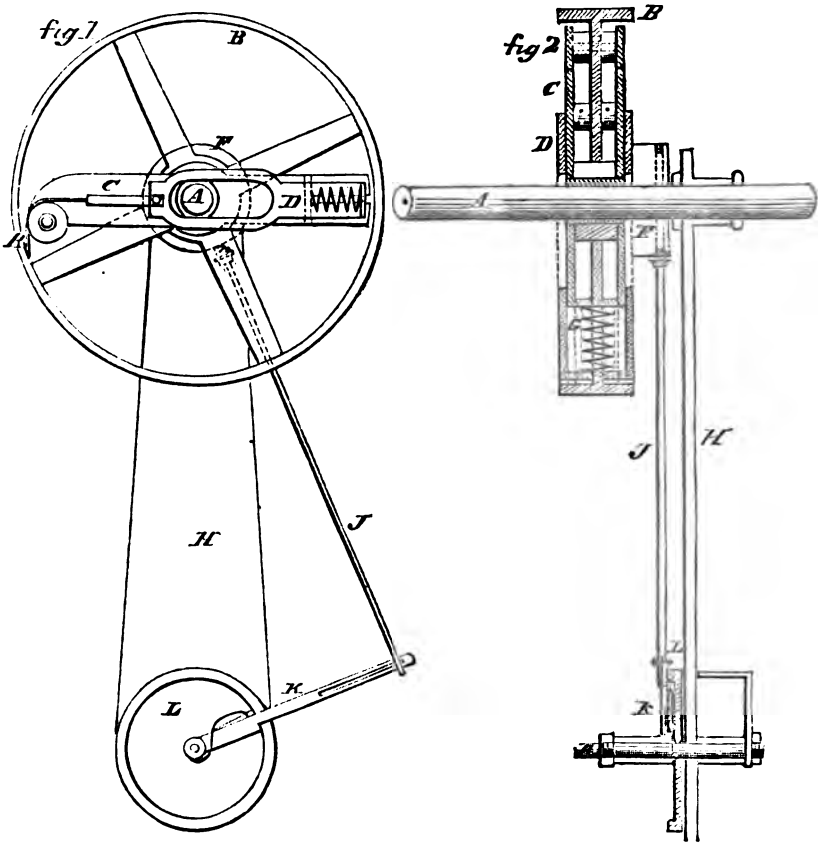

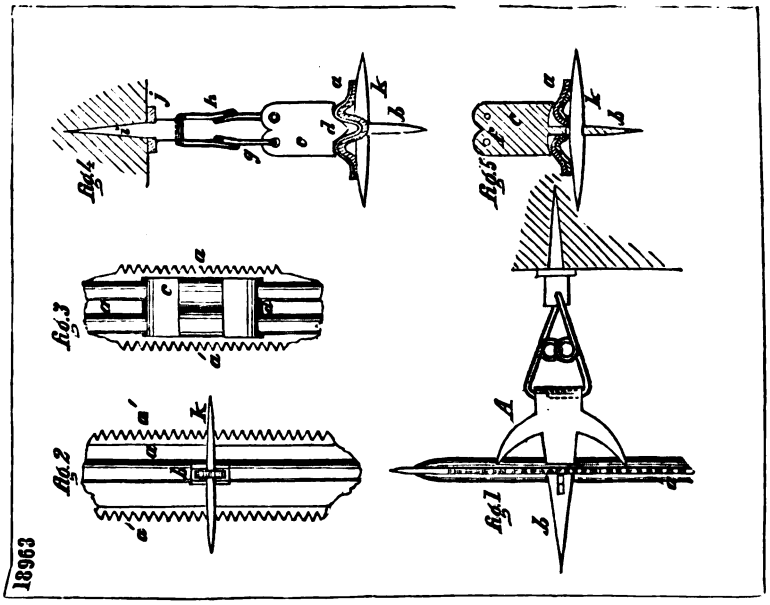

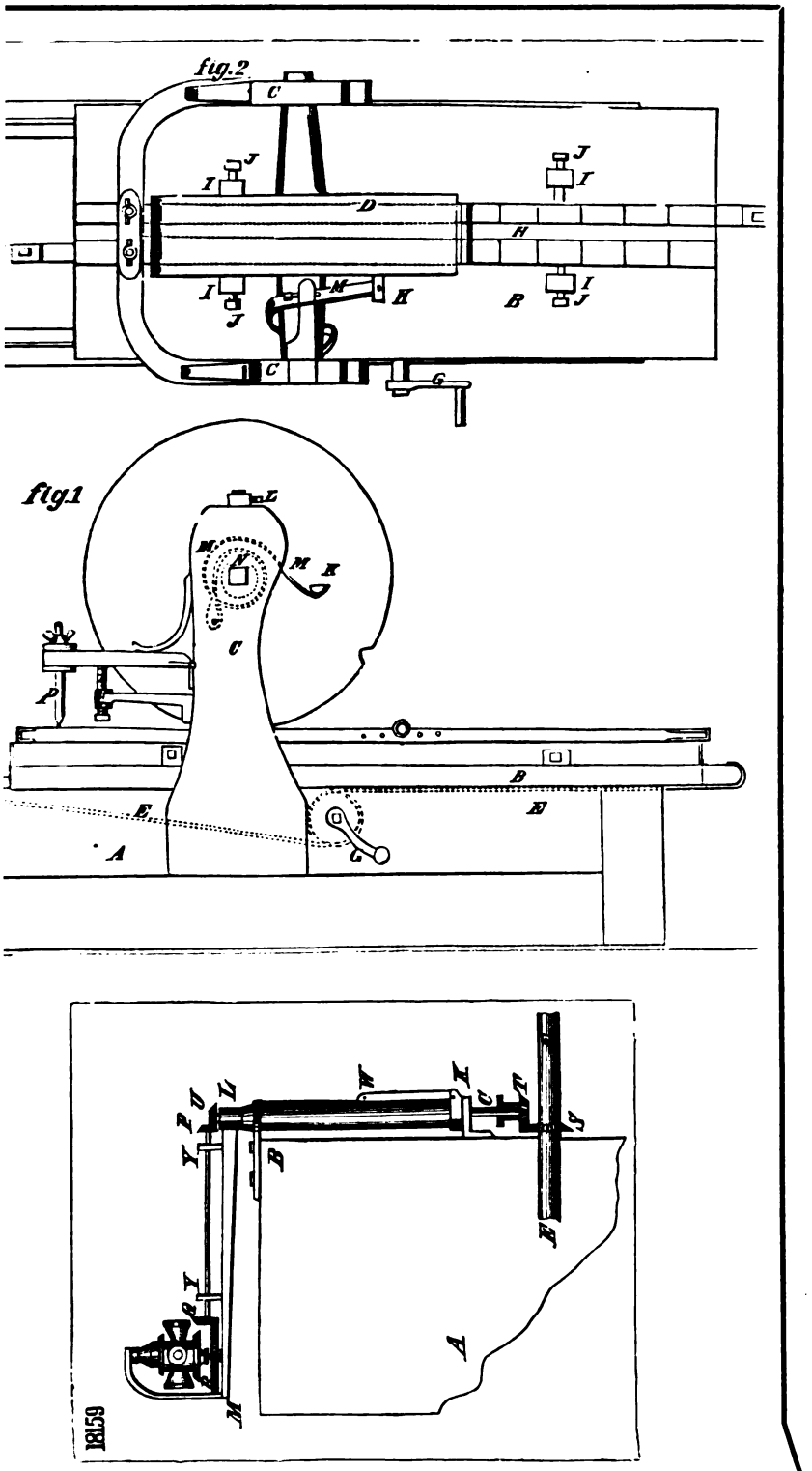
fig.2
fig.1
18159

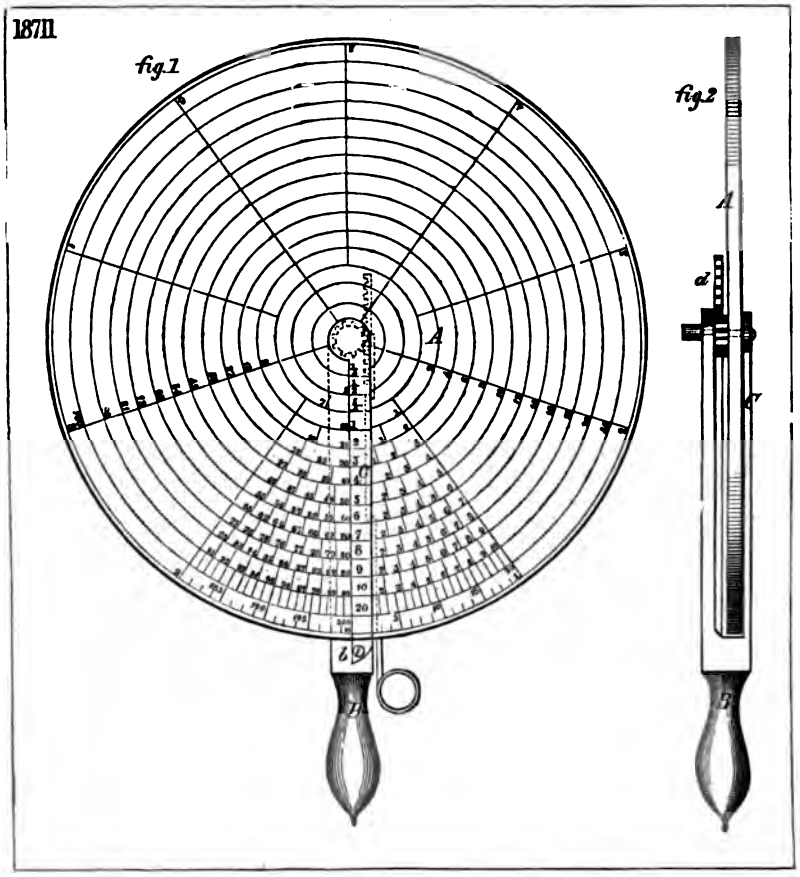
18711
fig.1
fig.2

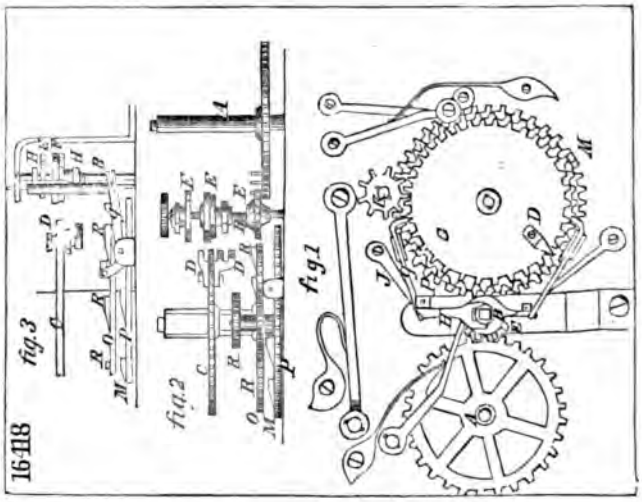
16418
fig.3
fig.2
fig.1

8

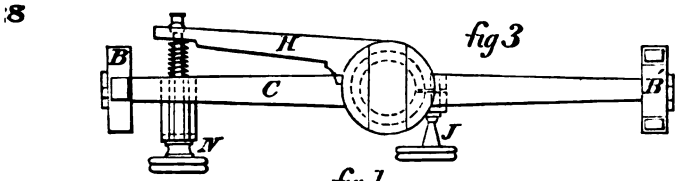

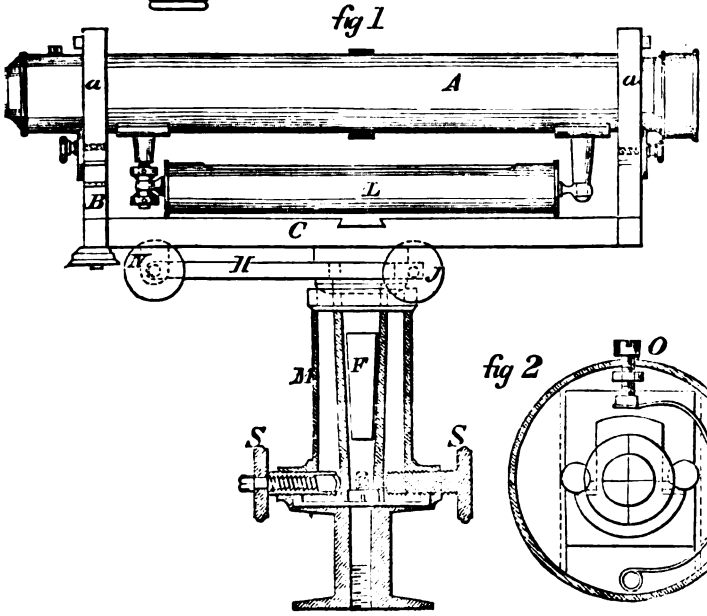

18327

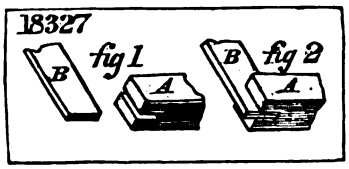

17991

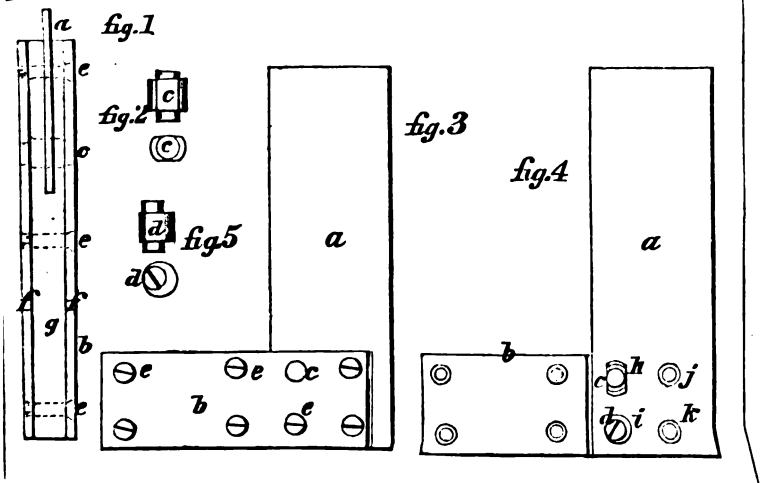

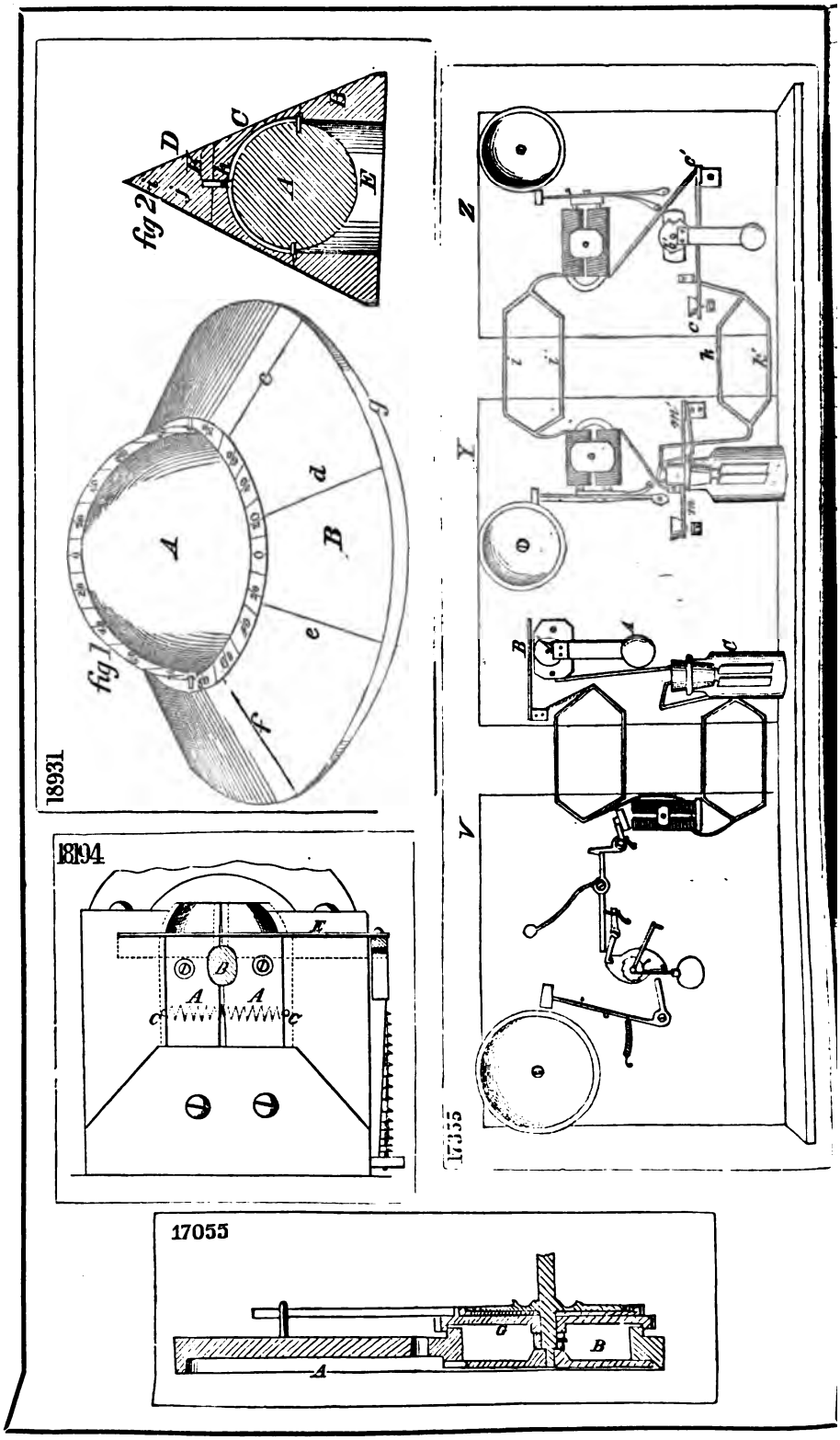
fig 2
fig 1
18931
18194
17055
17055

3608

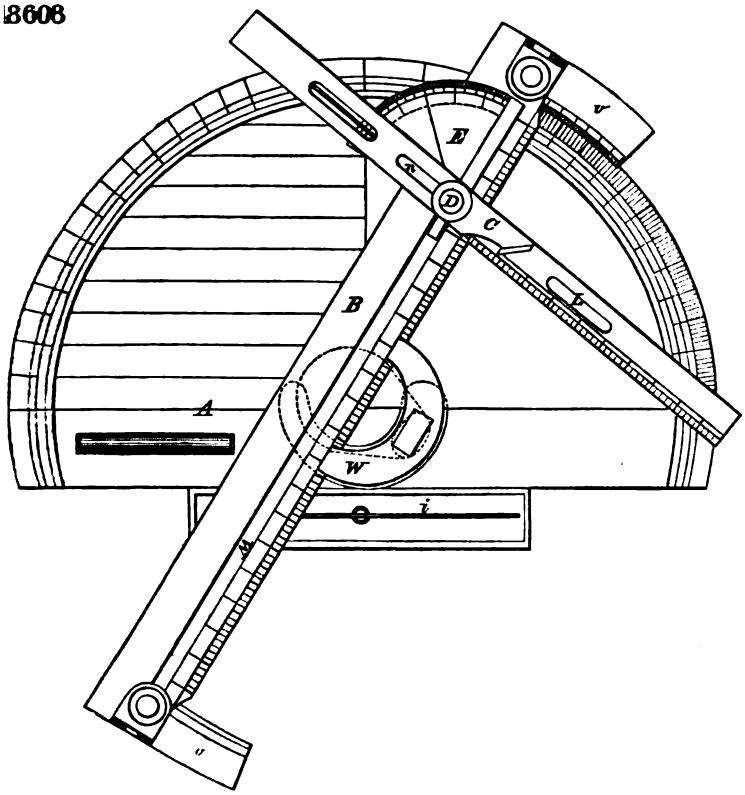

17023

fig.1

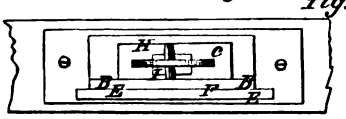

fig.2

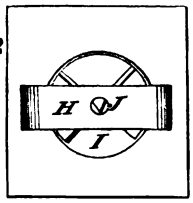

fig.3

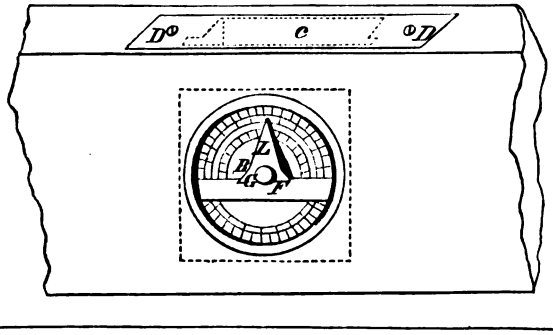

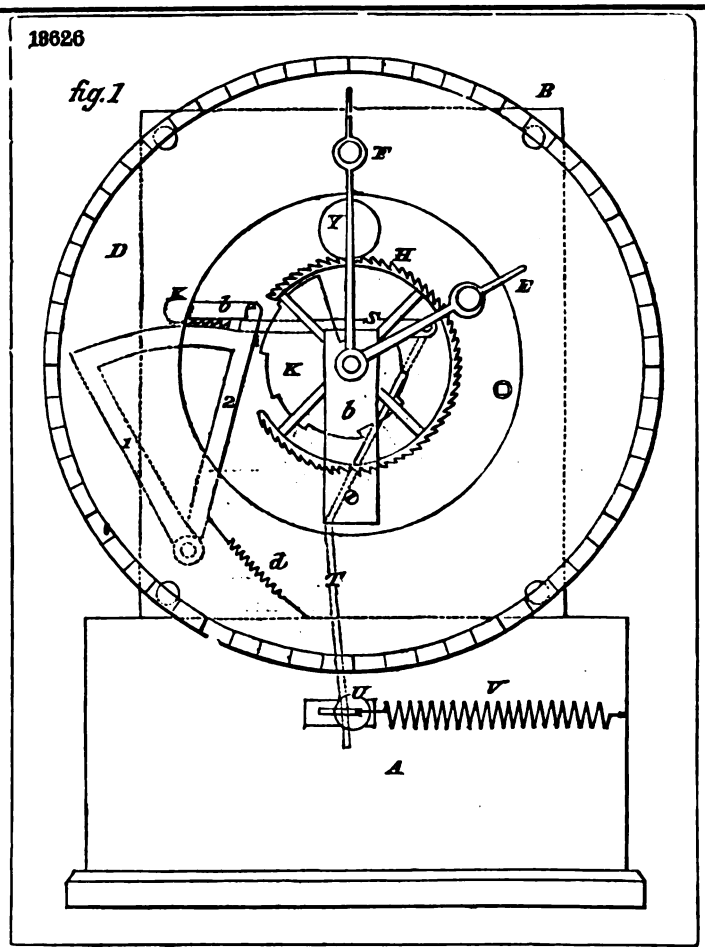
18626
fig.1
B
F
Y
H
D
E
K
b
S
K
b
2
1
d
T
U
V
A

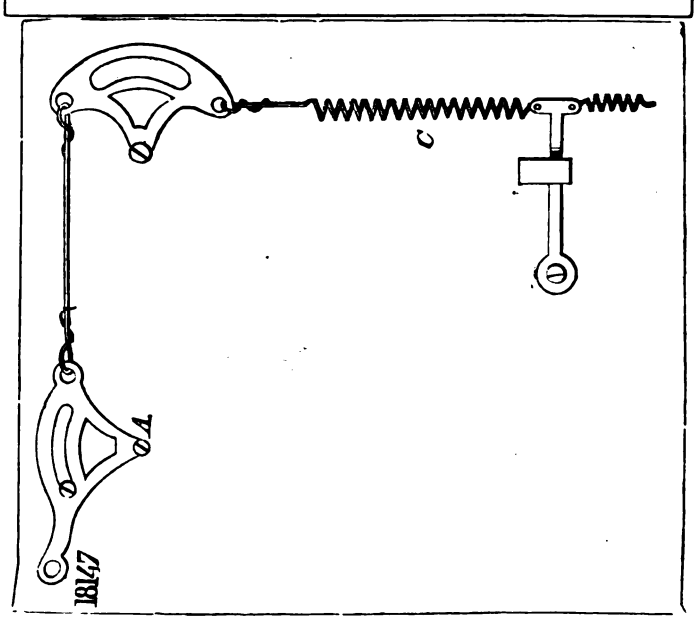
C
A
18147

26

fig 2

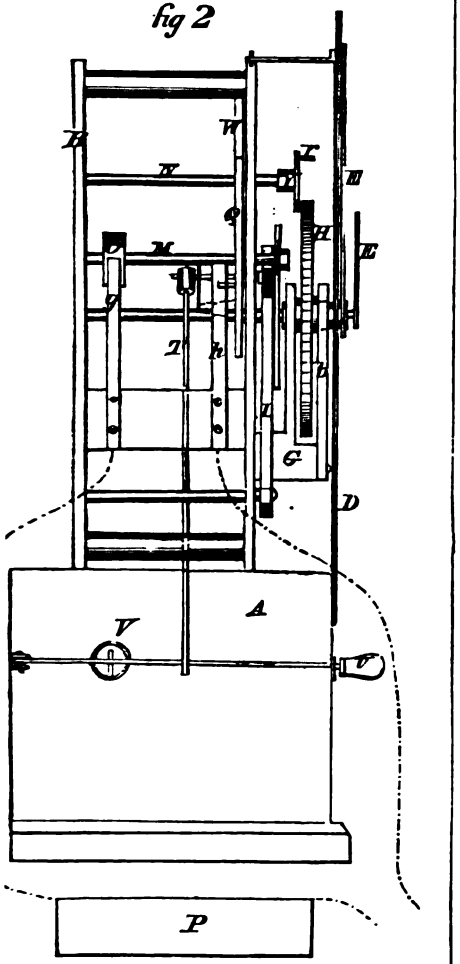

18572

fig 1

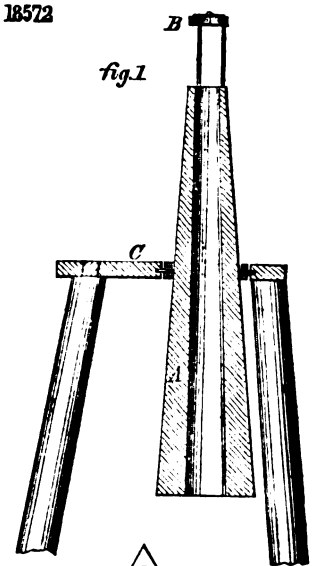

fig. 2

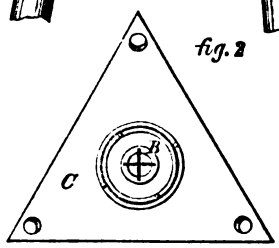

17870

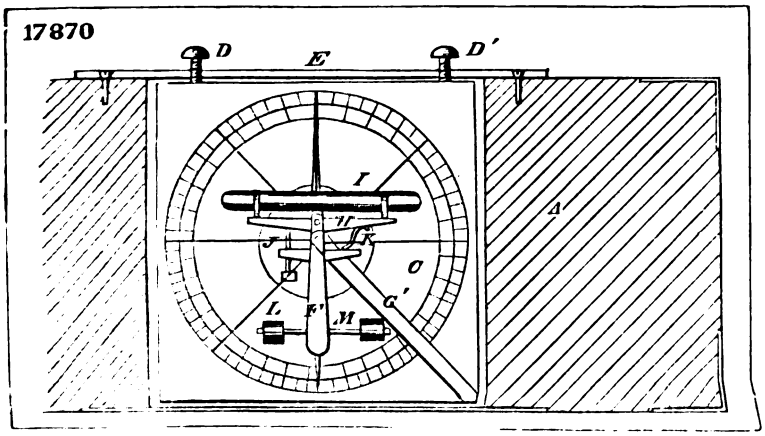

18022

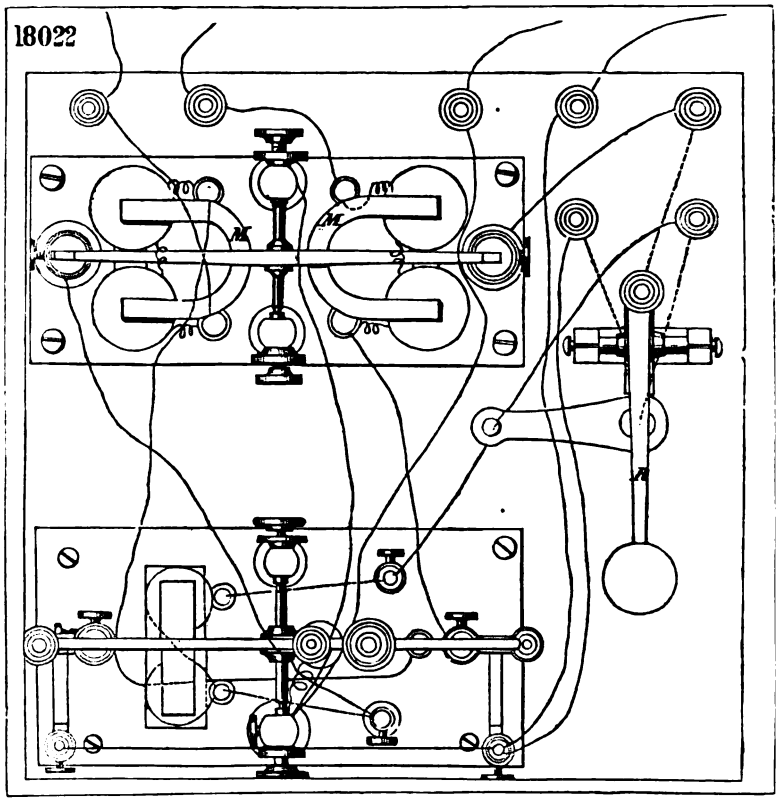

16344

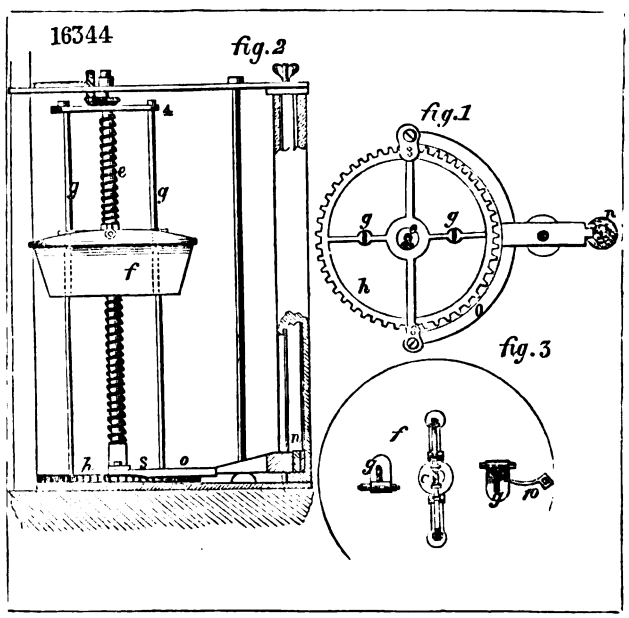

328

fig 1

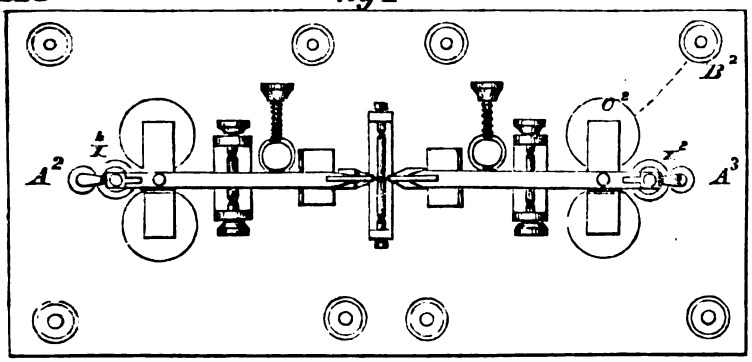

fig 2

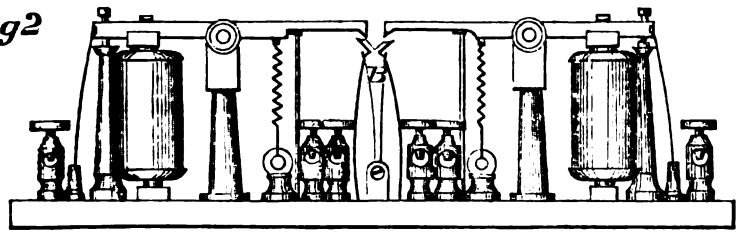

fig 3

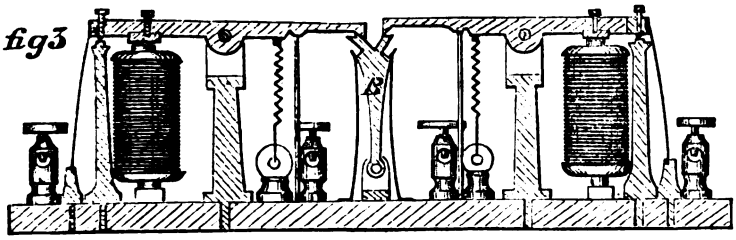

11673

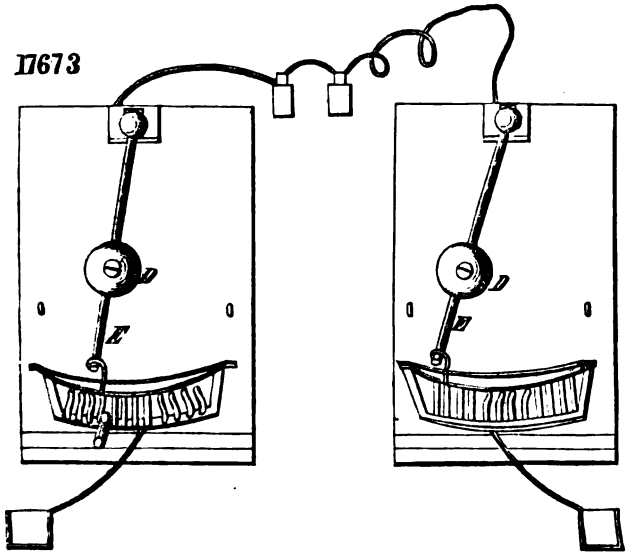

18149

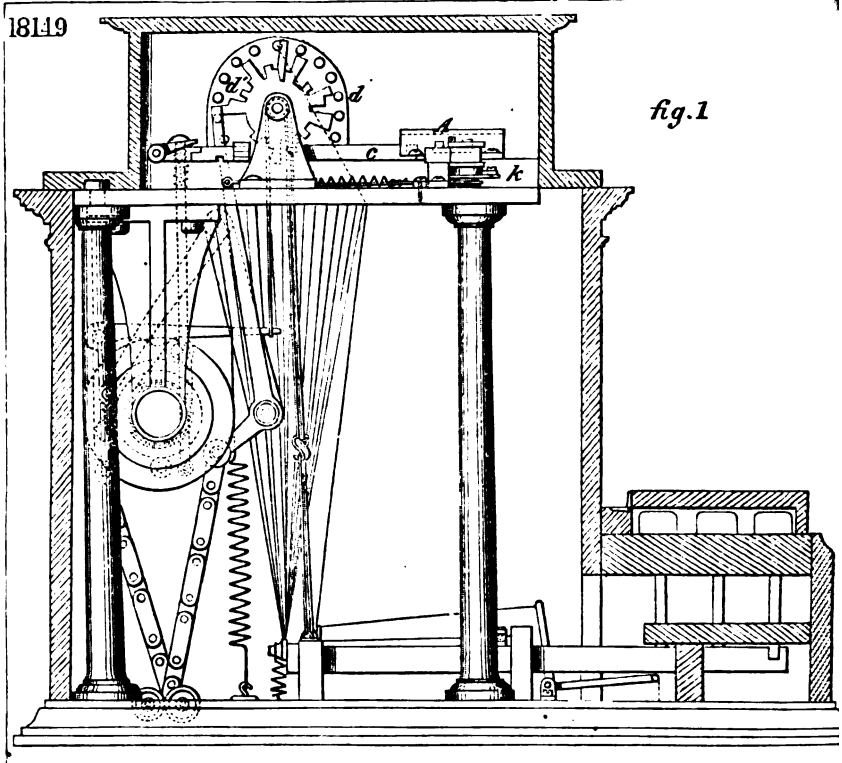

fig. 1

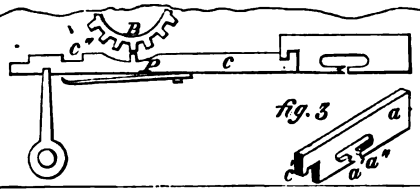

fig. 2

fig. 3

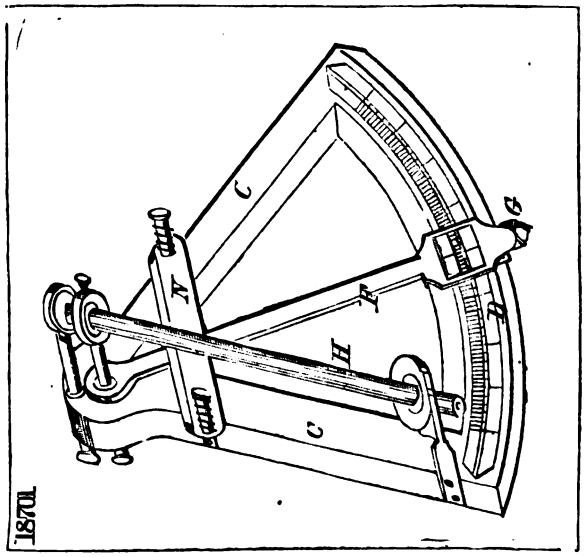

18701

31

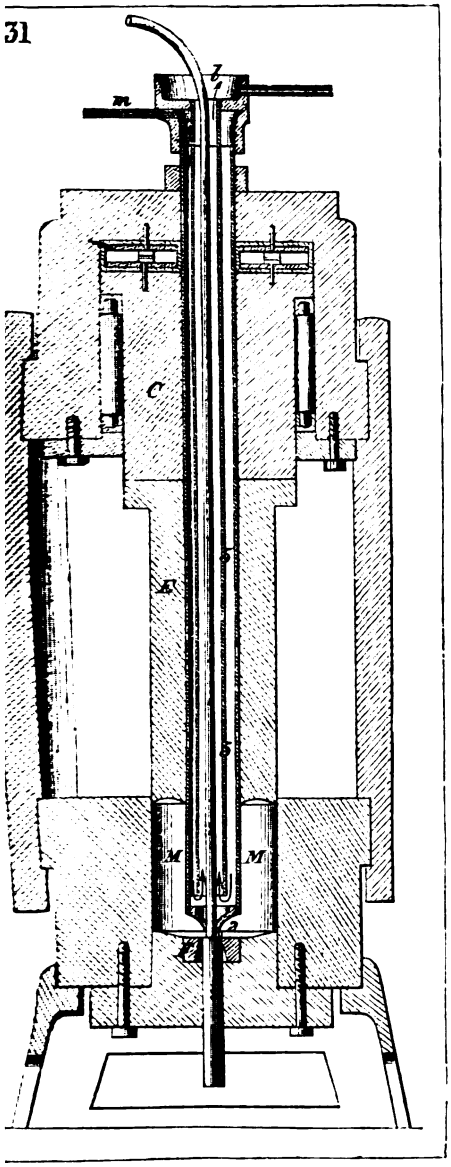

359 fig 1 fig 2

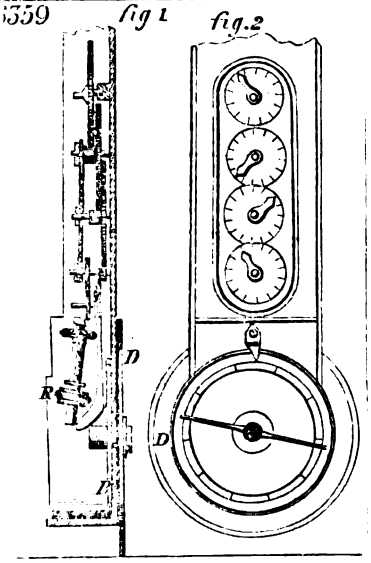

17253

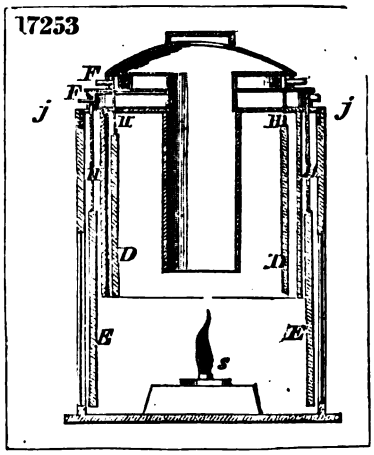

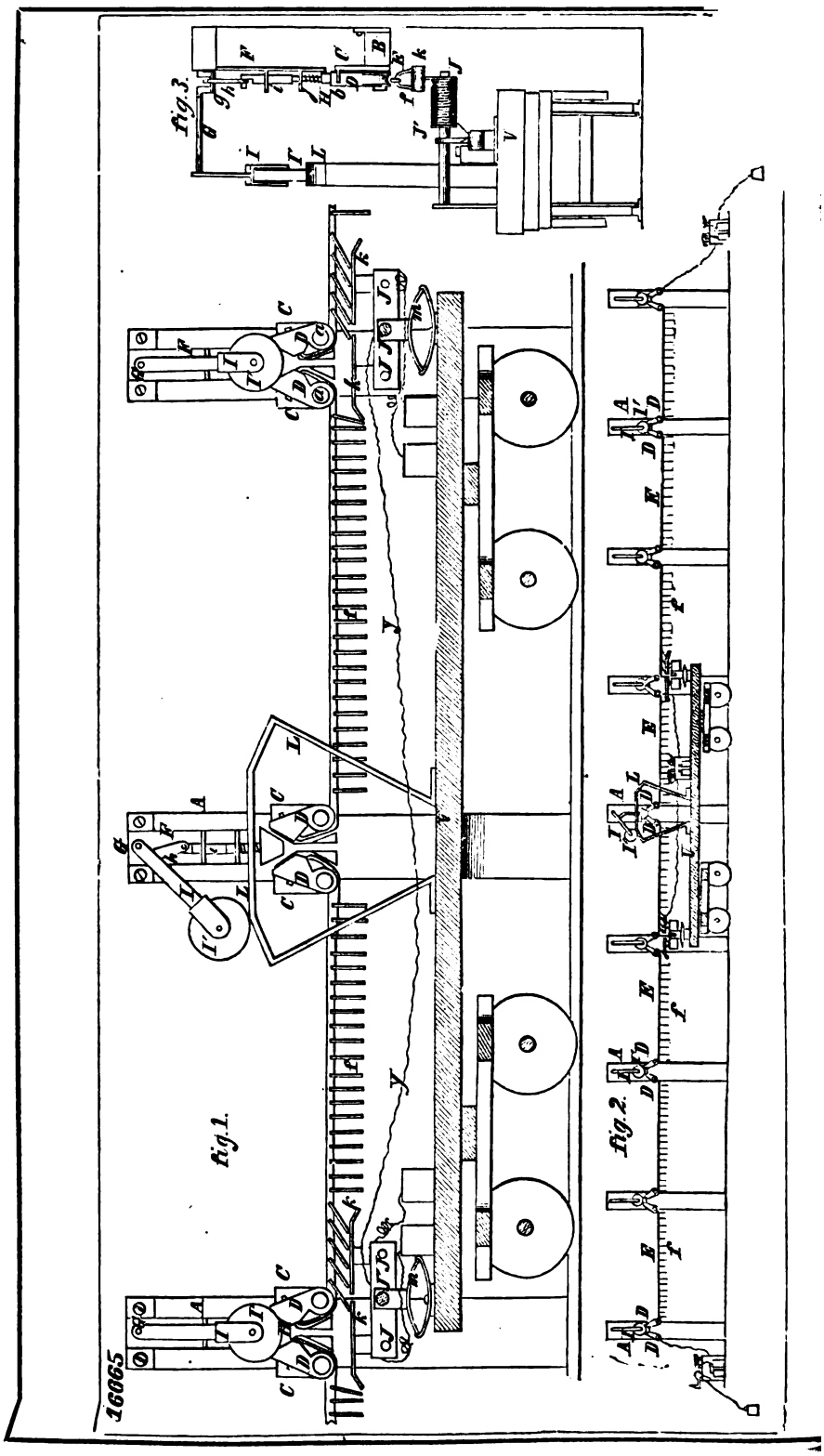
fig.3.
fig.1.
fig.2.
16065

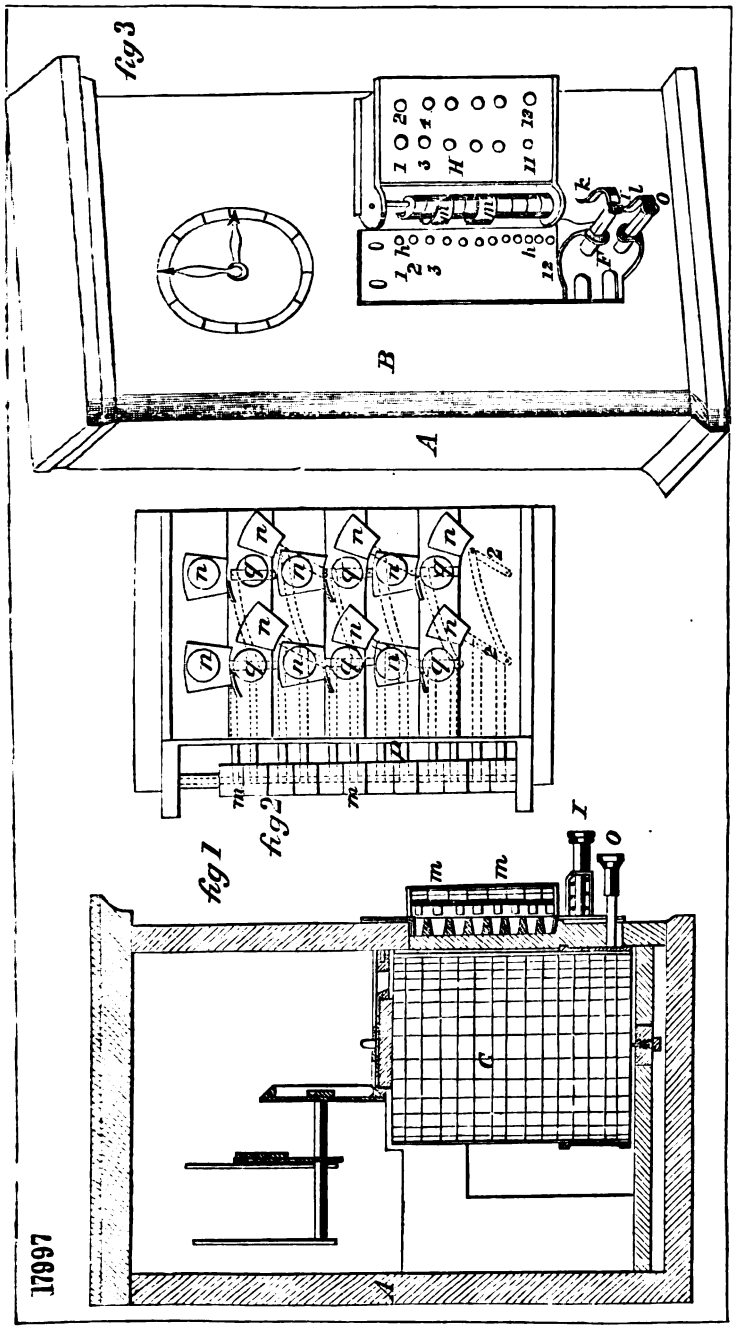
fig 3
A
B
fig 2
fig 1
C
17997

17256

fig.1

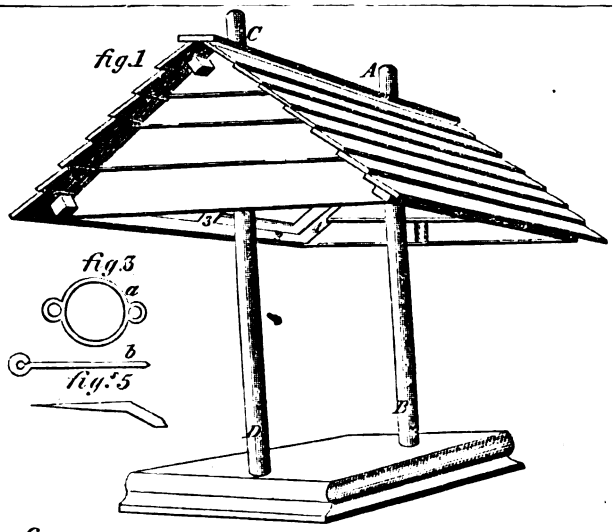

fig.4

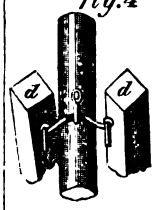

fig.3

fig.5

fig.2

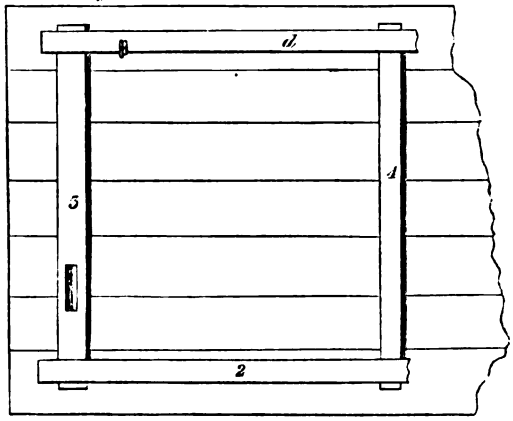

17062

fig1

fig2

fig3

ad18253

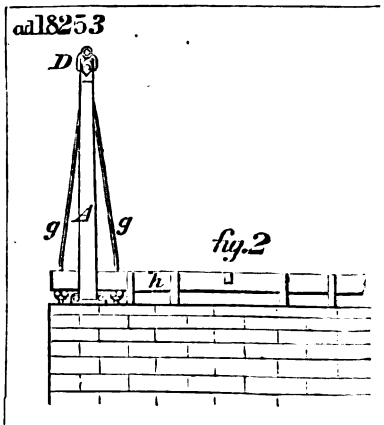

fig.2

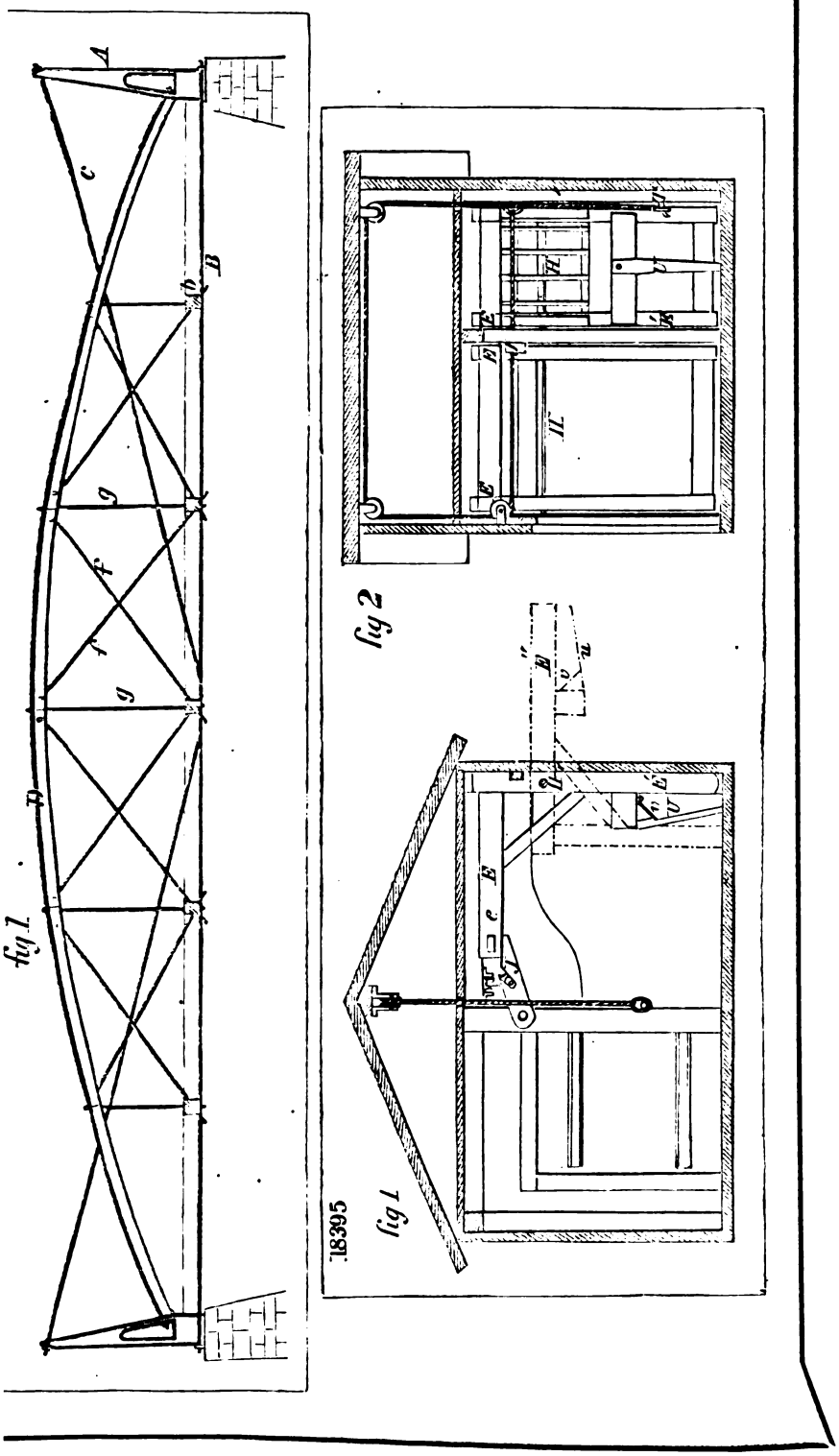
fig 1
fig 2
fig 1
18395

18037

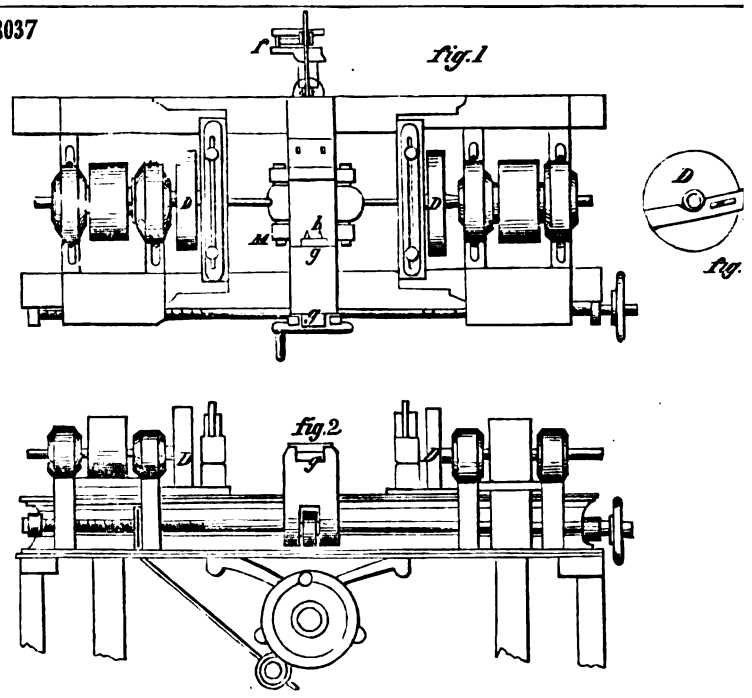

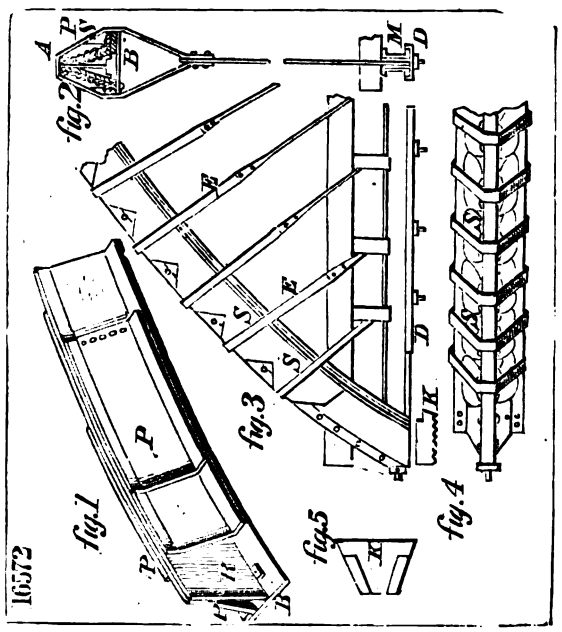

16473

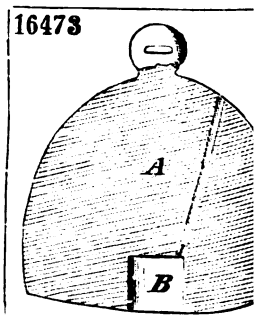

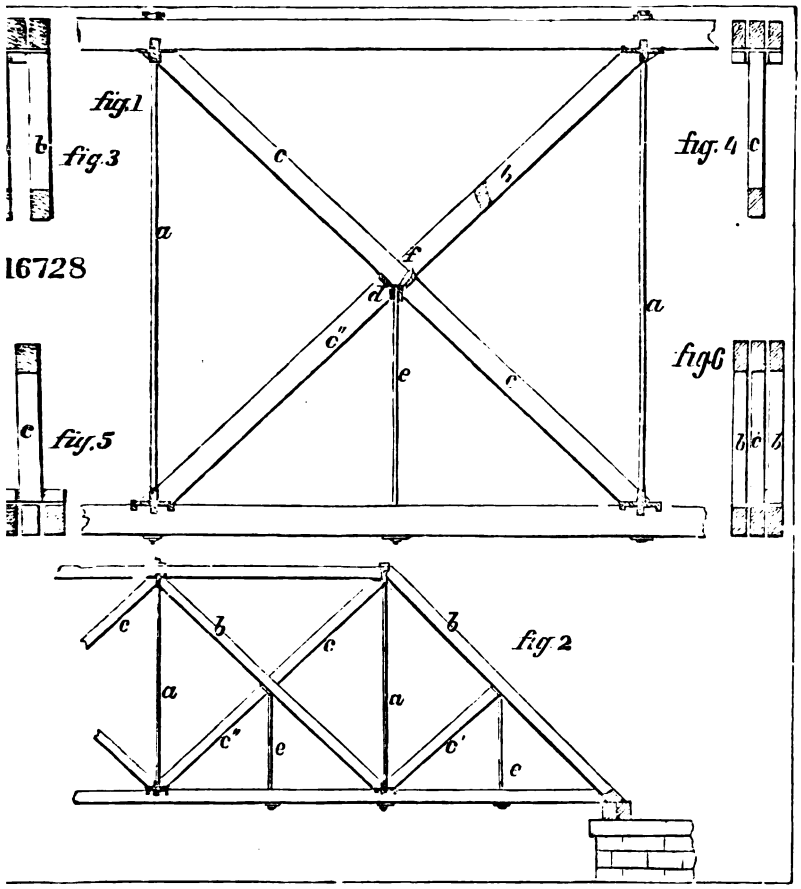
fig.1
fig.3
fig.4
fig.5
fig.6
fig.2
16728
a
b
c
c'
c''
d
e
F

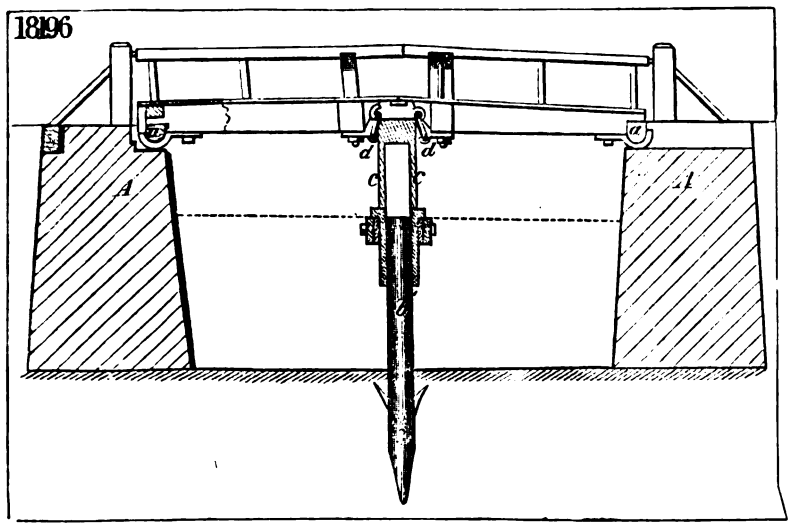
1896
A
B
C
d
e

17722 fig. 1

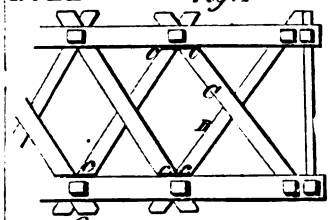

fig. 2

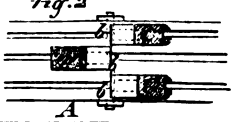

17684 fig. 1

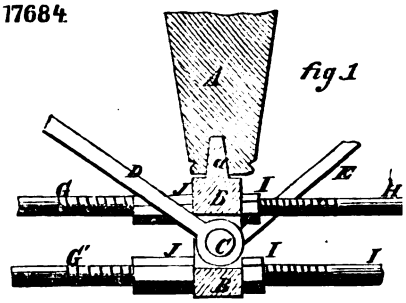

fig. 2

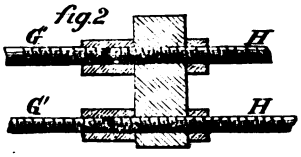

17864

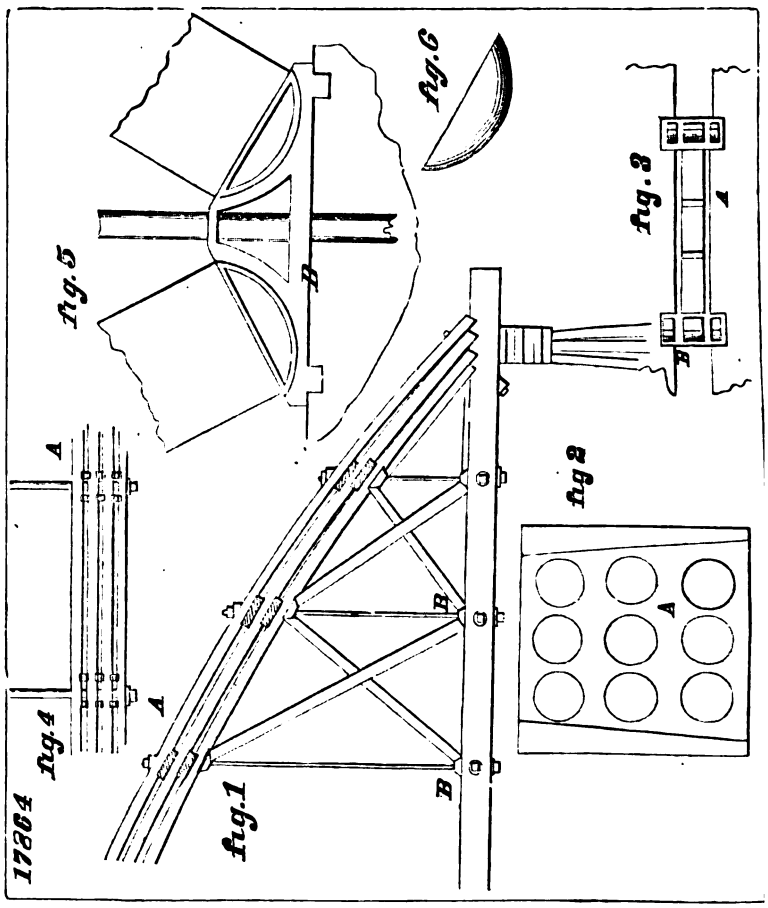

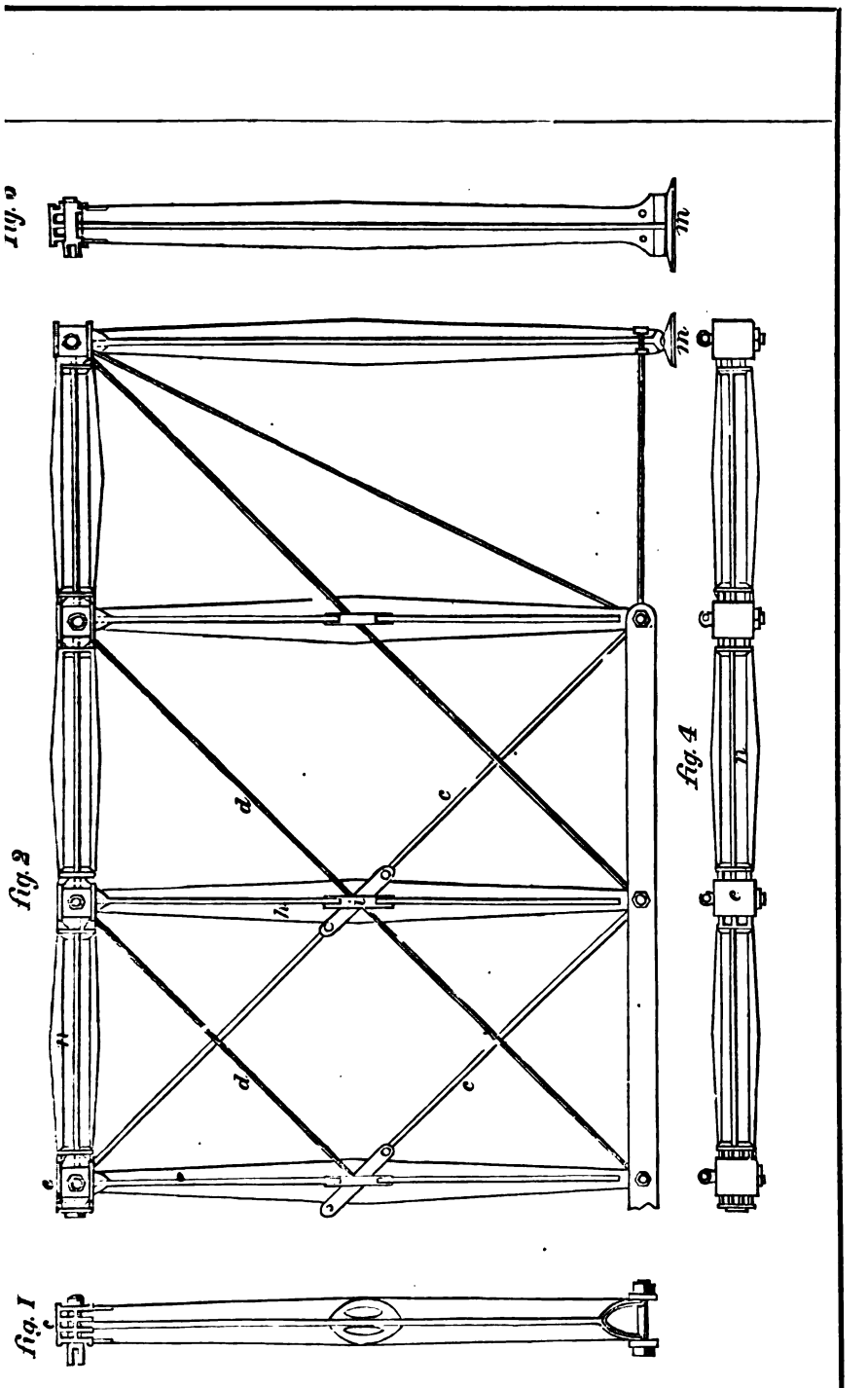
fig. 1
fig. 2
fig. 4
fig. 5
m
n
e
d
c
h
i

16446

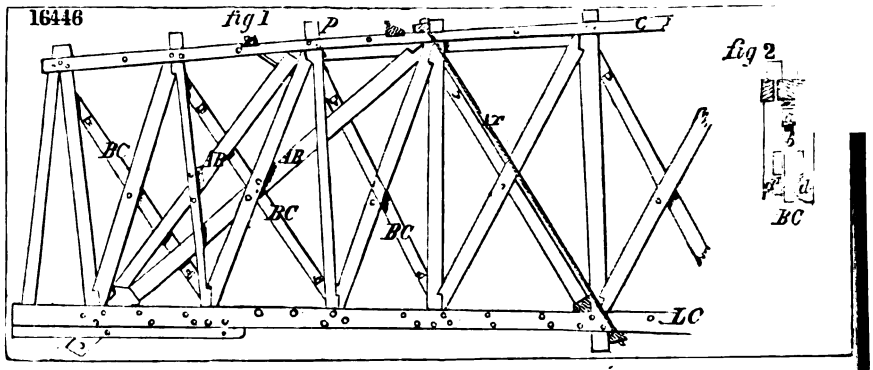

18550

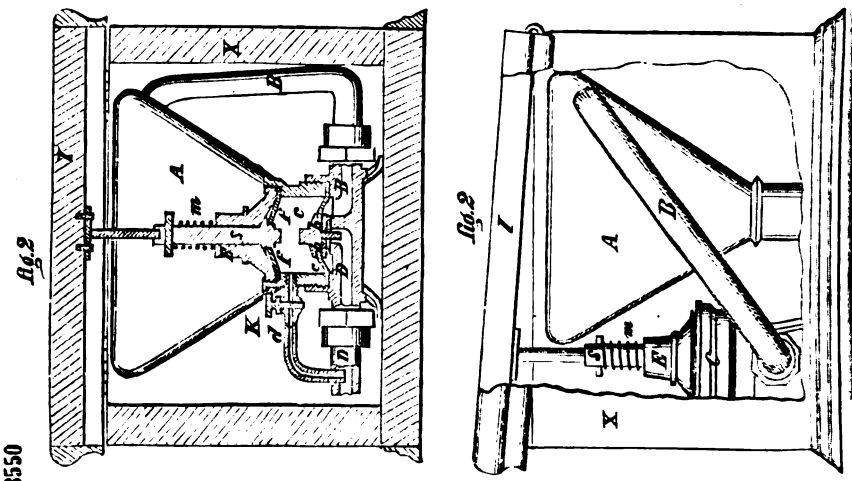

18972

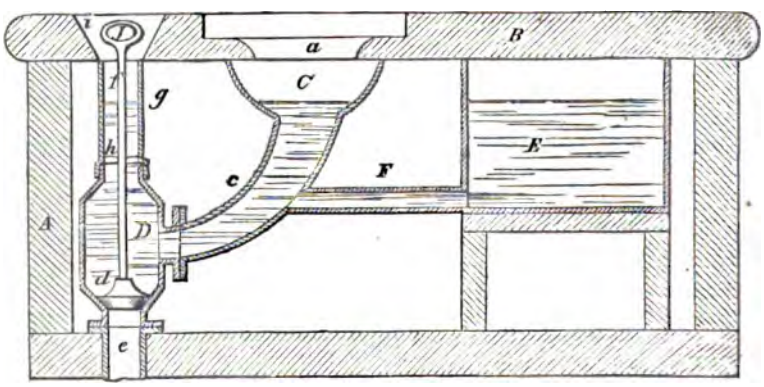

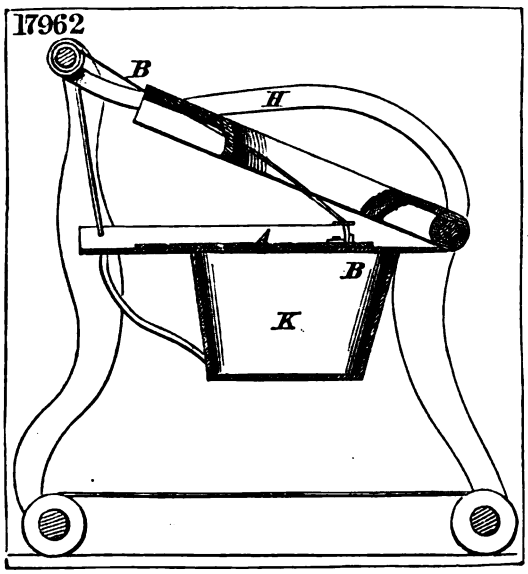
17962
B
H
A
B
K

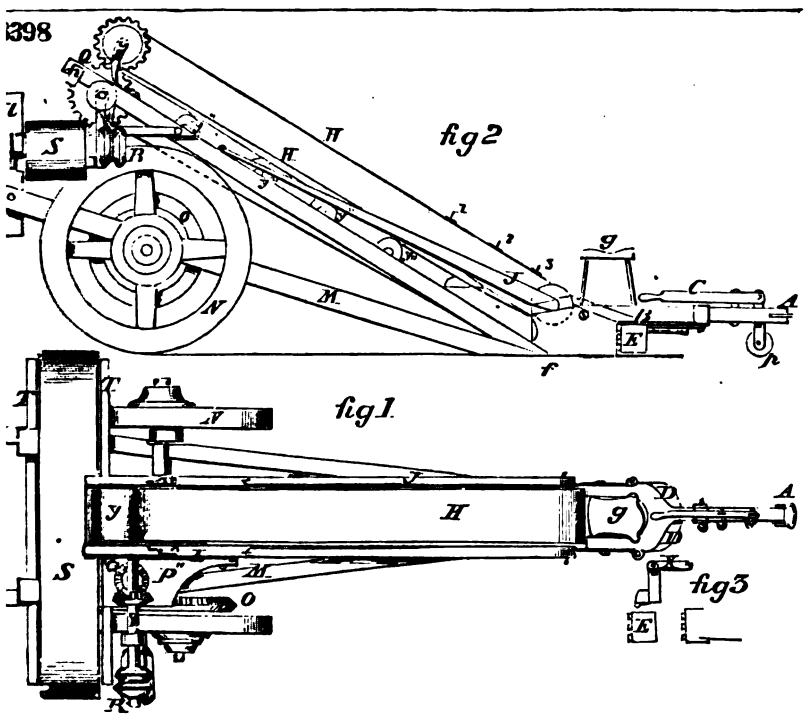
398
fig2
fig1
fig3
S
H
M
N
g
C
A
E
f
p
T
y
P
O
R

18404

fig 1

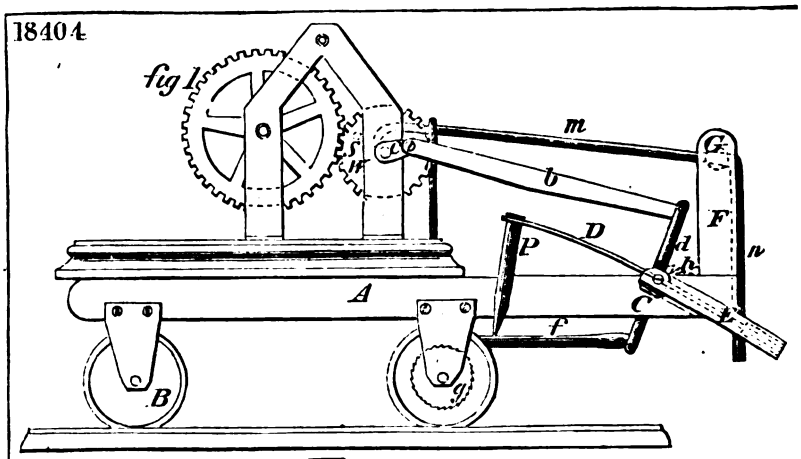

fig 2

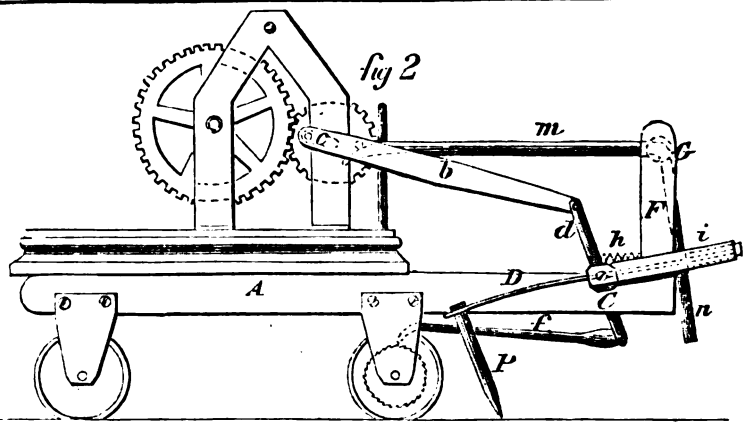

fig 3

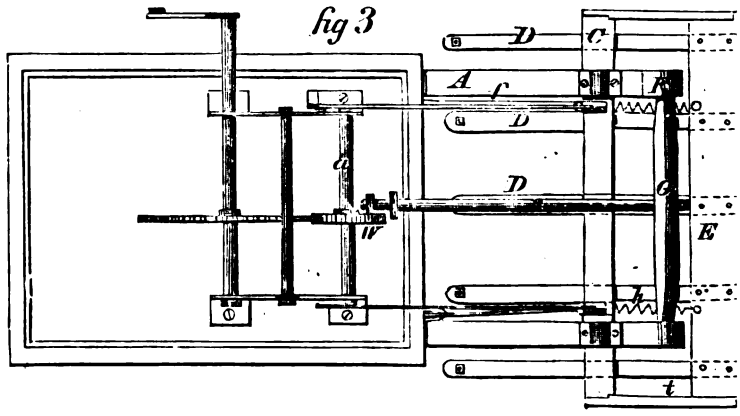

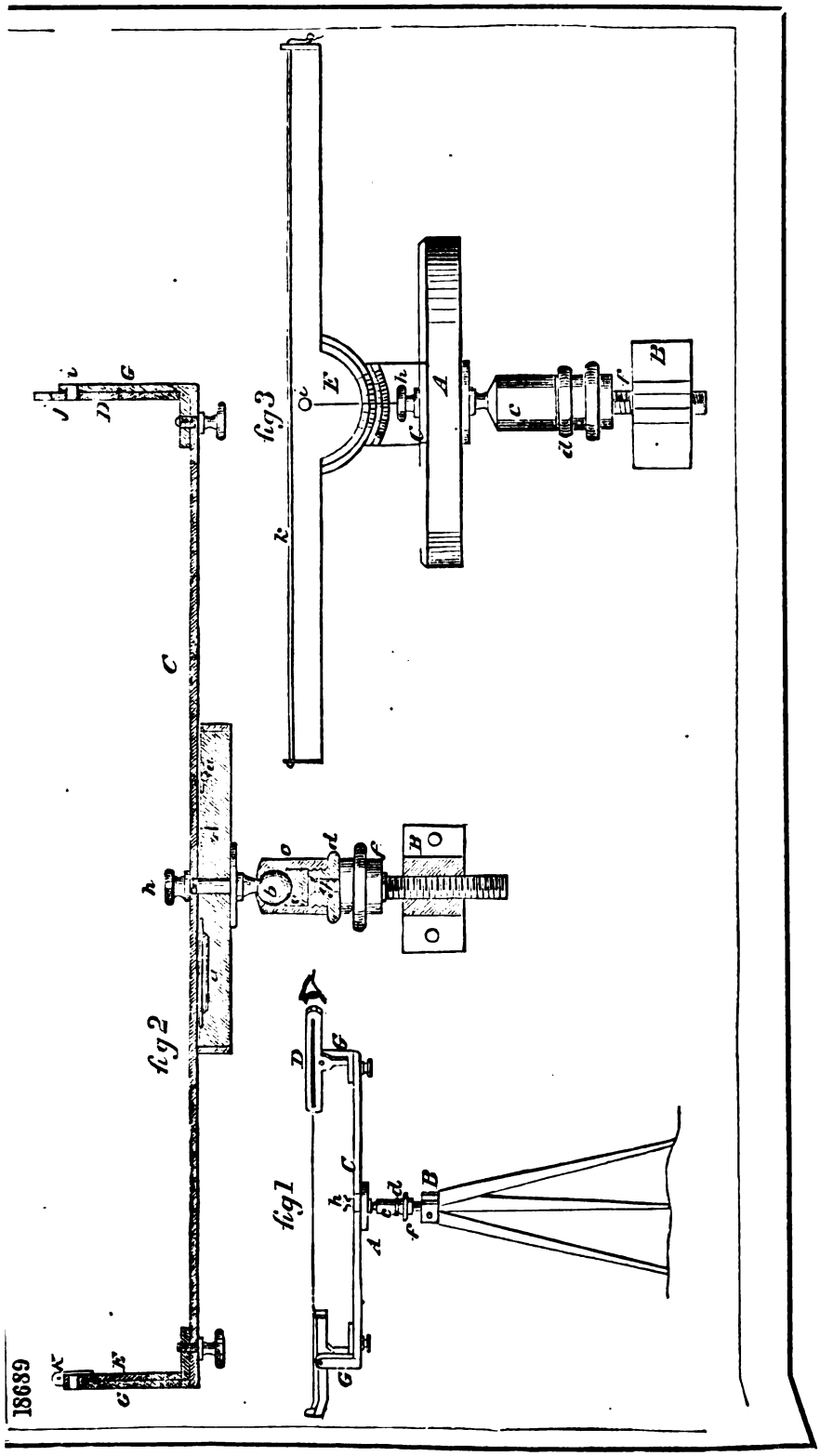
fig 1
fig 2
fig 3
18689

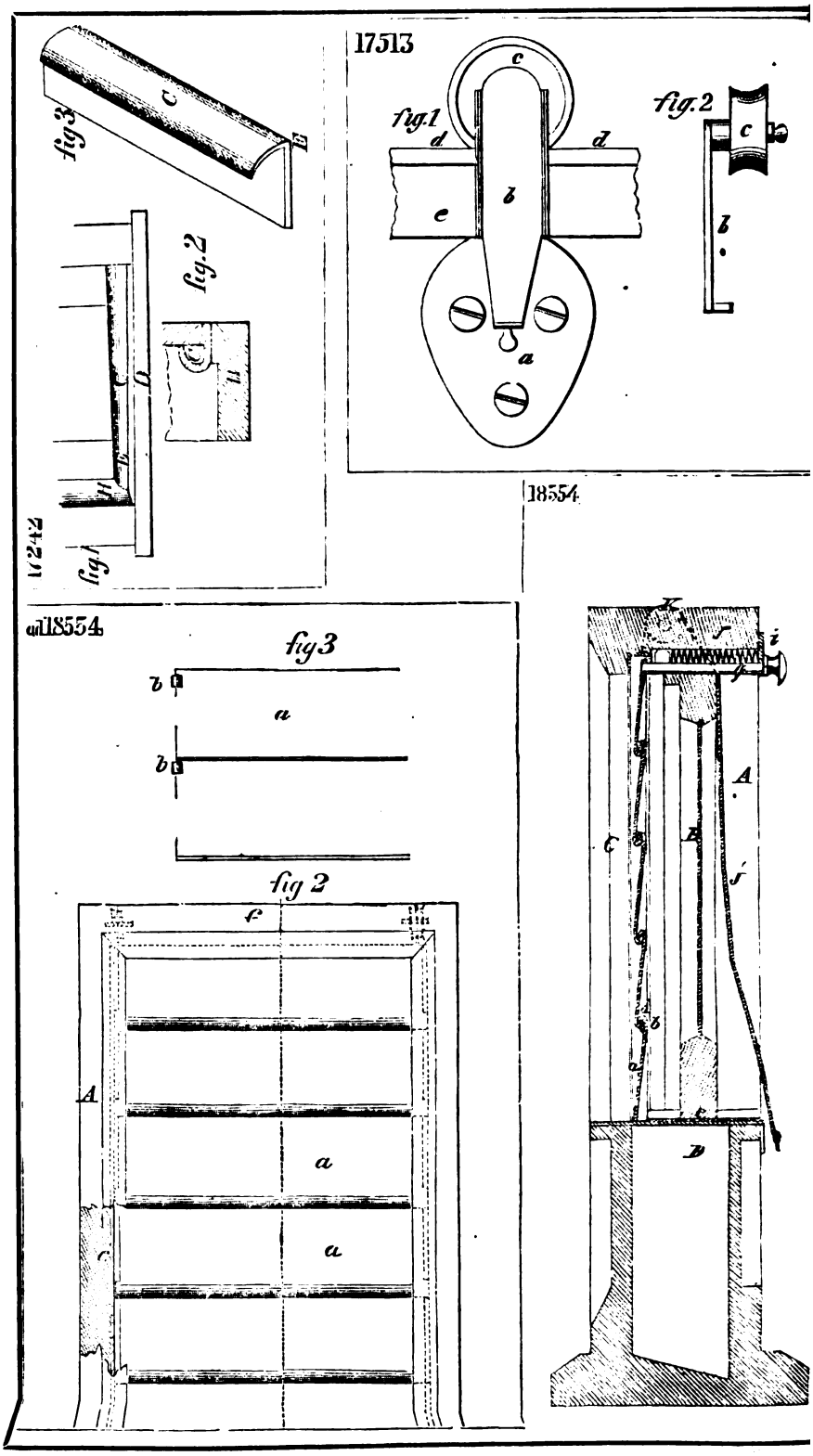
17513
fig.1
fig.2
fig.3
17242
18554
18554
fig 3
fig 2

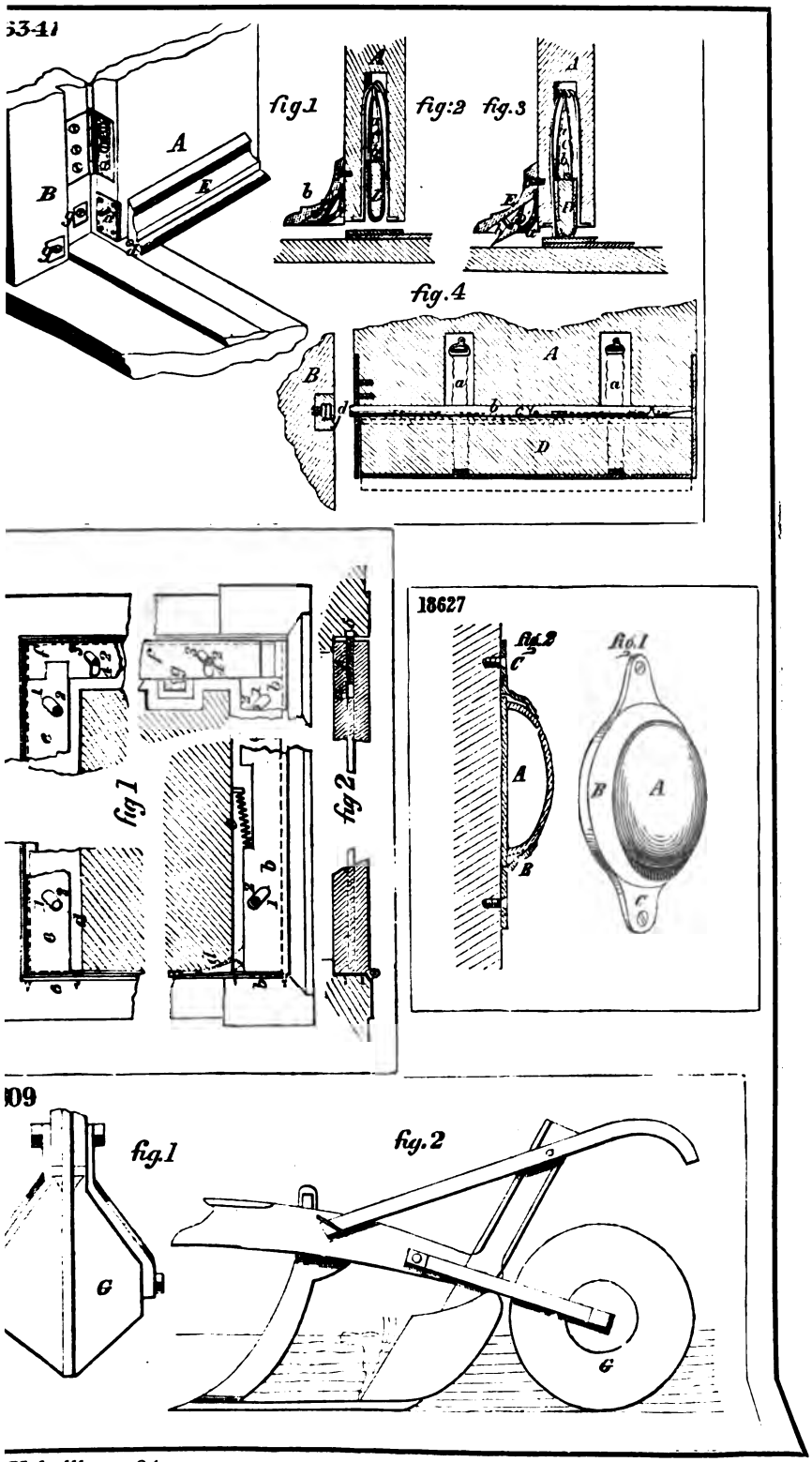
fig.1
fig:2
fig.3
fig.4
A
B
E
D
a
b
d
fig 1
fig 2
18627
fig.2
fig.1
C
A
B
fig.1
fig.2
G

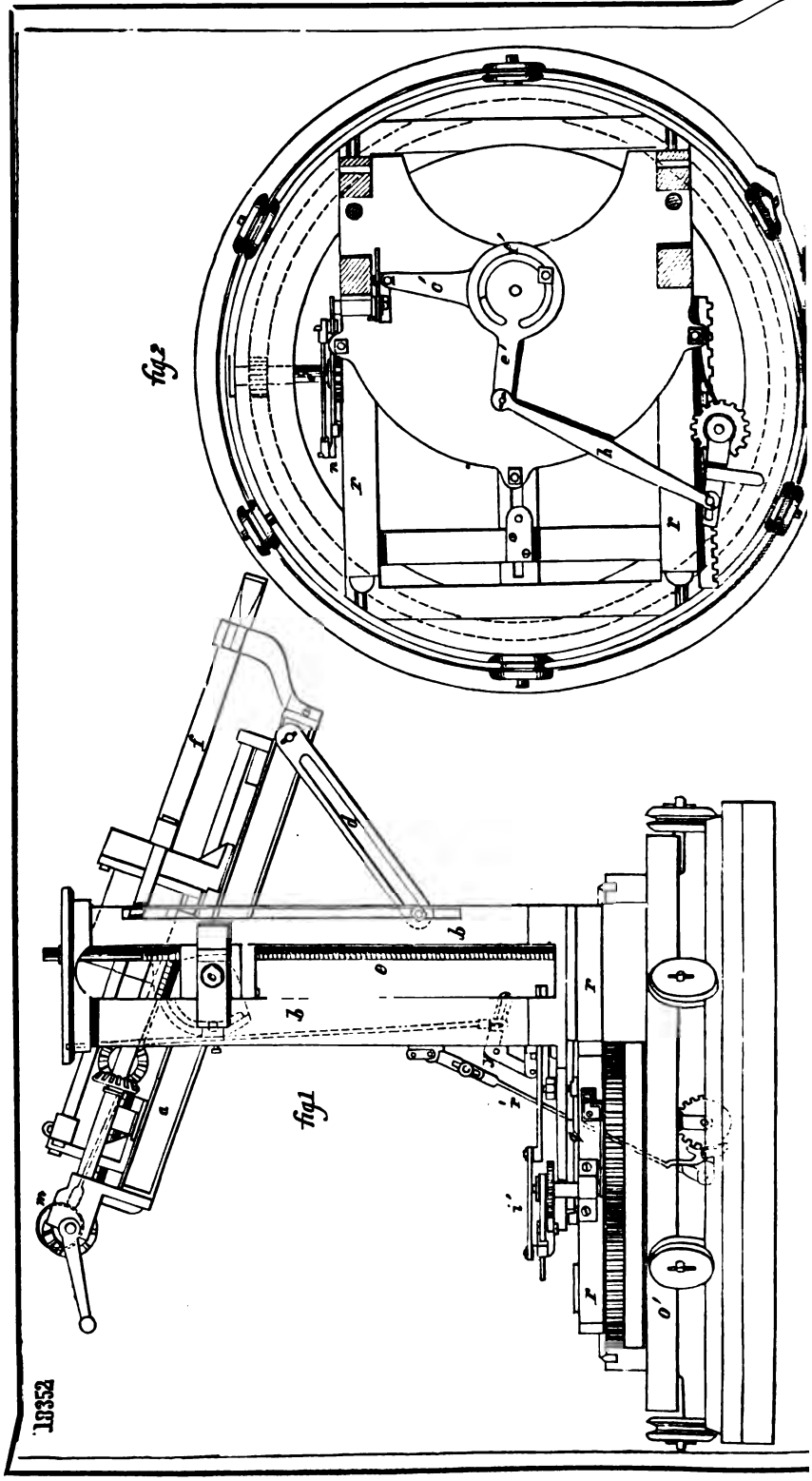
fig 2
fig 1
18352

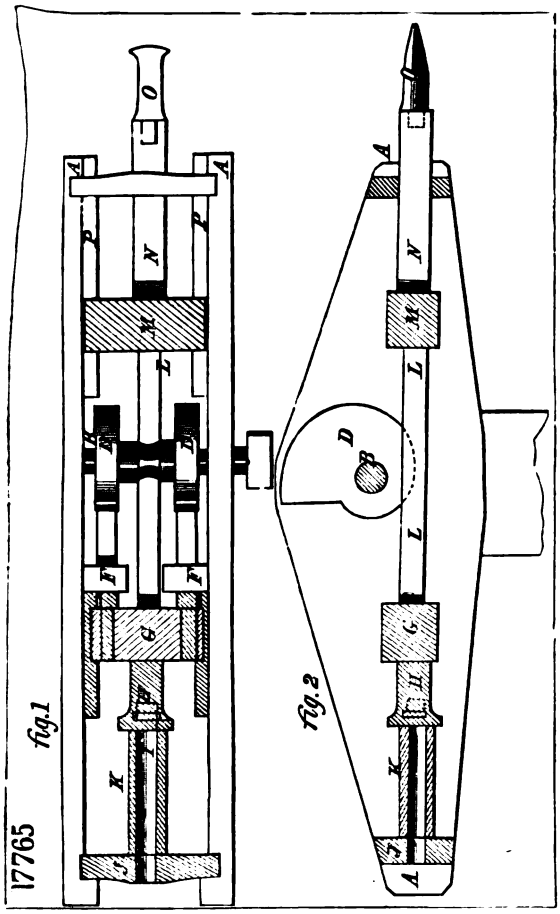
17765
fig.1
fig.2

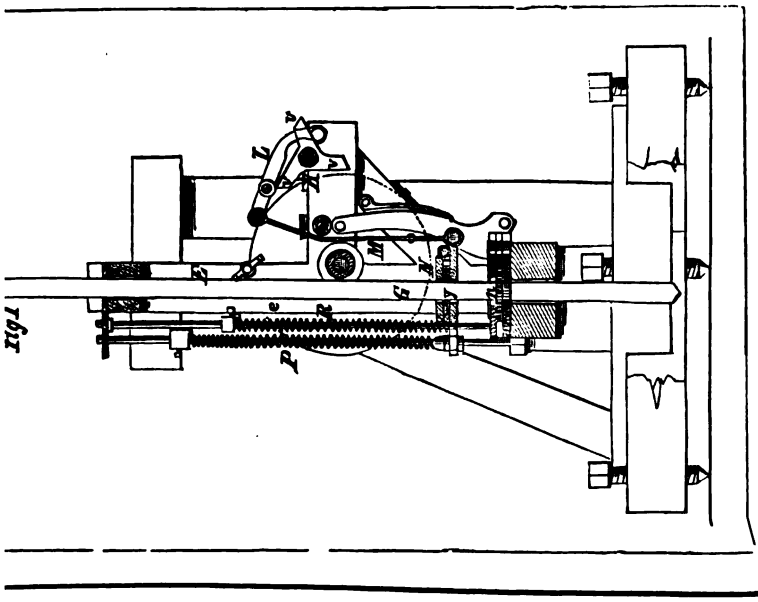
fig1

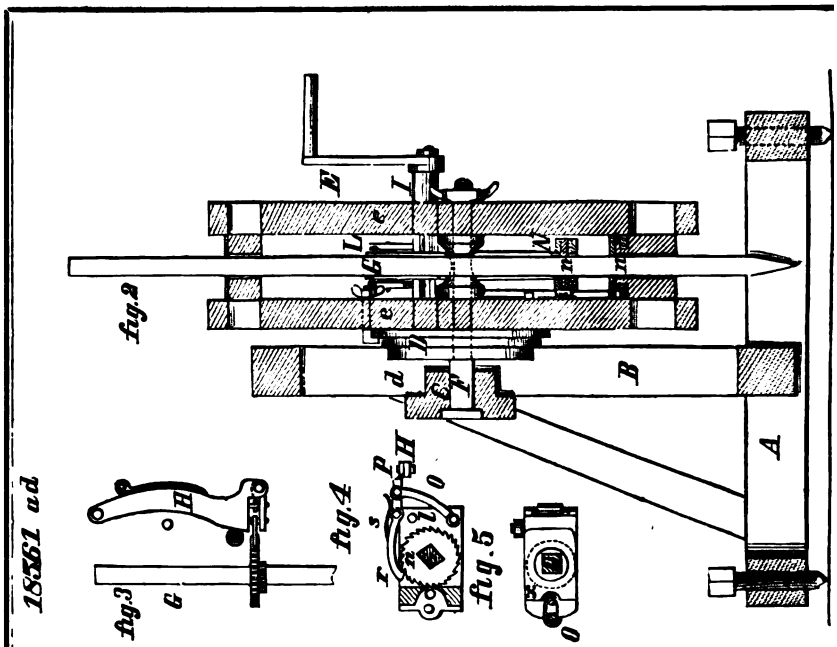
18561 ad
fig.2
fig.3
fig.4
fig.5
A
B
E
I
L
G
H
G
d
e
f
p
s
r
o
n
l
O

17896

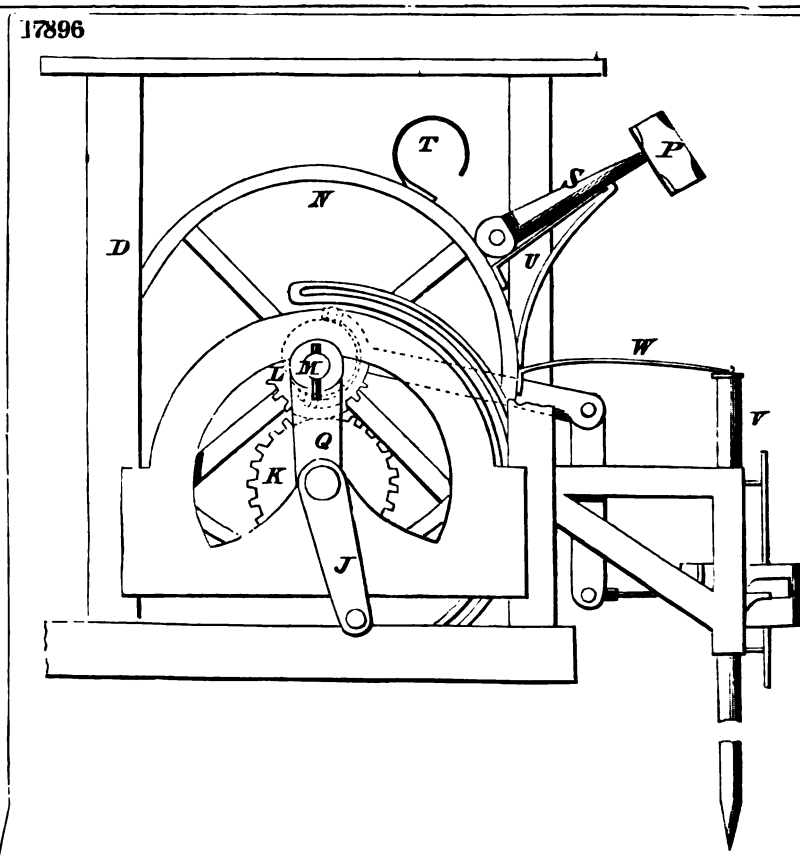
T
P
S
N
D
U
W
V
L
M
Q
K
J

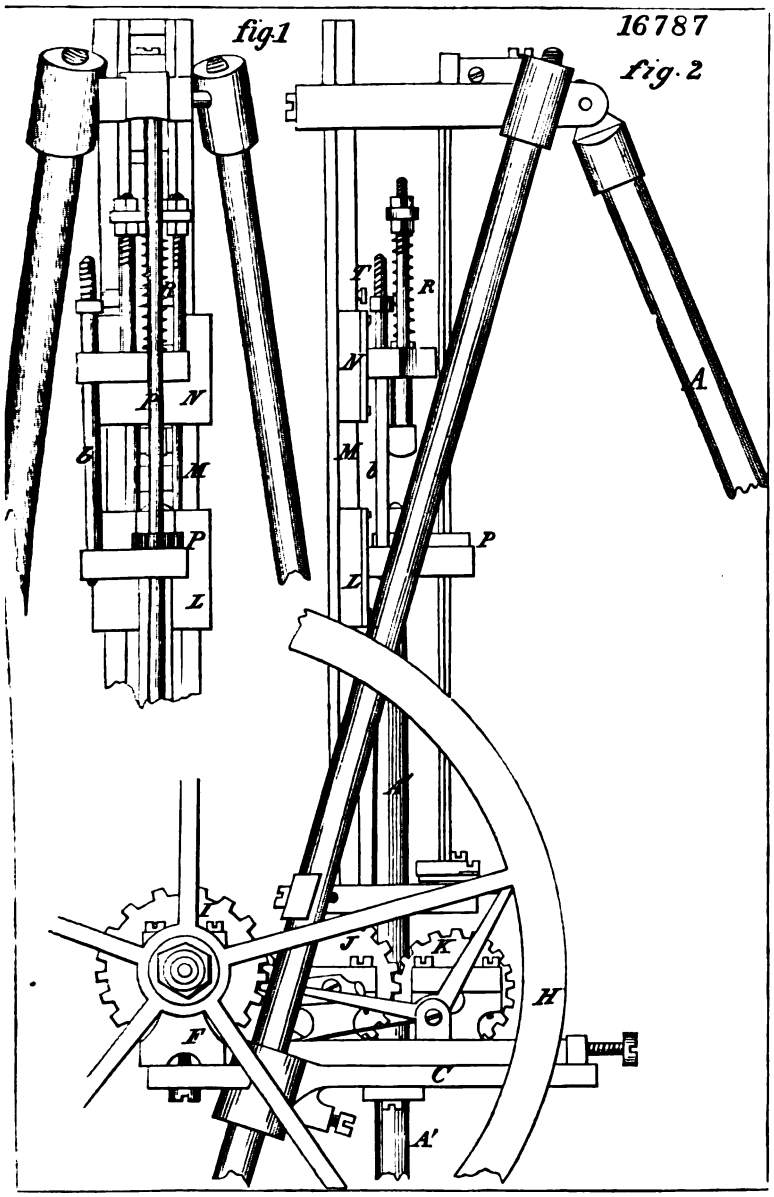
fig.1
16787
fig.2
R
N
M
P
L
T
A
A'
J
K
H
F
C

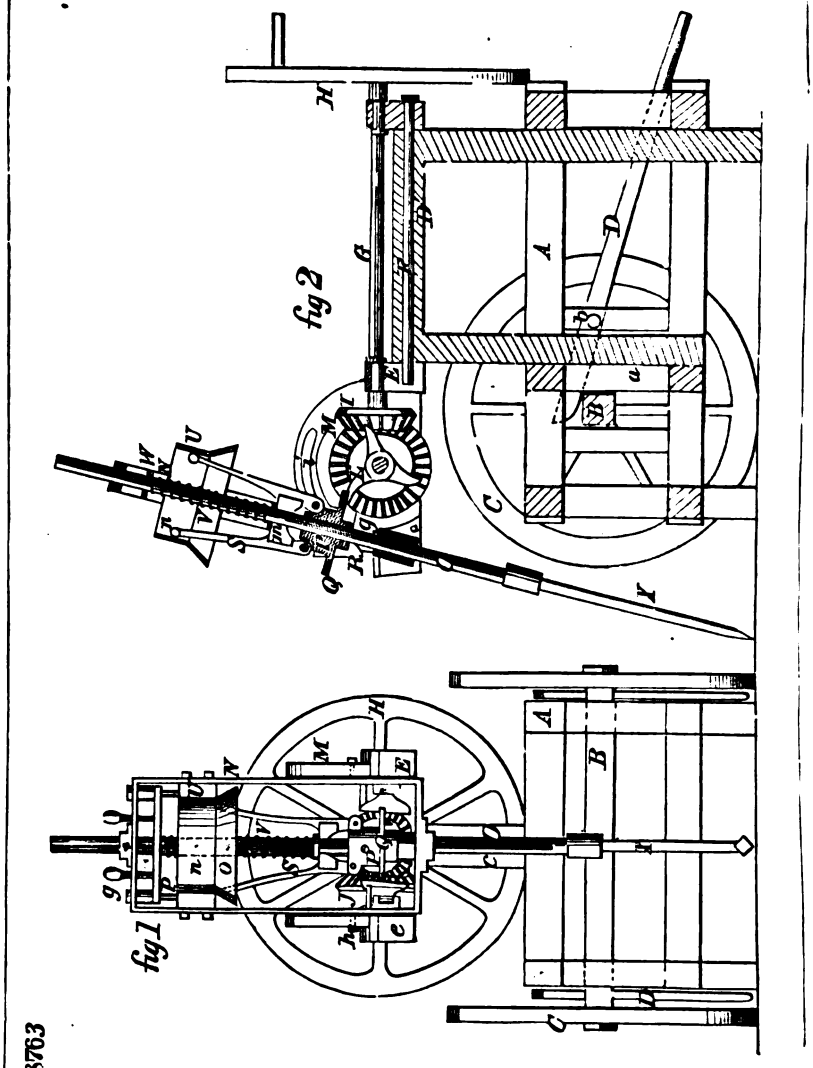
fig 2
fig 1
18763

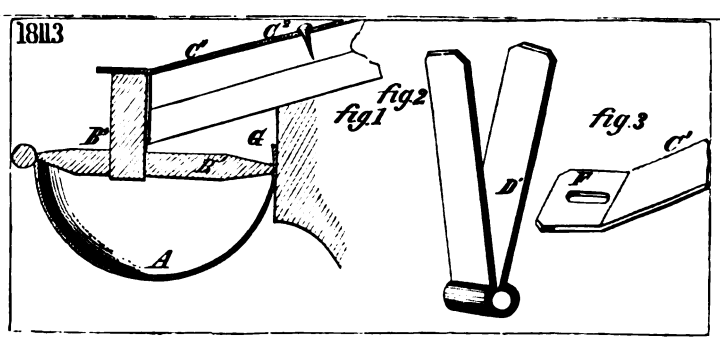
18113
fig 1
fig 2
fig 3

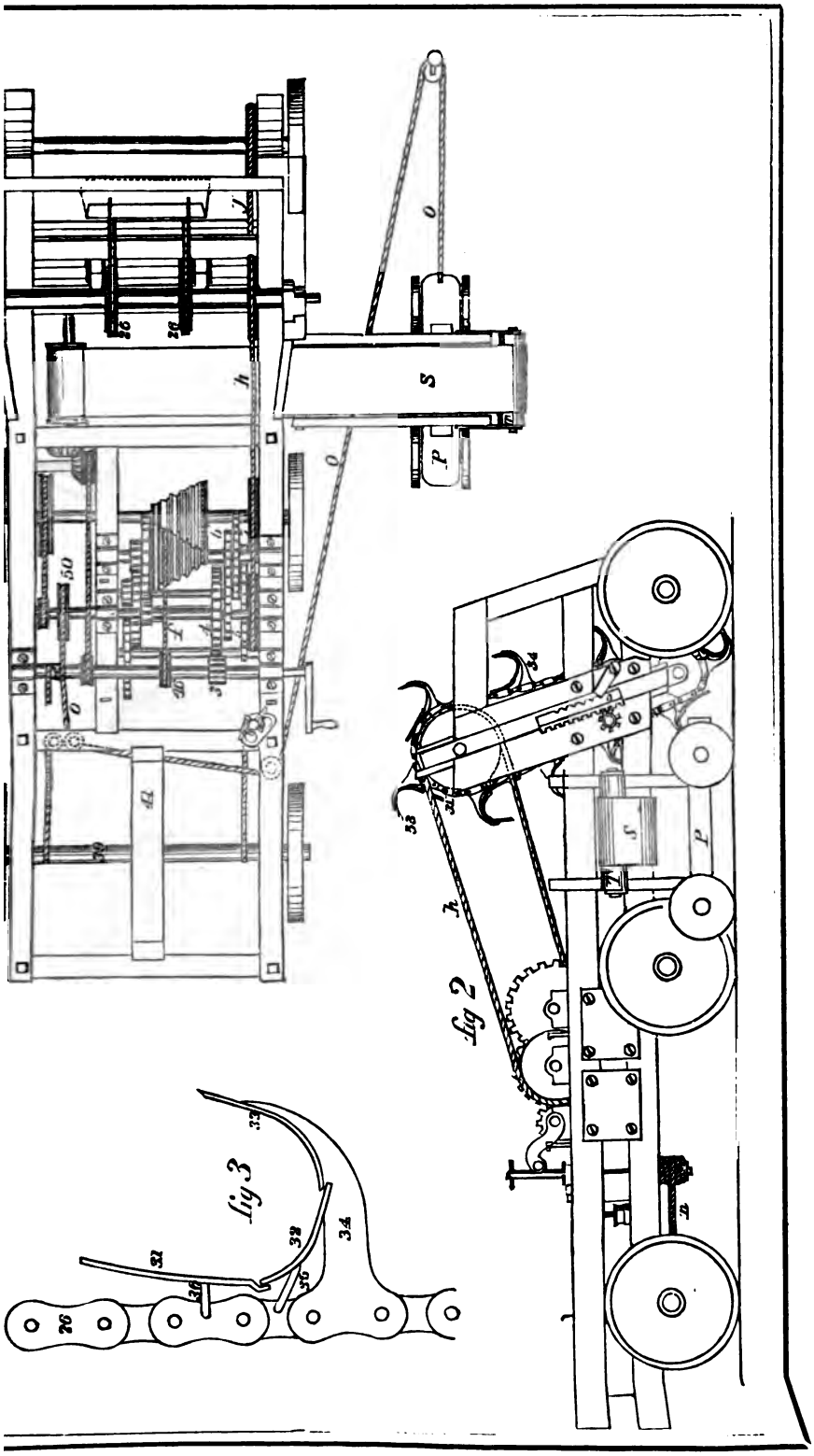
Fig 2
Fig 3

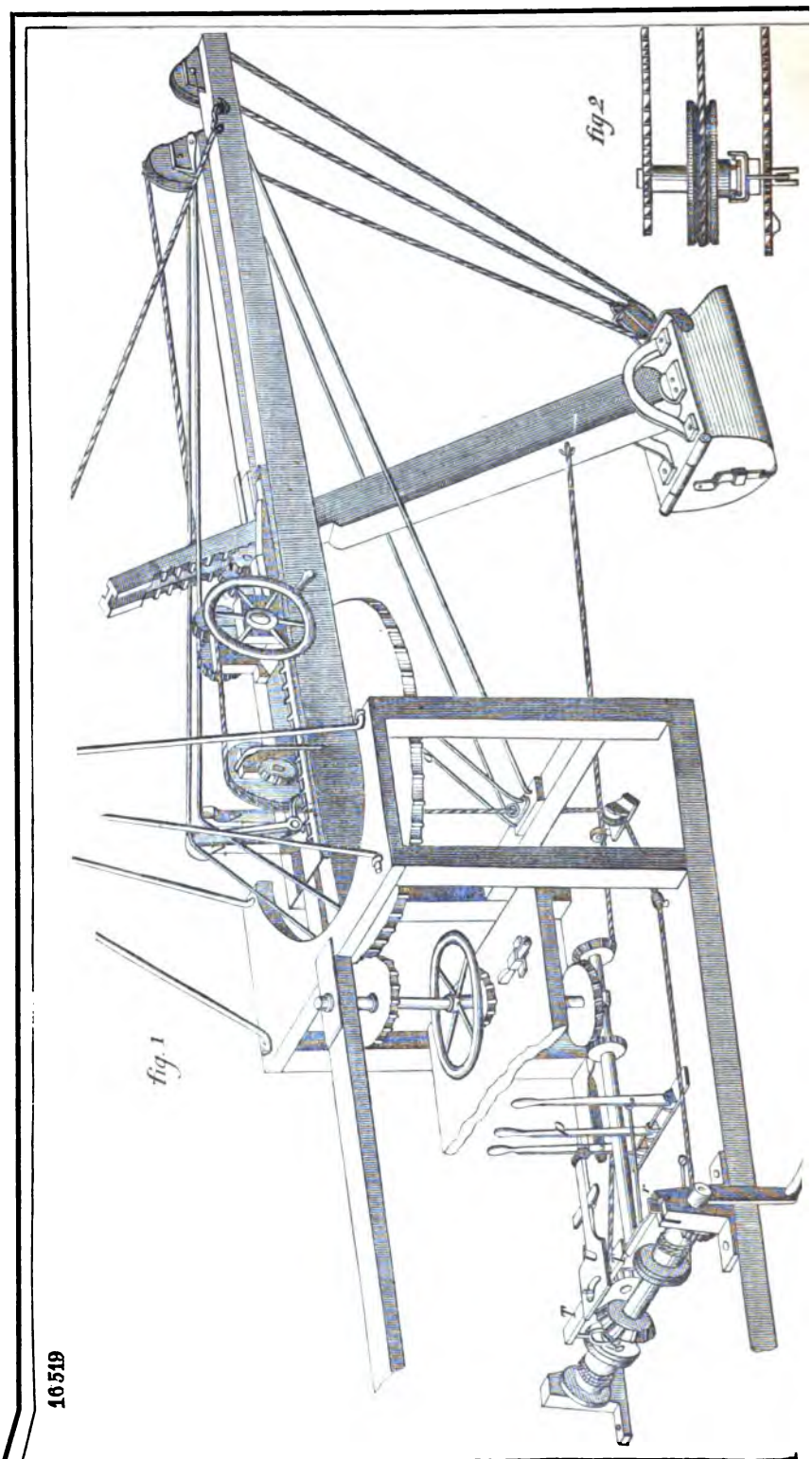
fig. 2
fig. 1
T
16519

17595

fig.1

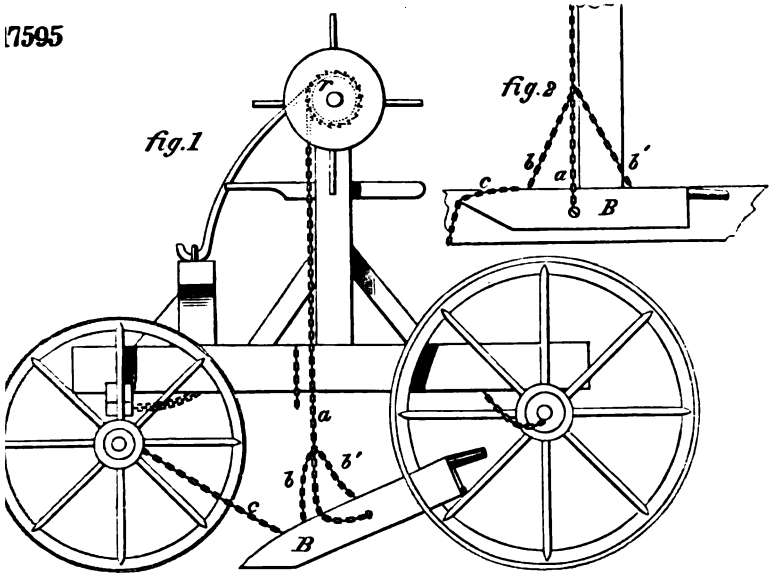

fig.2

16652

fig.1

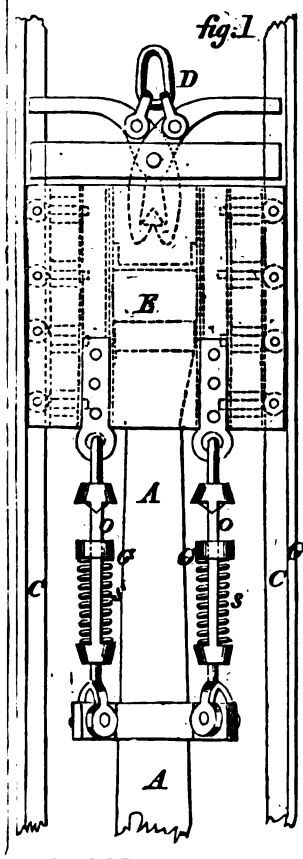

fig.2

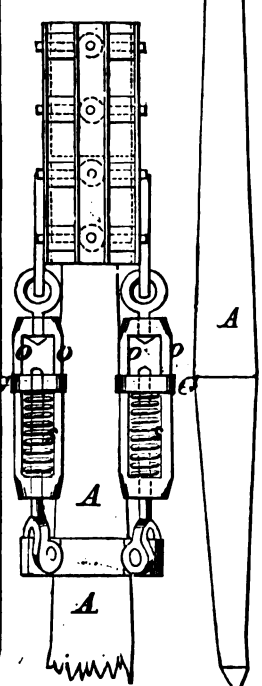

fig.3

17174

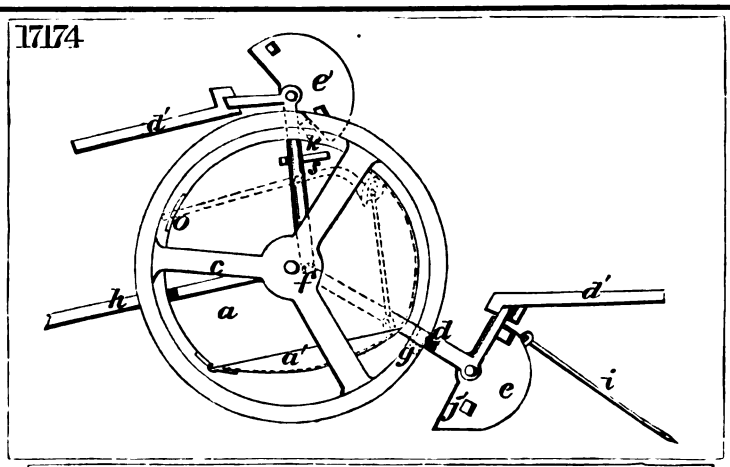

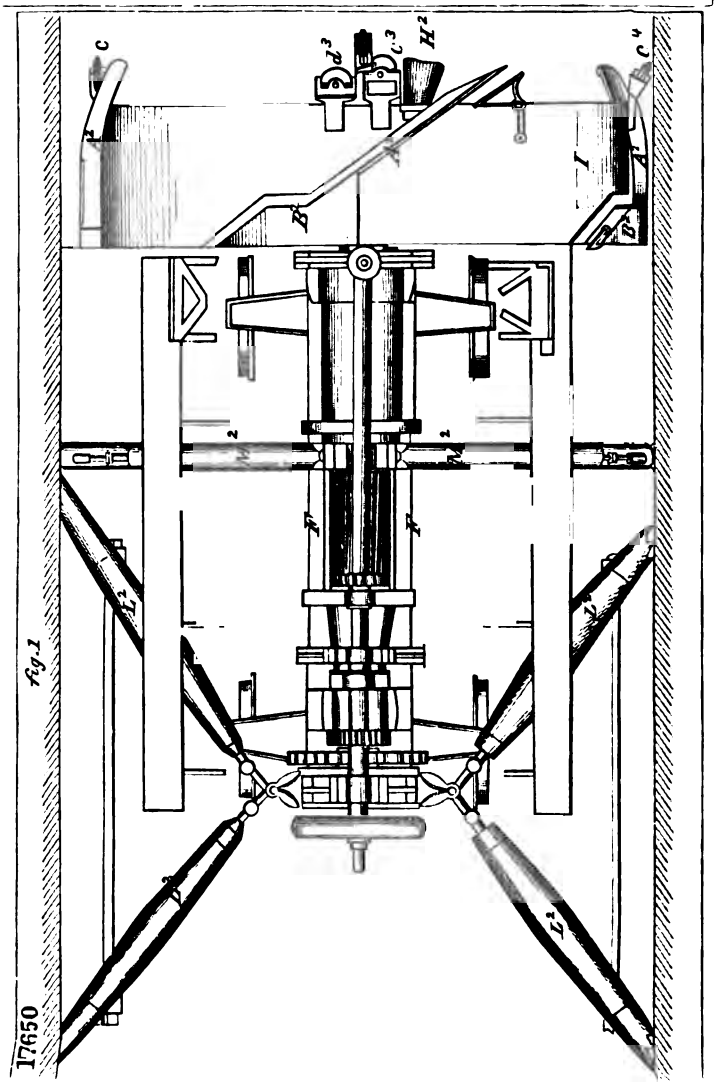

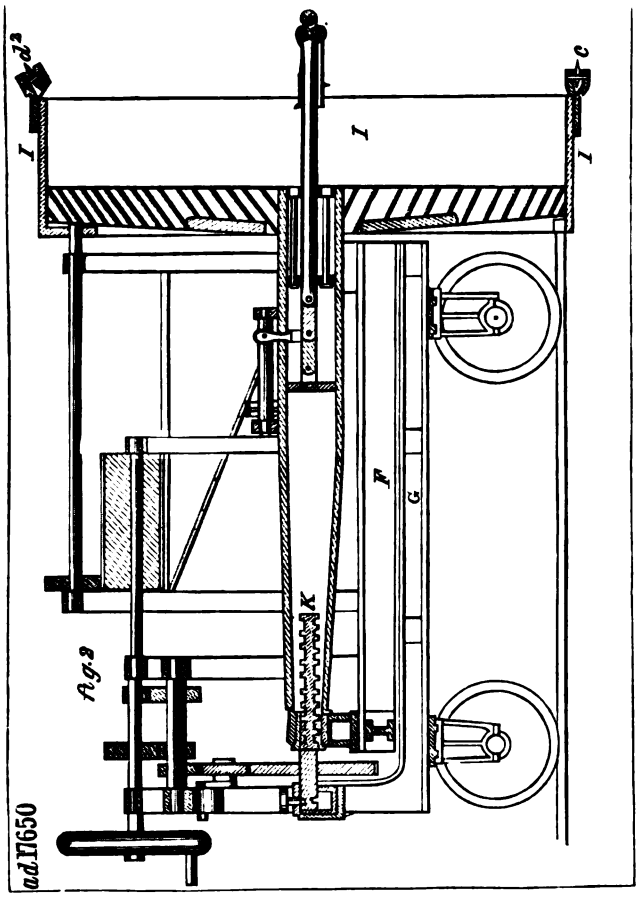

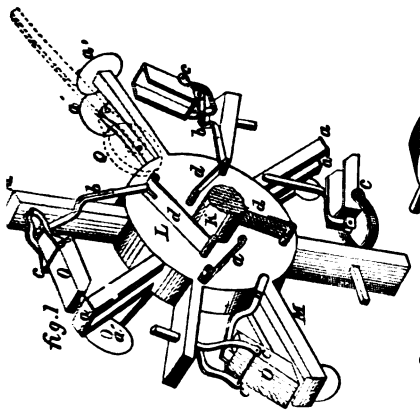

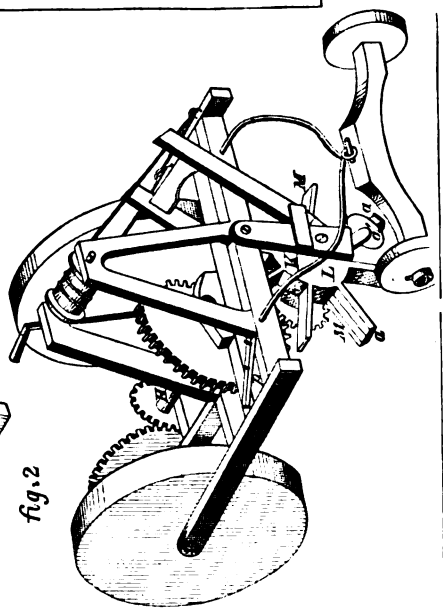

16397

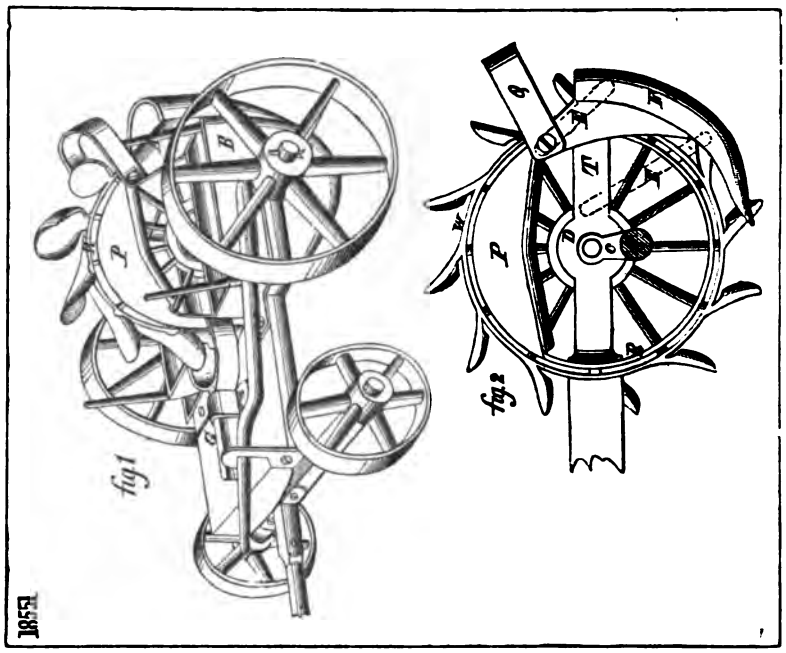
fig 1
fig 2
1853

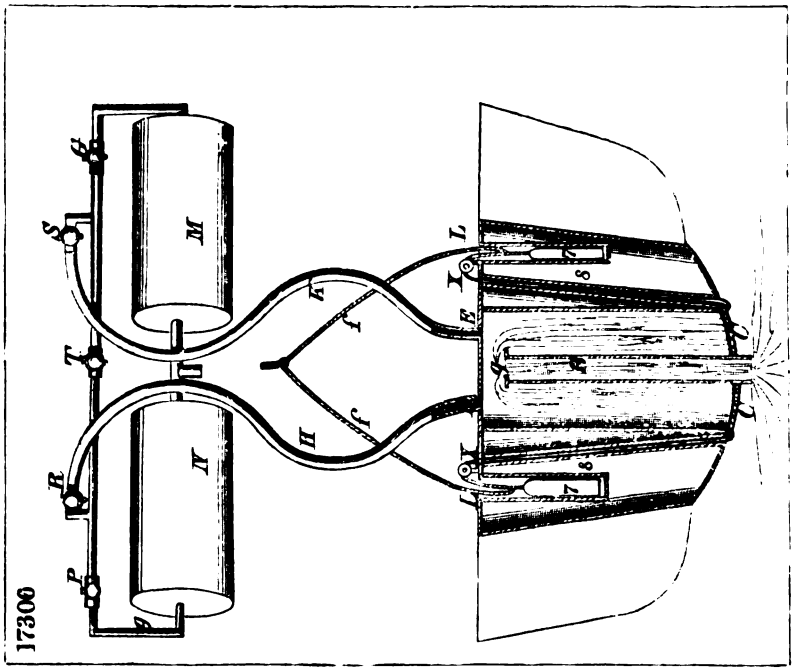
17300

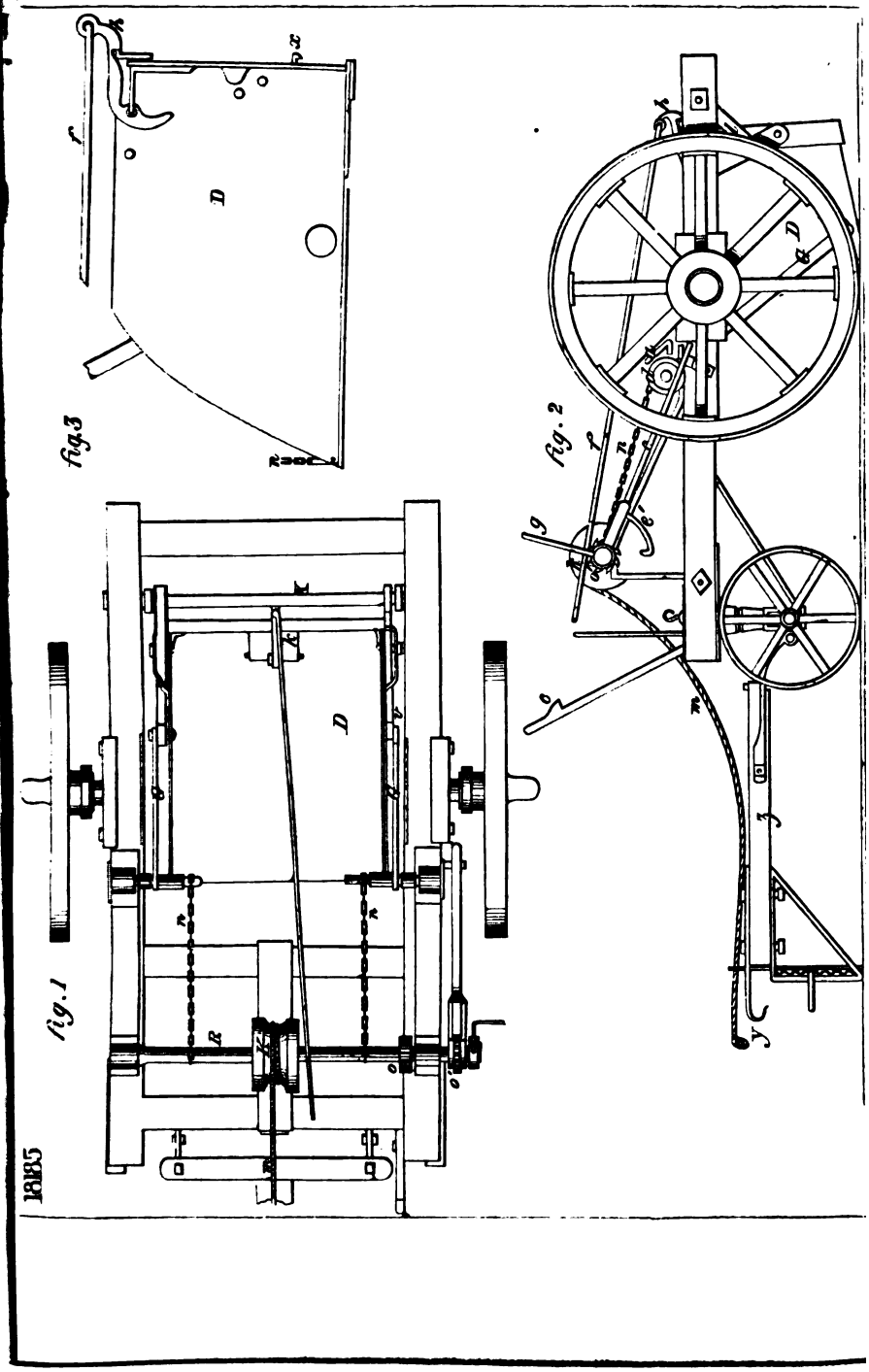
fig.3
fig.2
fig.1
1885

17669

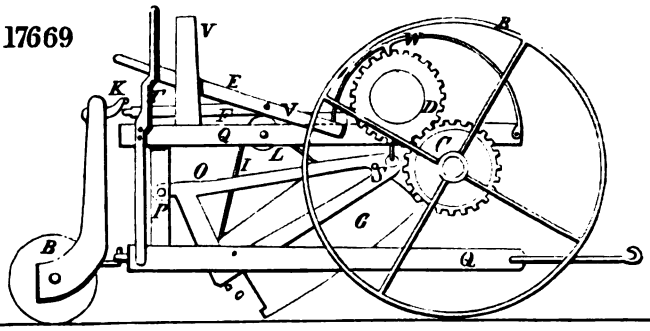

17692

fig. 1

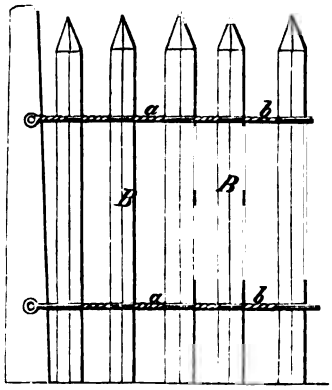

fig. 2

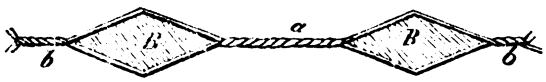

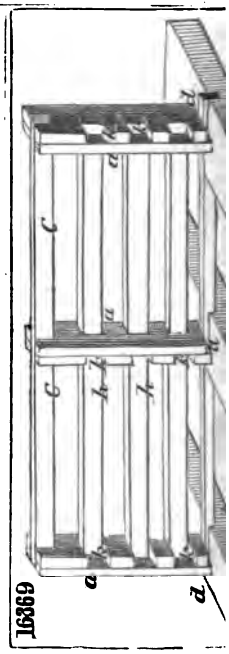

16369

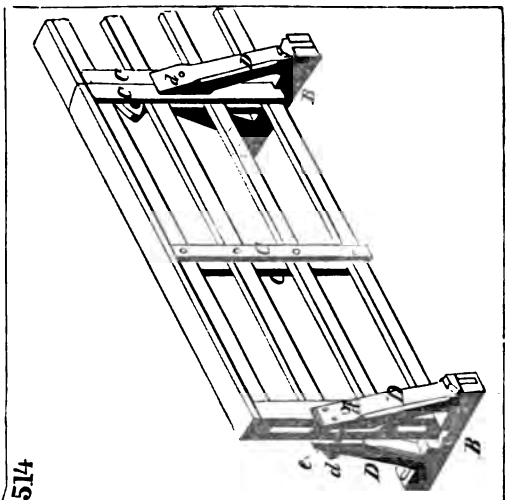

17514

16996

fig. 2

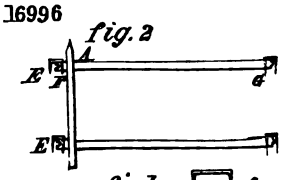

fig. 1 E fig.

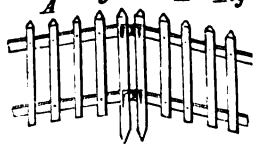

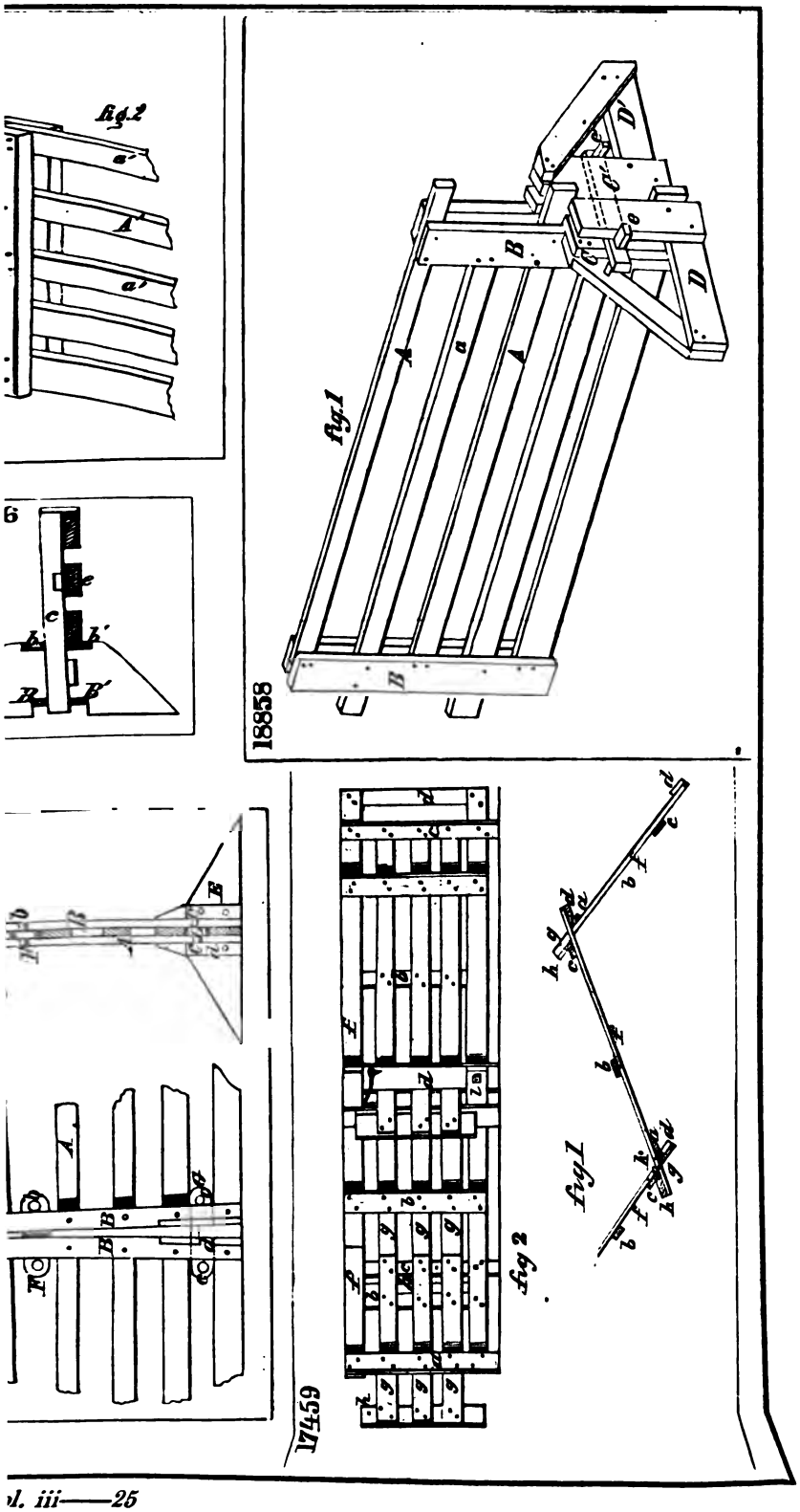
fig.2
fig.1
18858
fig 2
fig 1
17459

18934

fig. 1

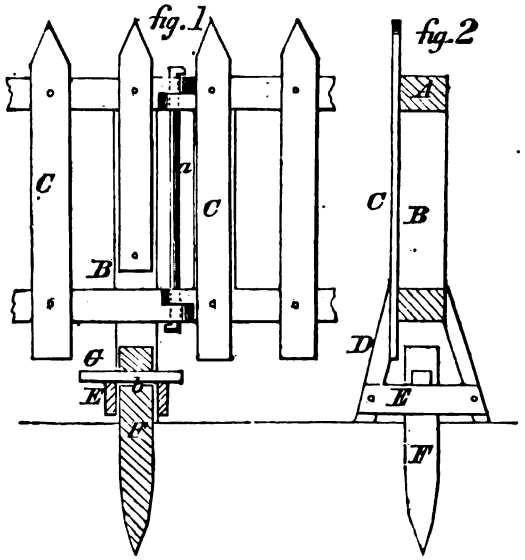

fig. 2

18064

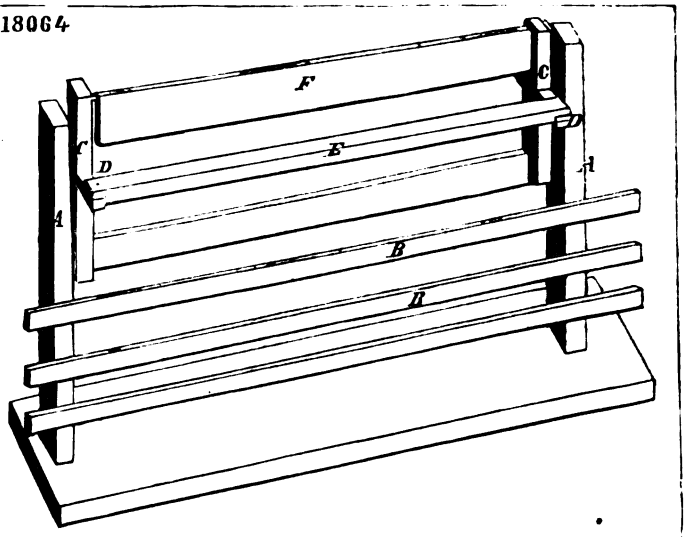

16598

fig 1

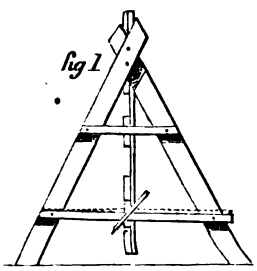

fig 2

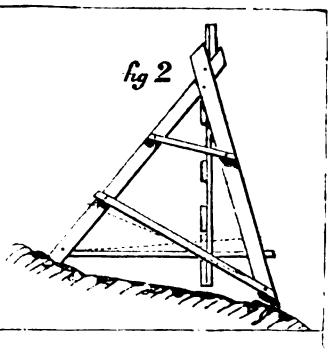

17201

fig 1

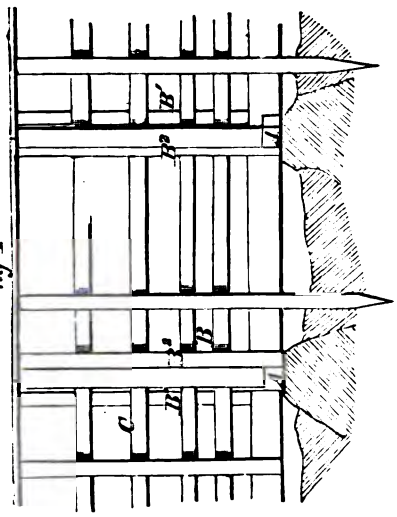

fig 2

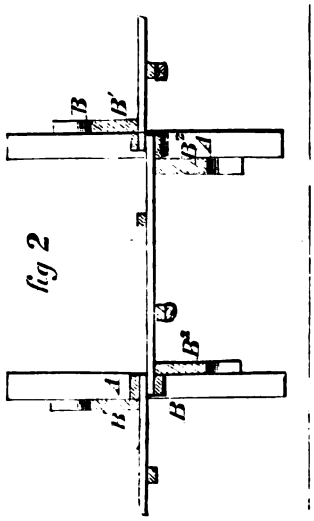

16486

fig.1

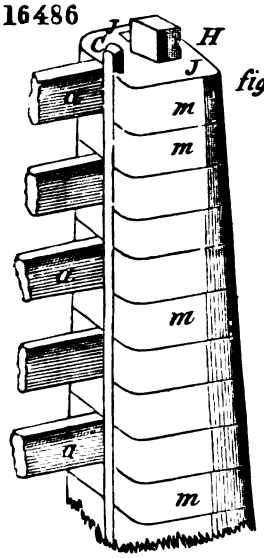

fig.2

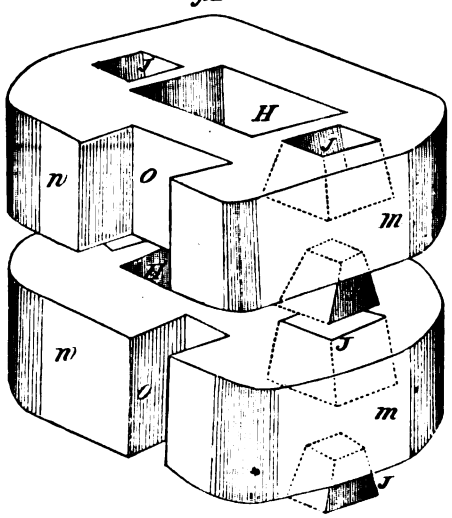

17742

fig.1

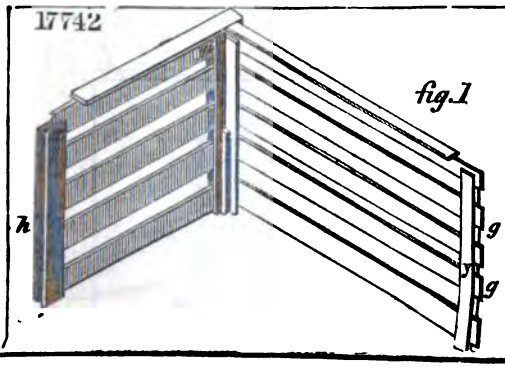

fig.2

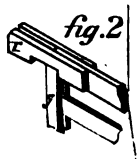

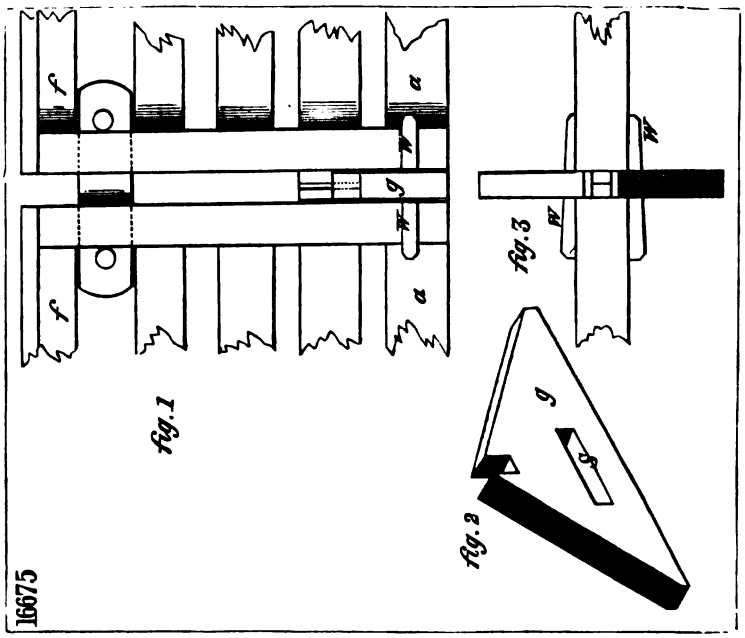
16675
fig. 1
fig. 2
fig. 3

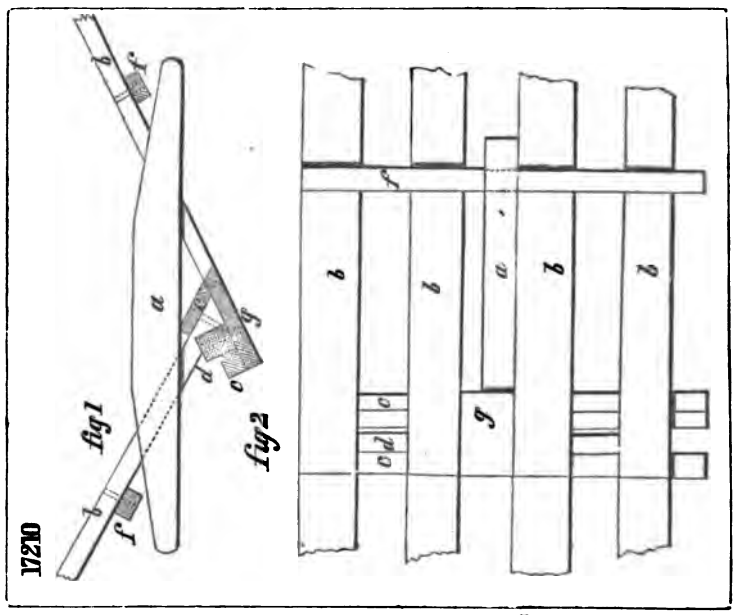
17210
fig1
fig2

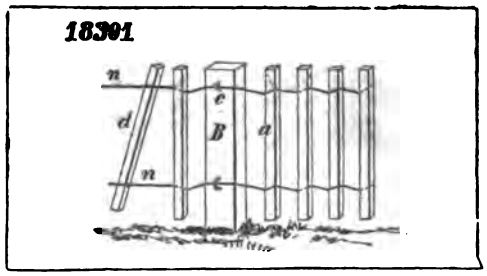
18301

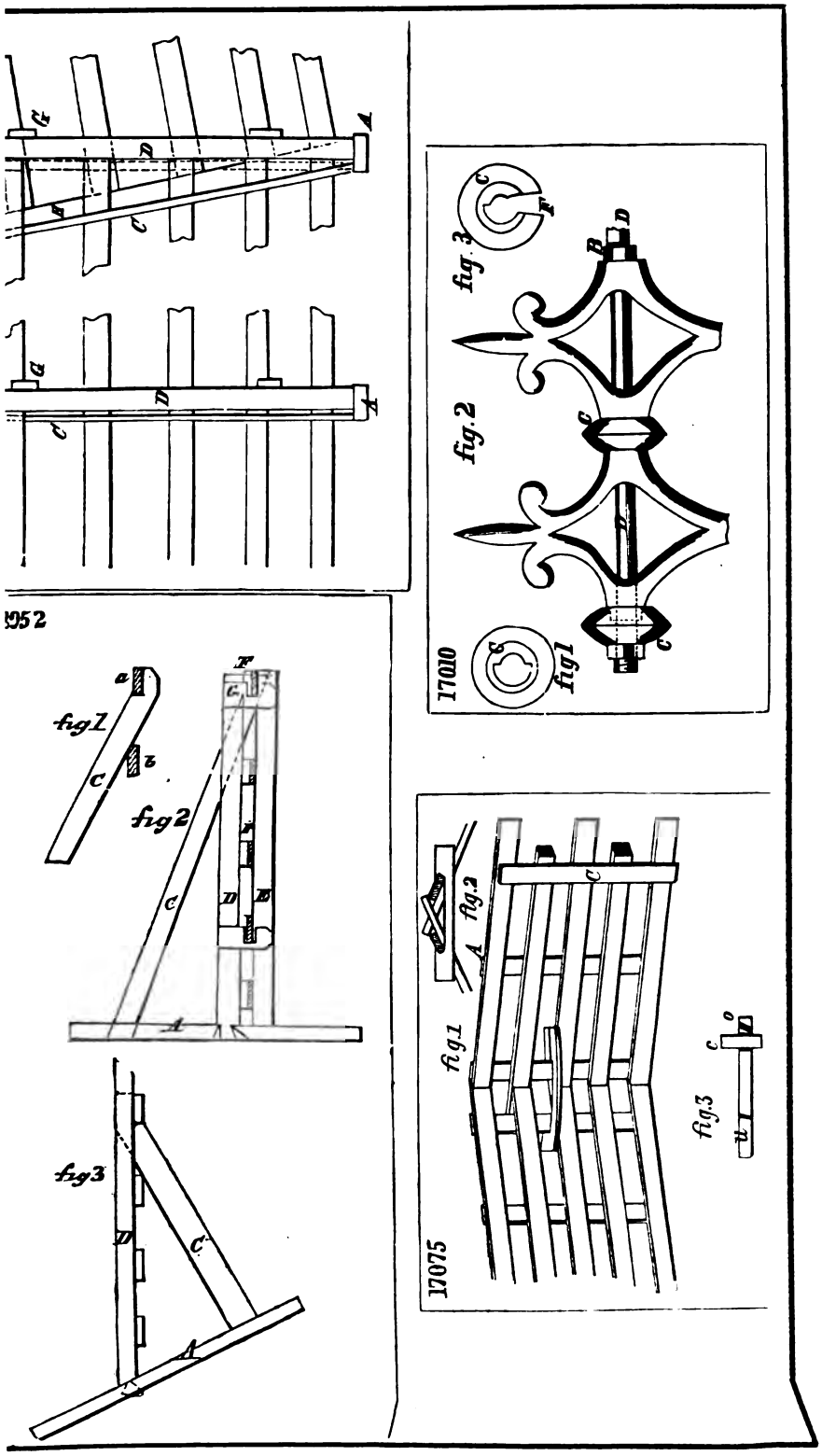
17010
fig.1
fig.2
fig.3
17075
fig.1
fig.2
fig.3
fig1
fig2
fig3

17335

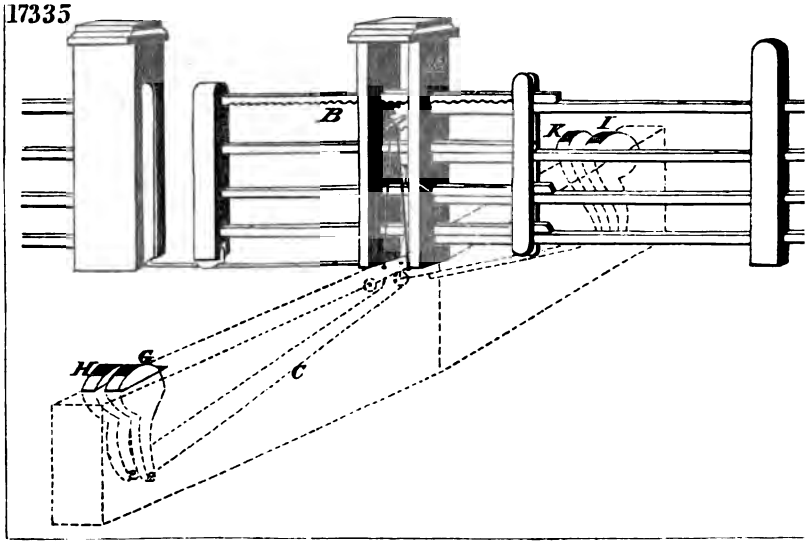

16386

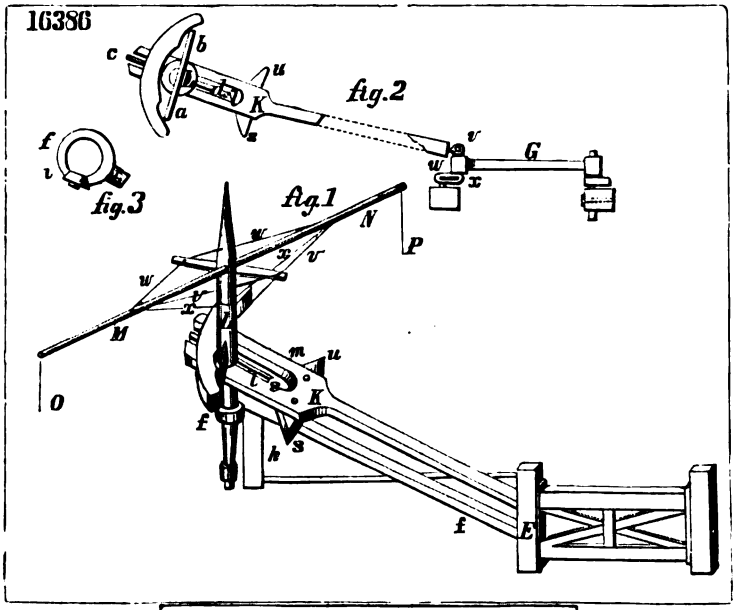

18449

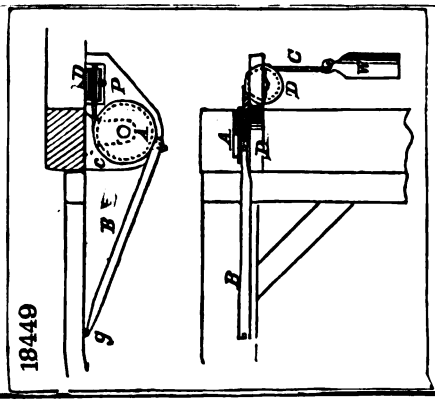

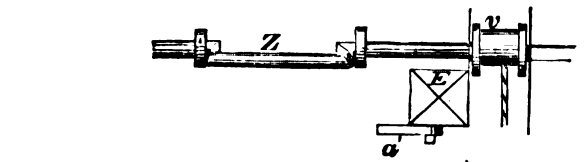

fig. 3

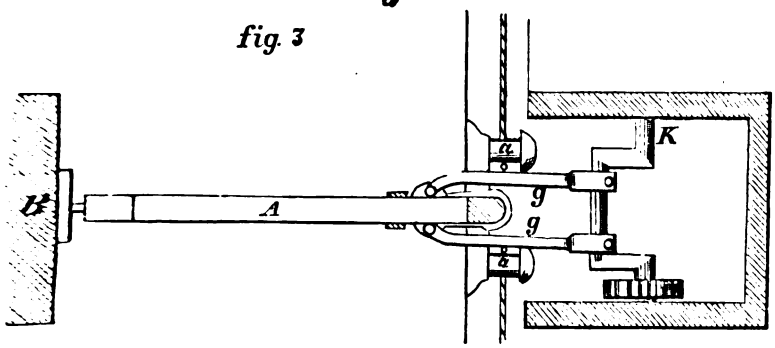

fig. 1

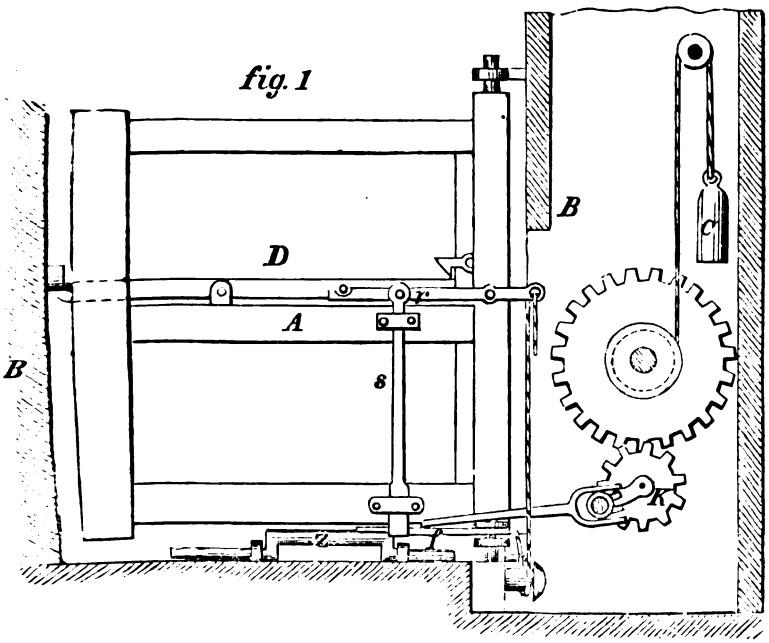

ad 18283

fig. 1

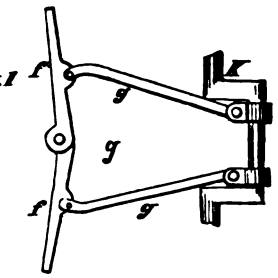

fig. 2

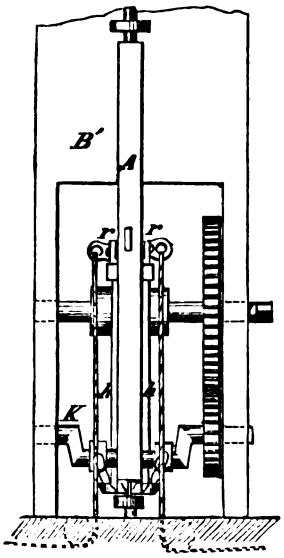

fig. 1

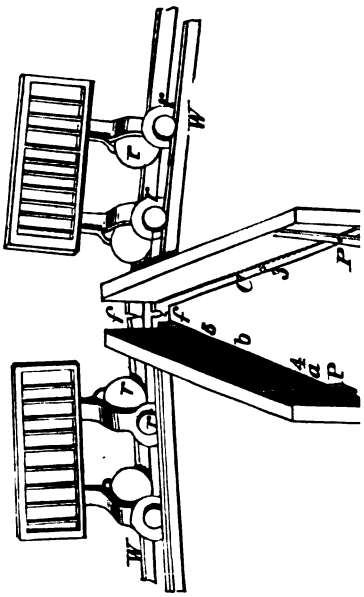

fig. 2

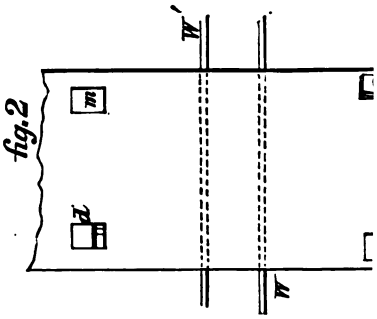

17202

16400

fig 1

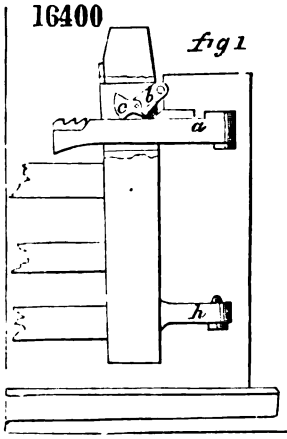

fig. 2

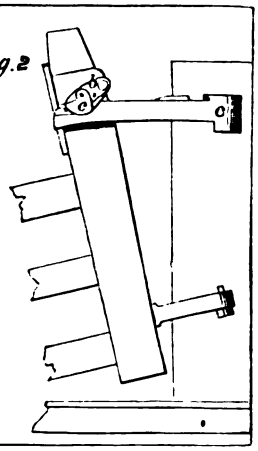

16791

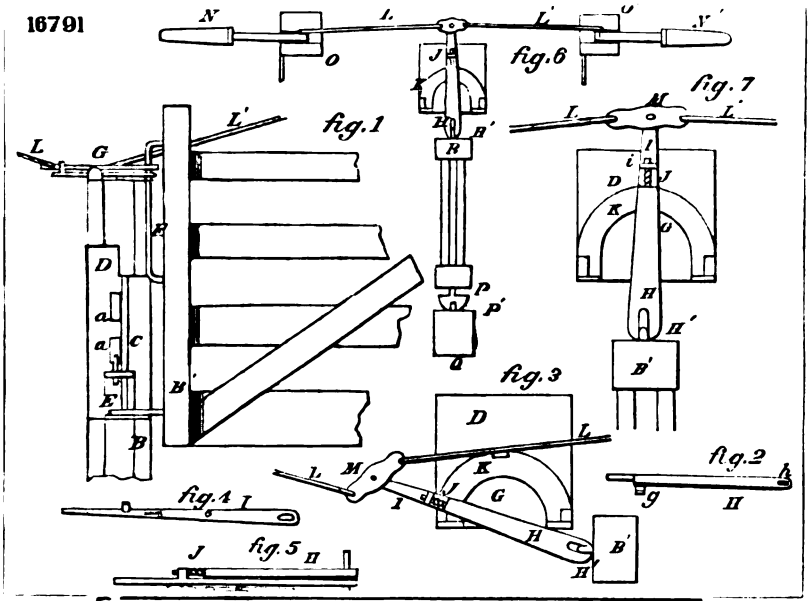

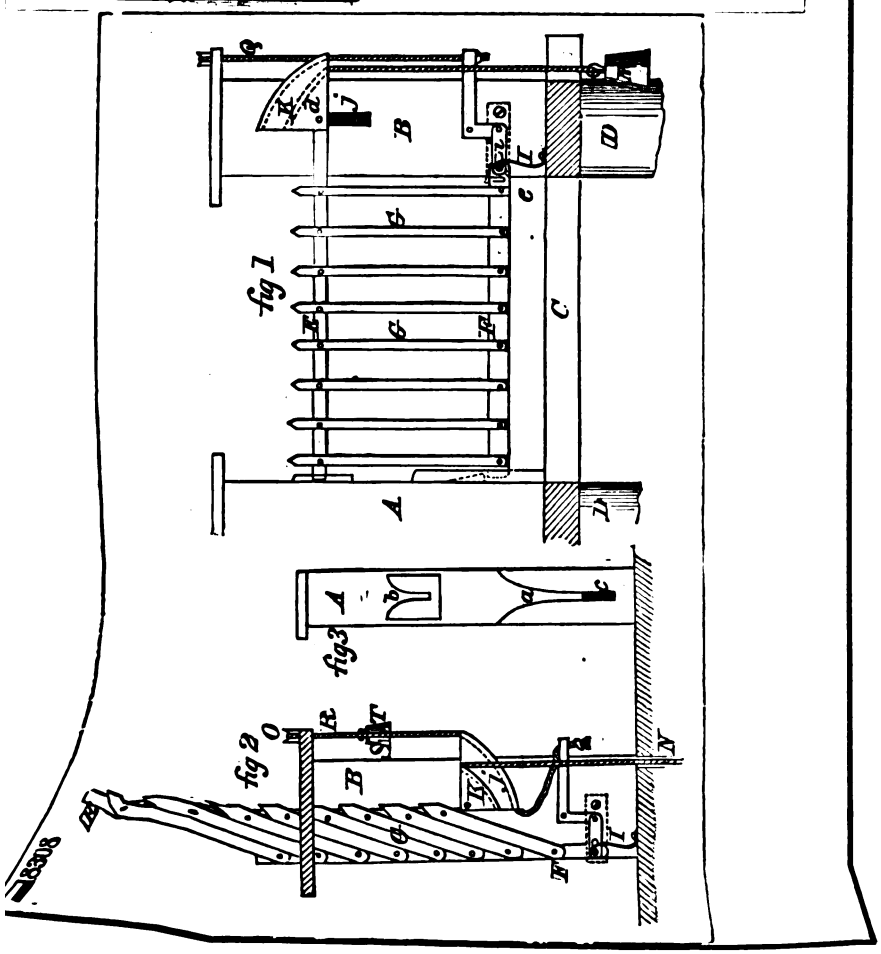

17699

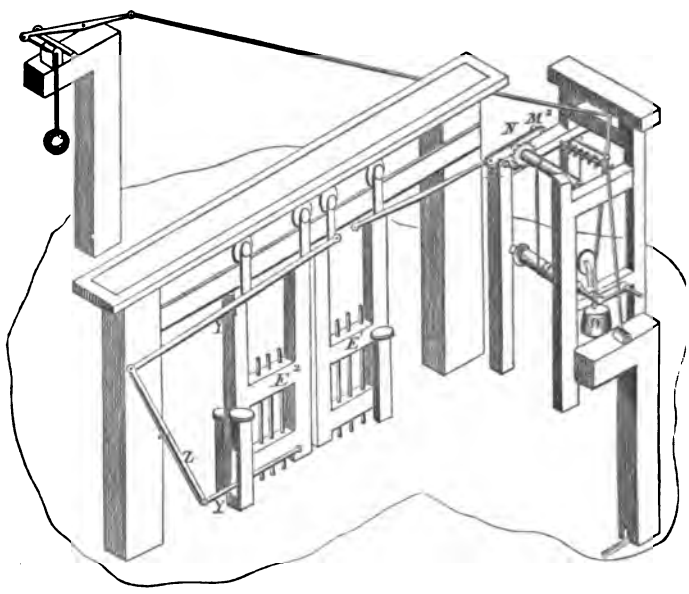

16978

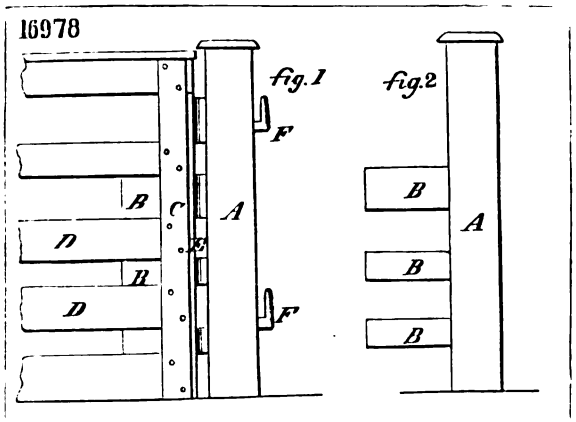

18932

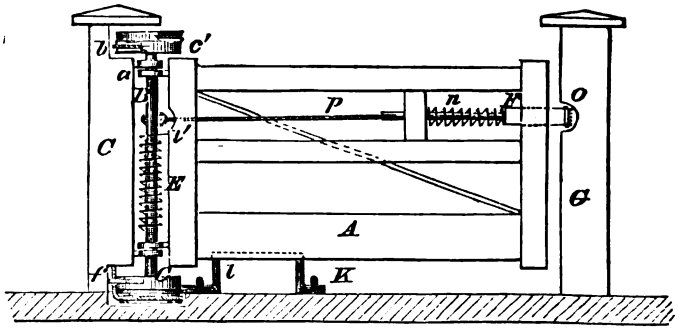

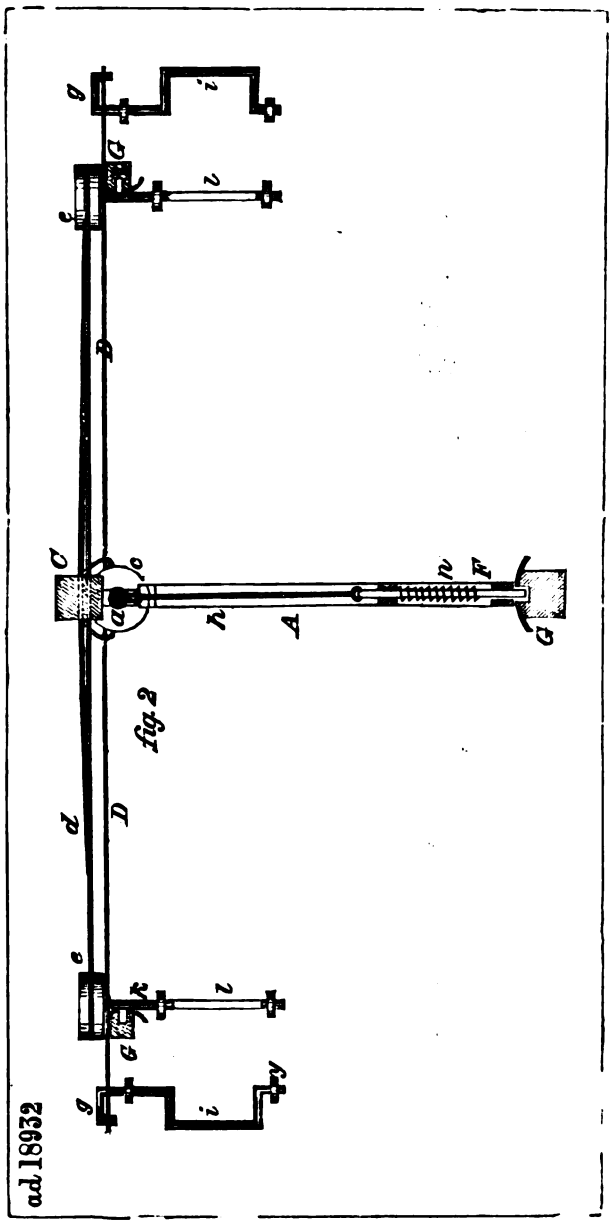

16425

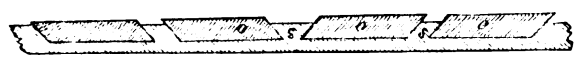

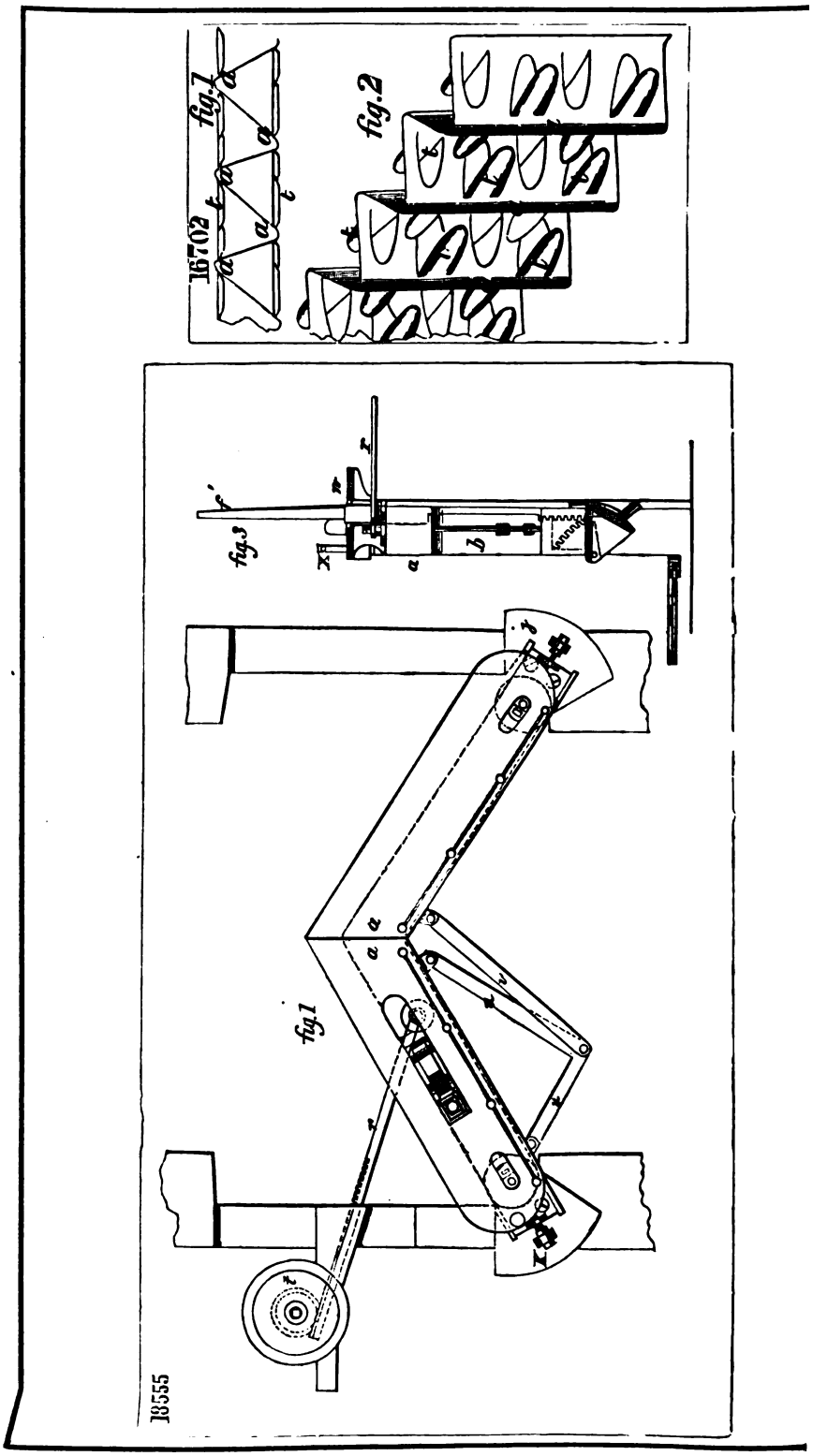
16702
fig.1
fig.2
fig.3
18555

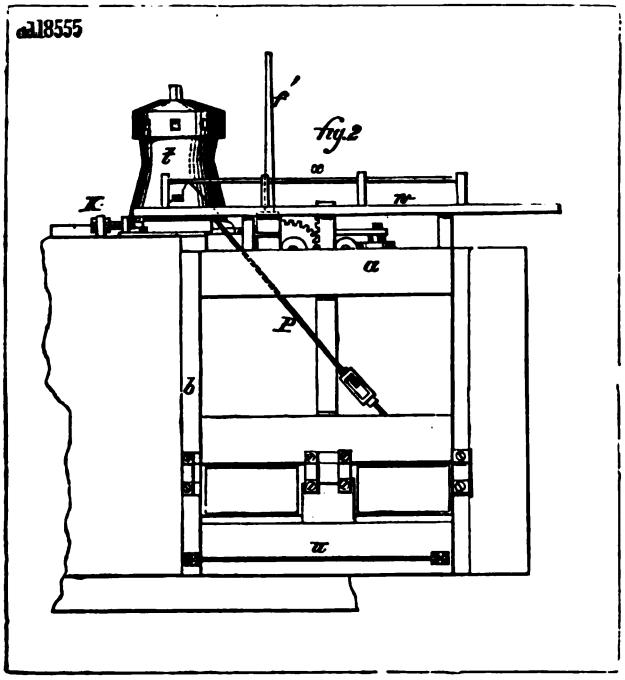
a118555
fig.2
f'
t
x
w
K
a
P
b
u

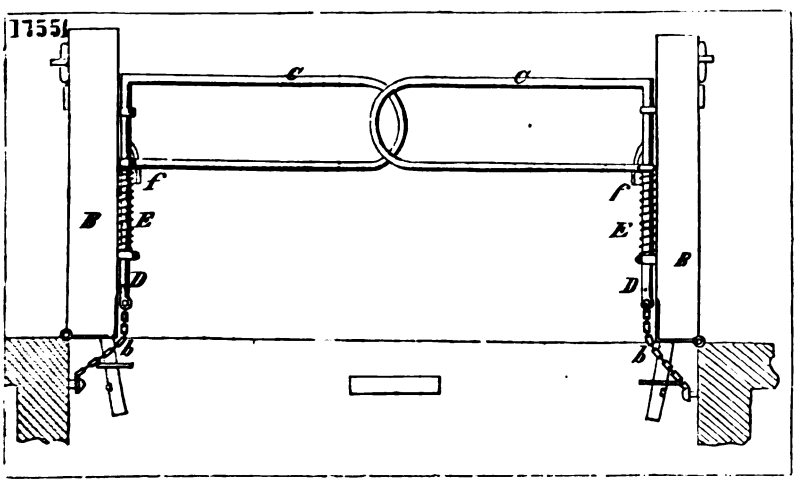
17551
c
c
f
f
B
E
E
B
D
D
b
b

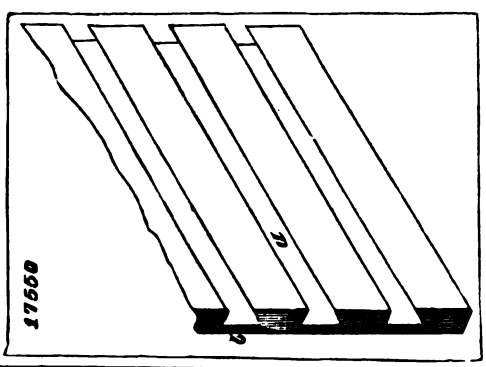
17550
u

11270

fig.1

fig. 2

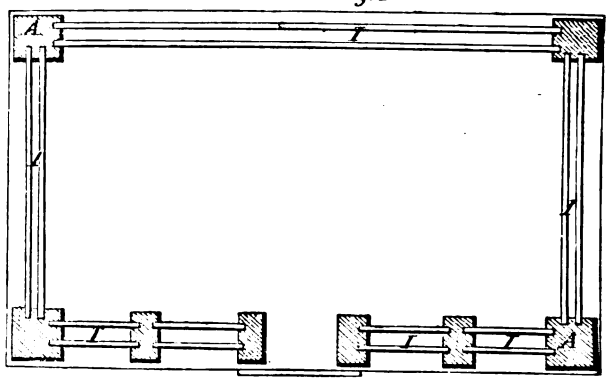

fig.3

17065

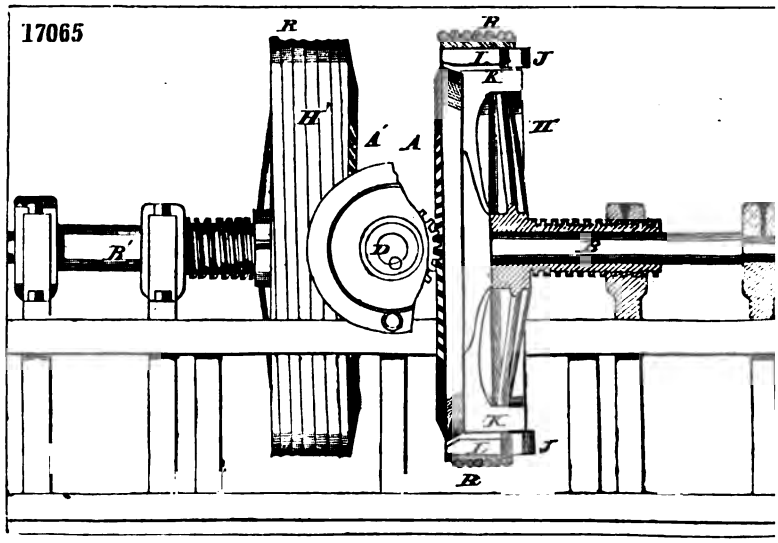

17138

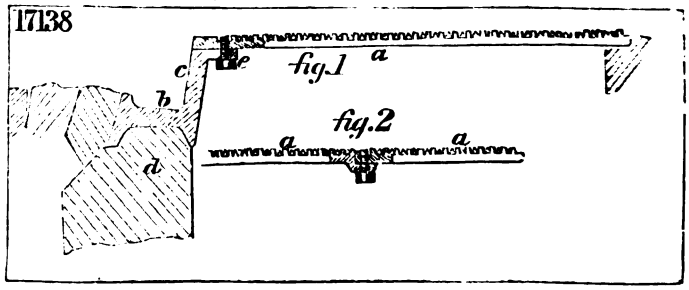

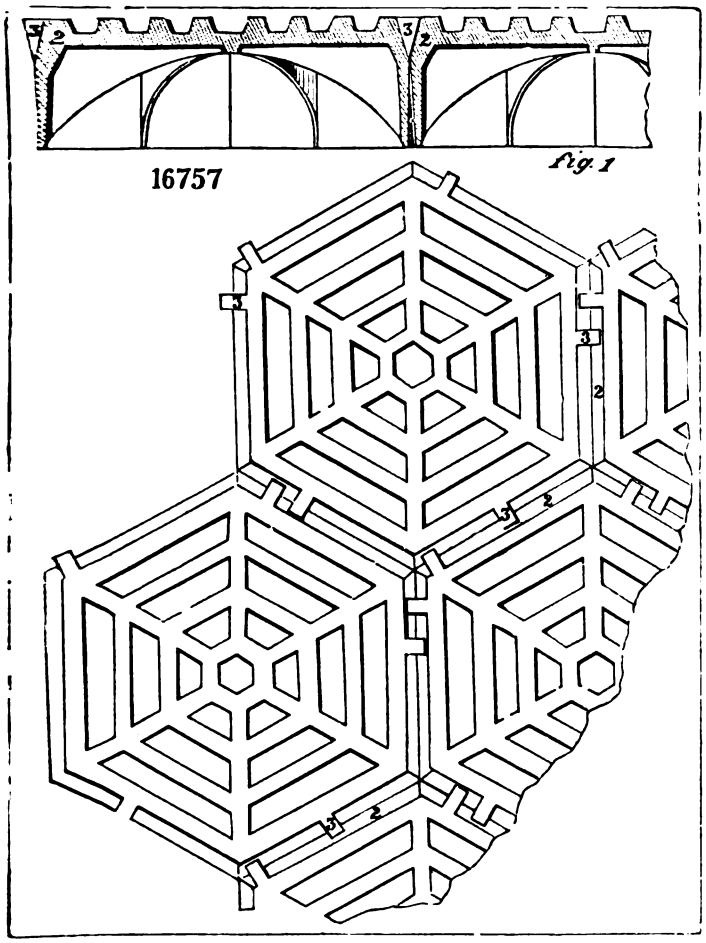
16757
Fig. 1

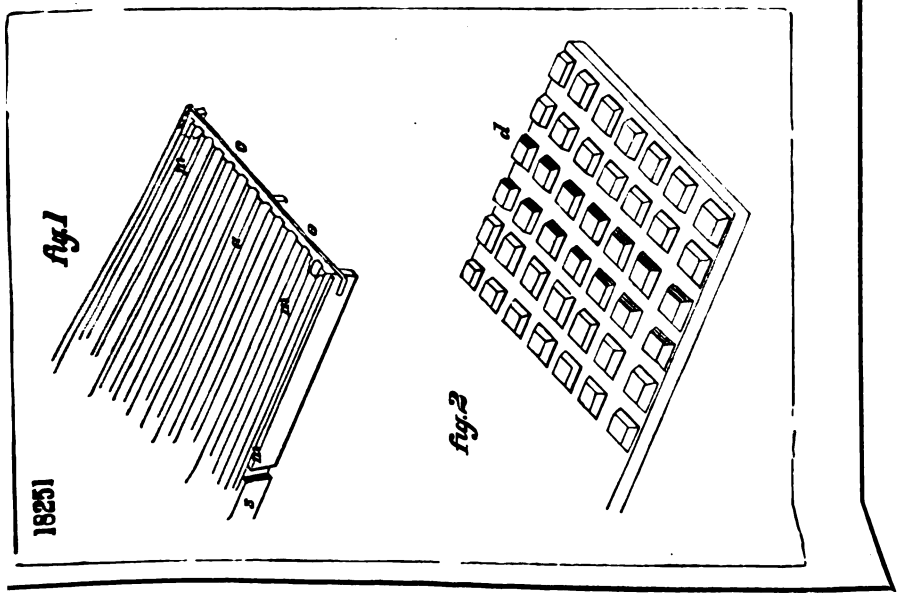
18251
fig.1
fig.2

17662

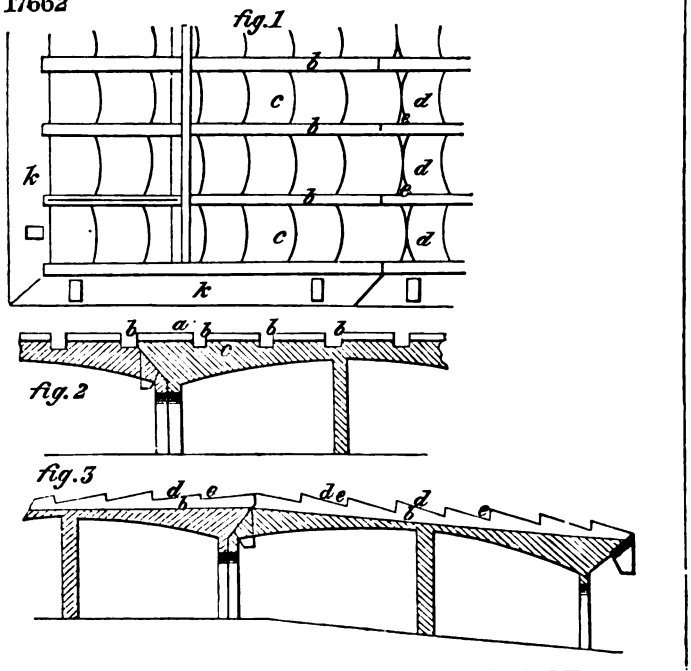

16490.

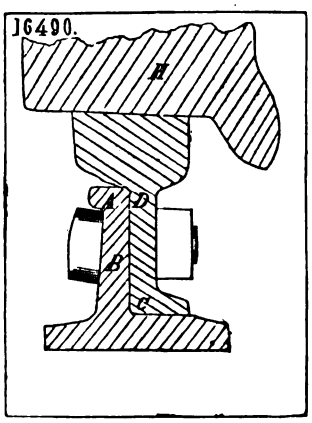

16692

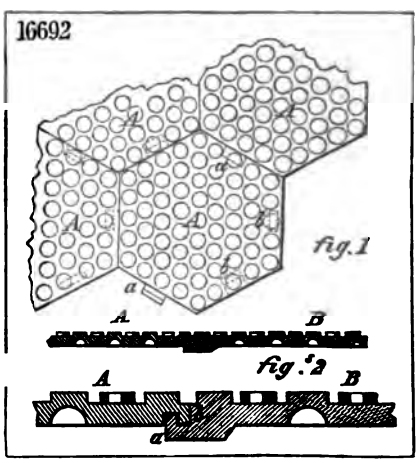

16605

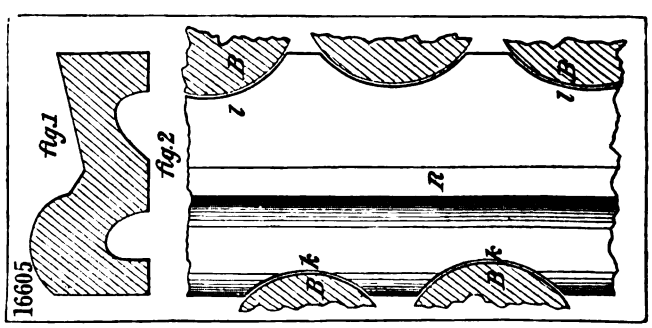

17478

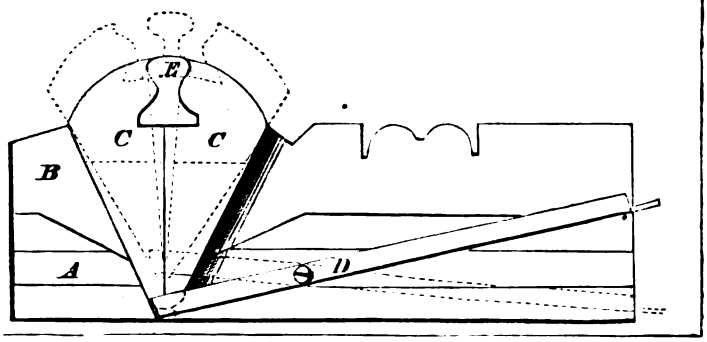

17178

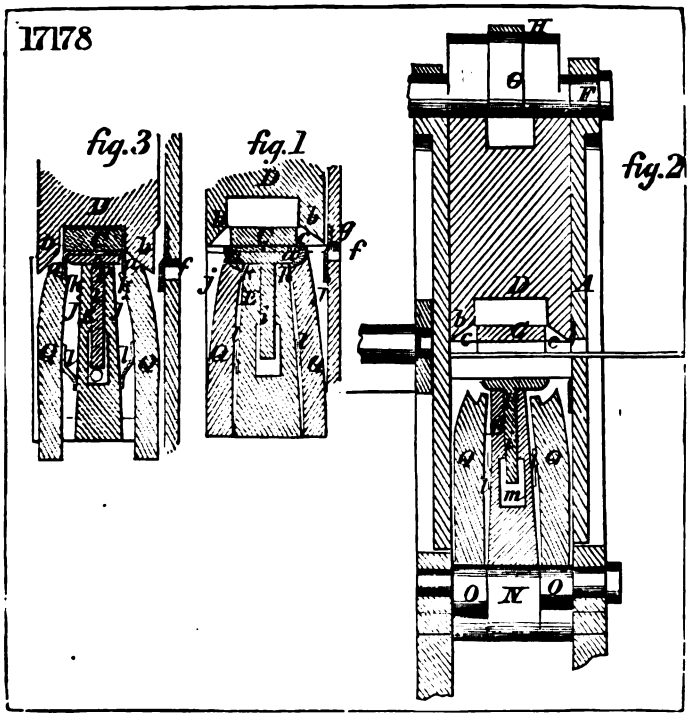

18023.

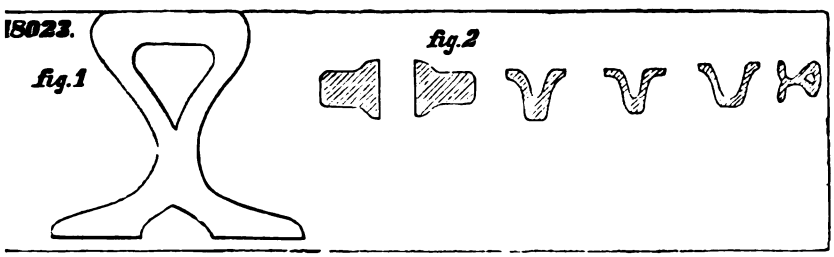

17580

fig.1

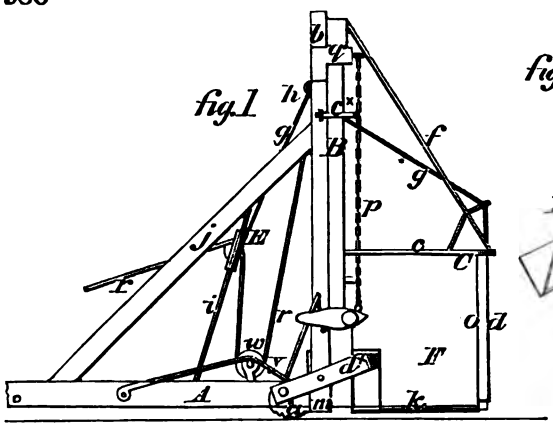

fig.3

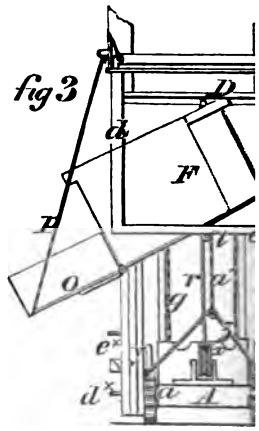

fig.2

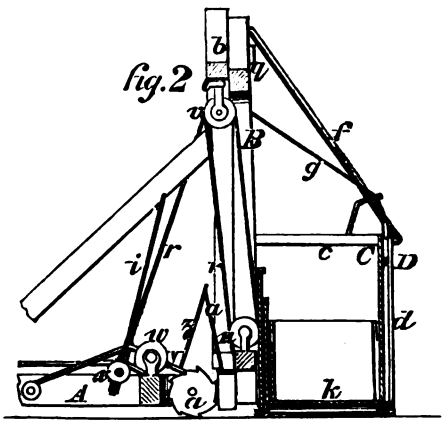

18144

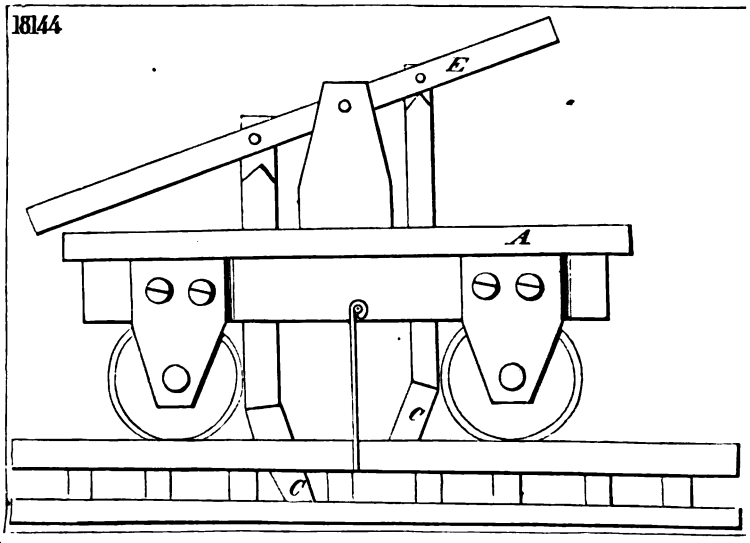

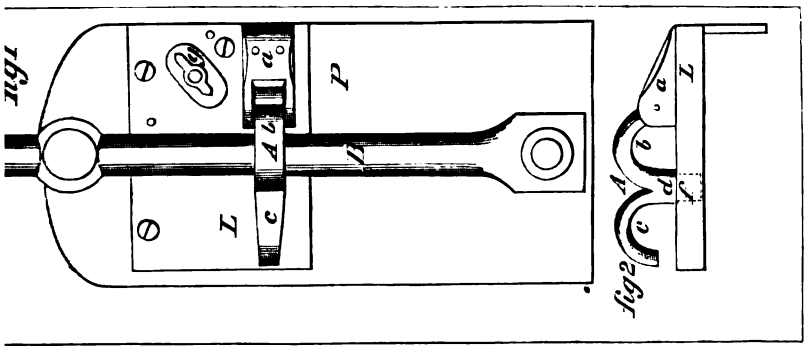

16898

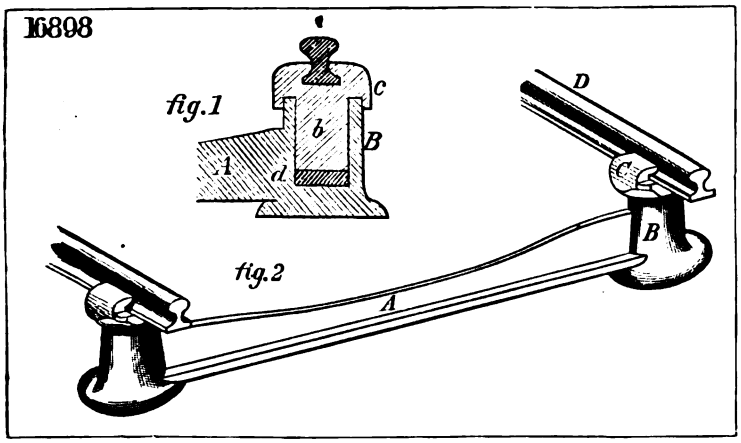

16623

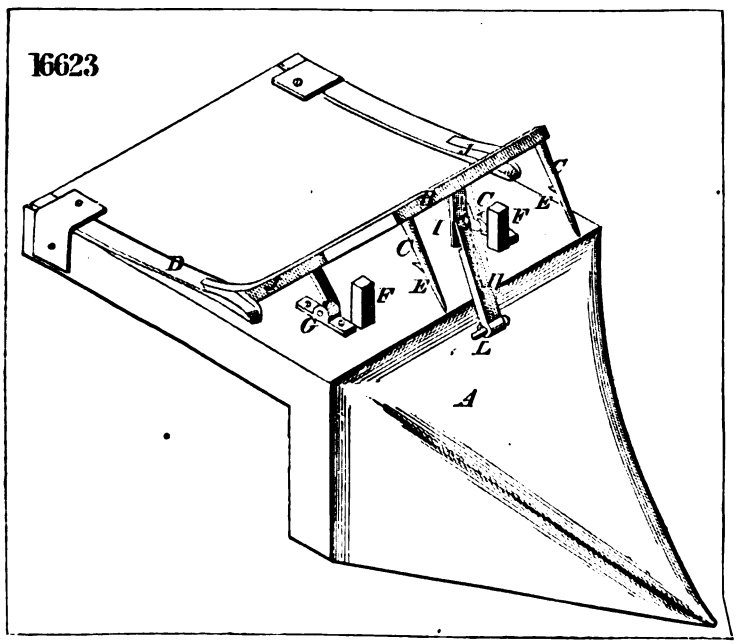

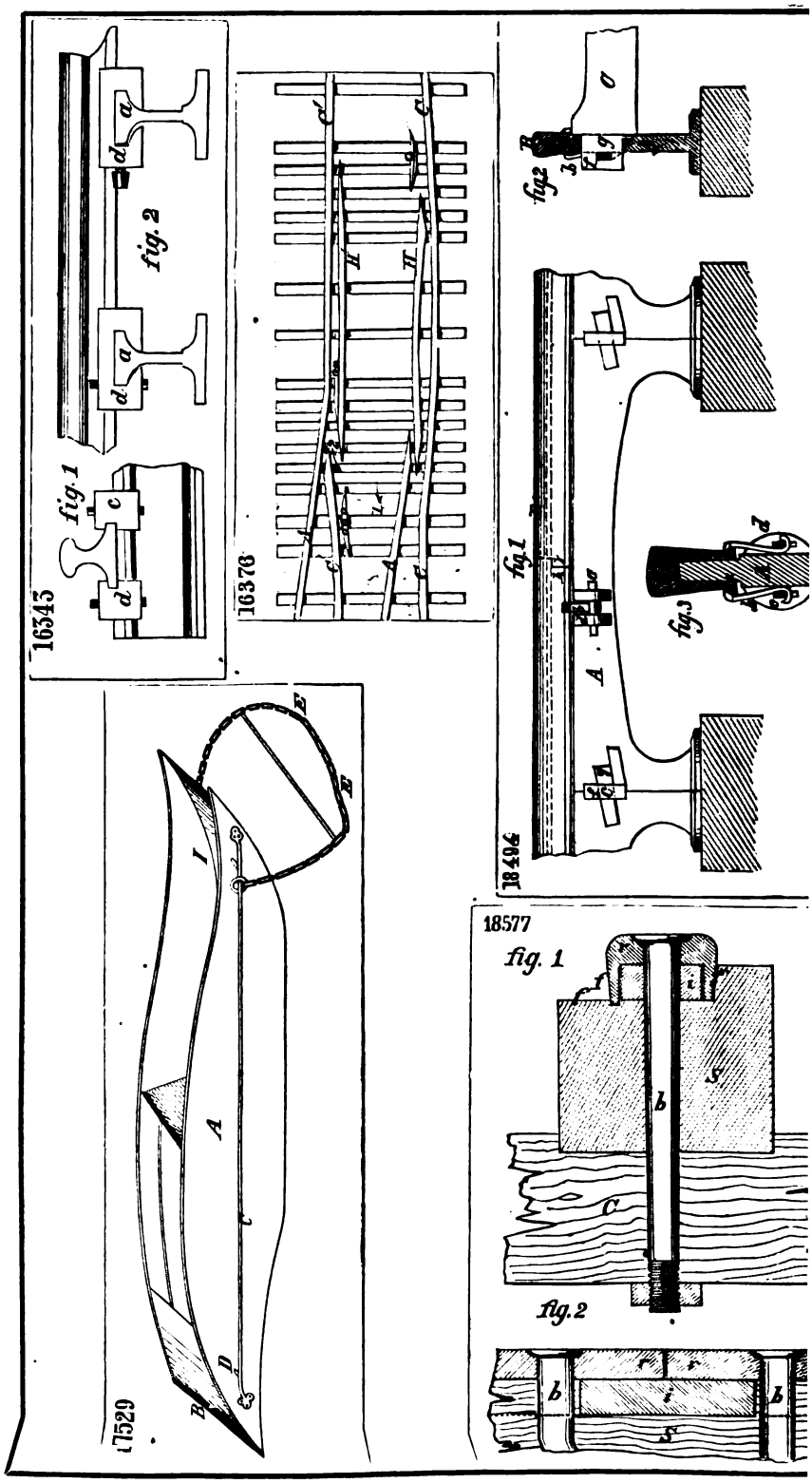
16345
fig. 1
fig. 2
16376
18496
fig. 1
fig. 2
fig. 3
18577
fig. 1
fig. 2
17529

16963

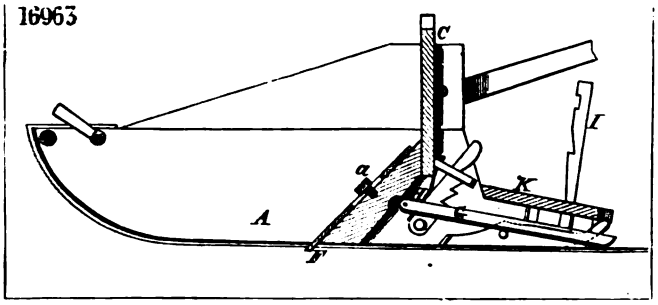

17003.

fig. 1

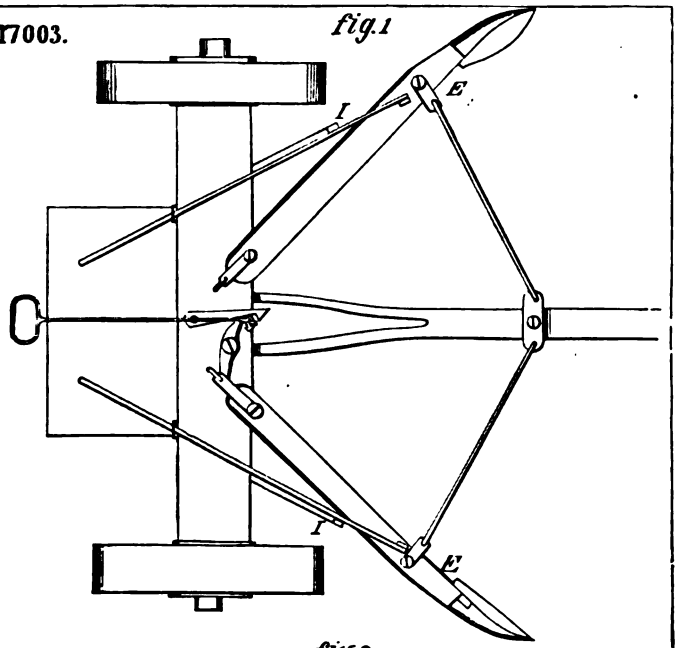

fig. 2

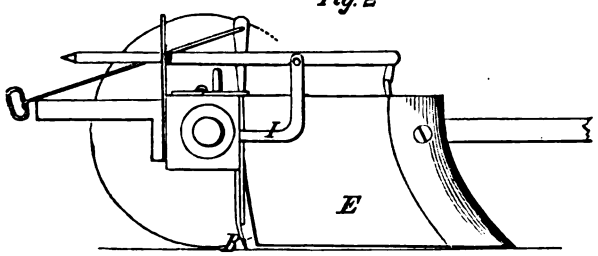

17331

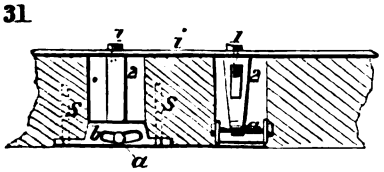

18278

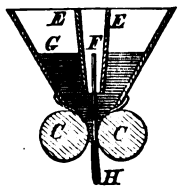

17874

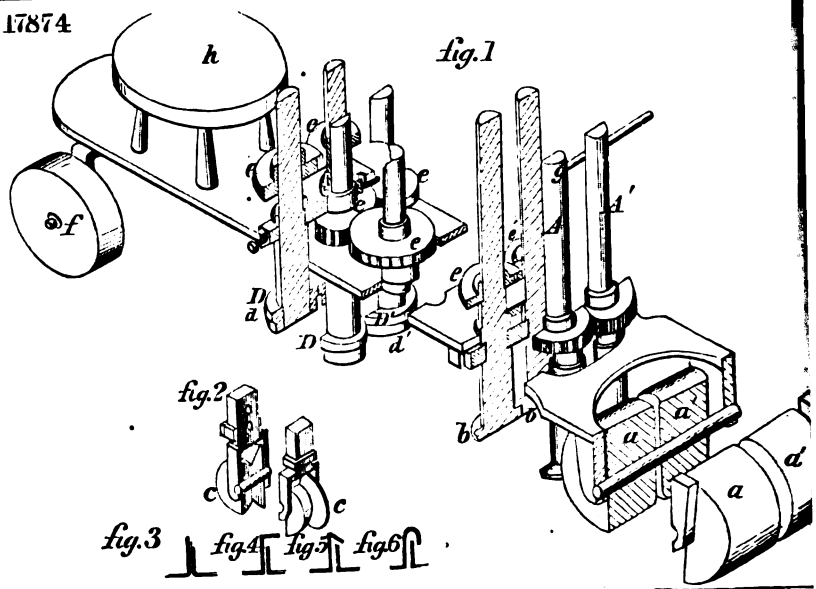

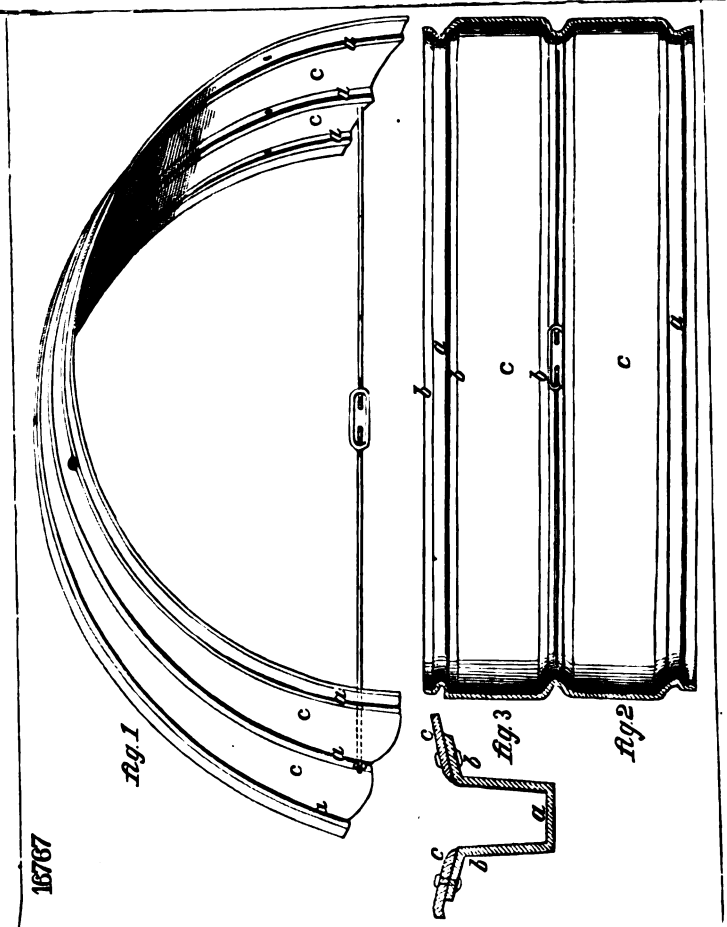

16767

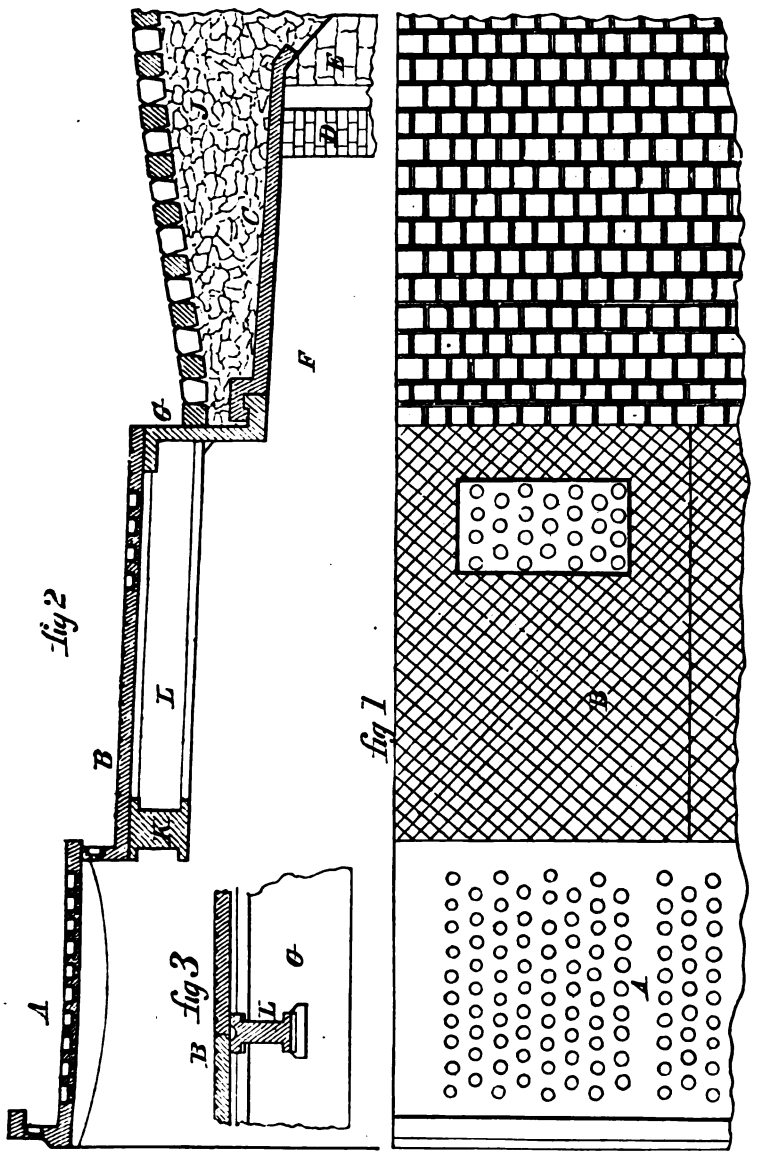
fig 2
fig 1
fig 3
A
B
C
D
E
F
G
H
I
K
L

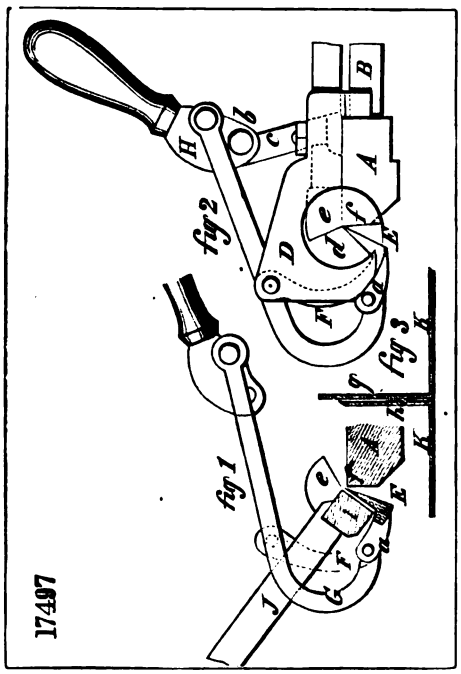
17497
fig 1
fig 2
fig 3

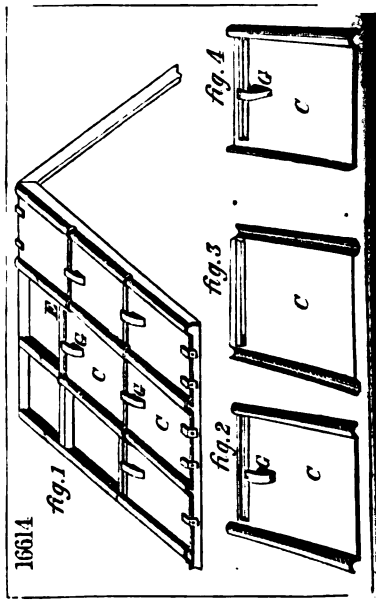
16614
fig. 1
fig. 2
fig. 3
fig. 4

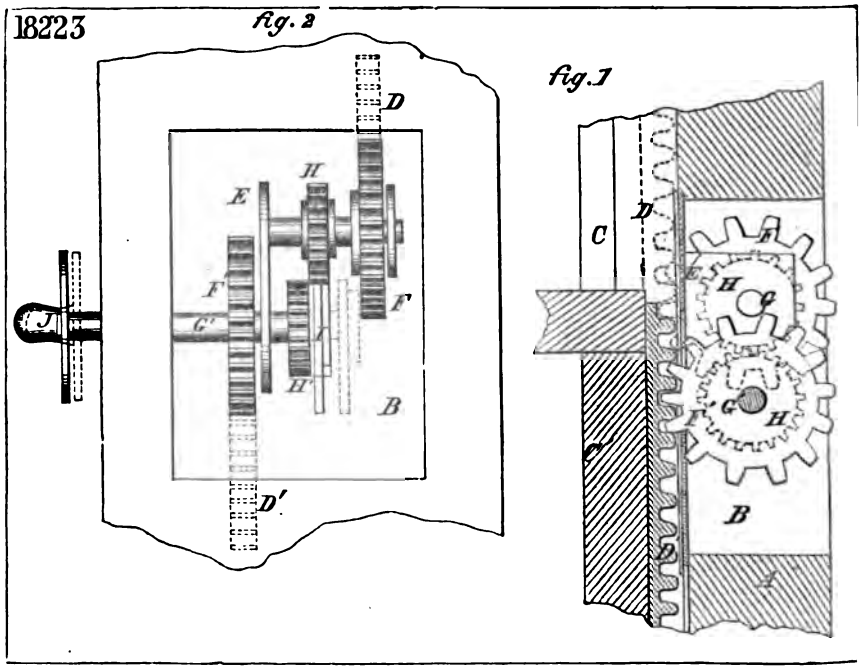
18223
fig. 2
fig. 1

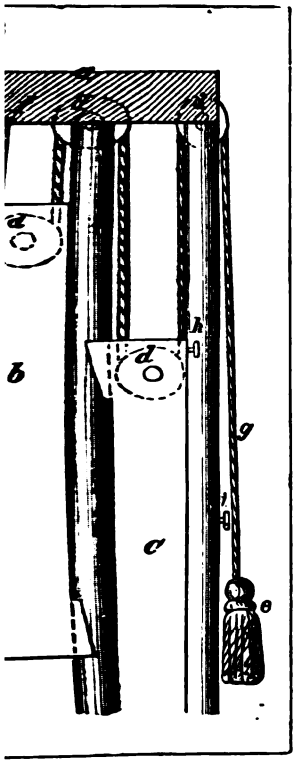
b
d
h
g
i
c
e

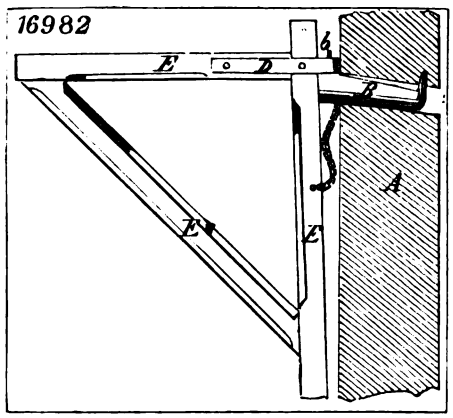
16982
E
D
b
A
E
E

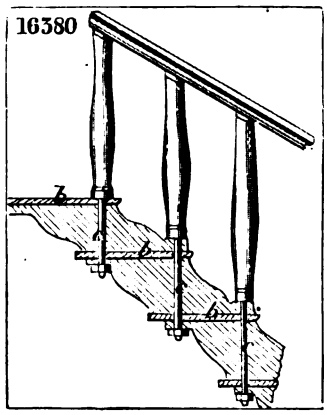
16380
b
b
b

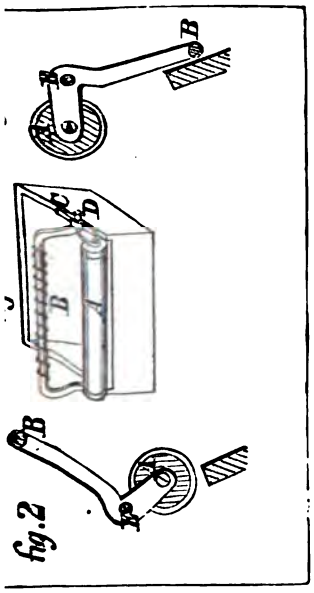
B
C
D
B
A
B
fig.2

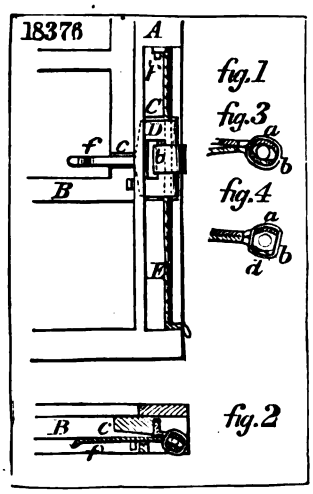
18376
A
C
D
f
c
B
E
fig.1
fig.3
a
b
fig.4
a
b
d
B
C
fig.2

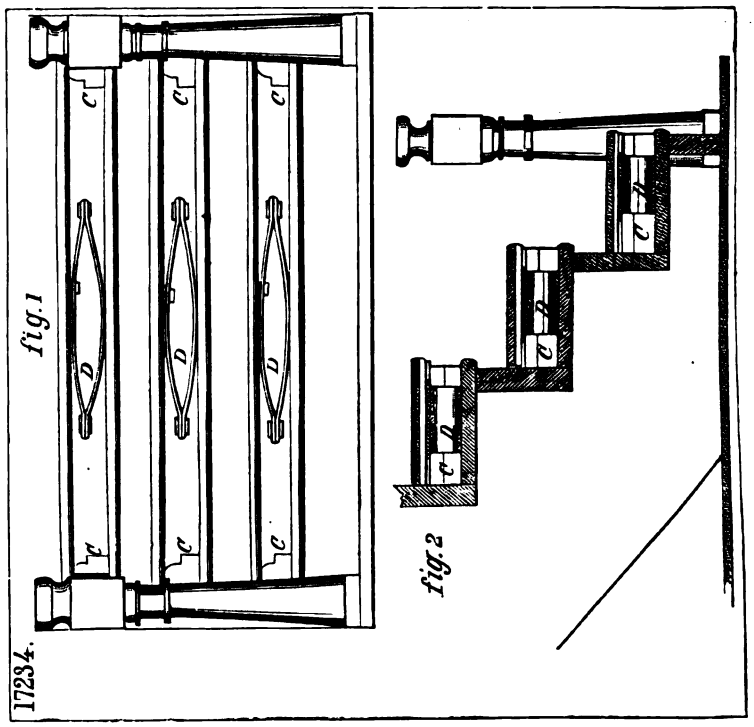
fig. 1
fig. 2
17234.

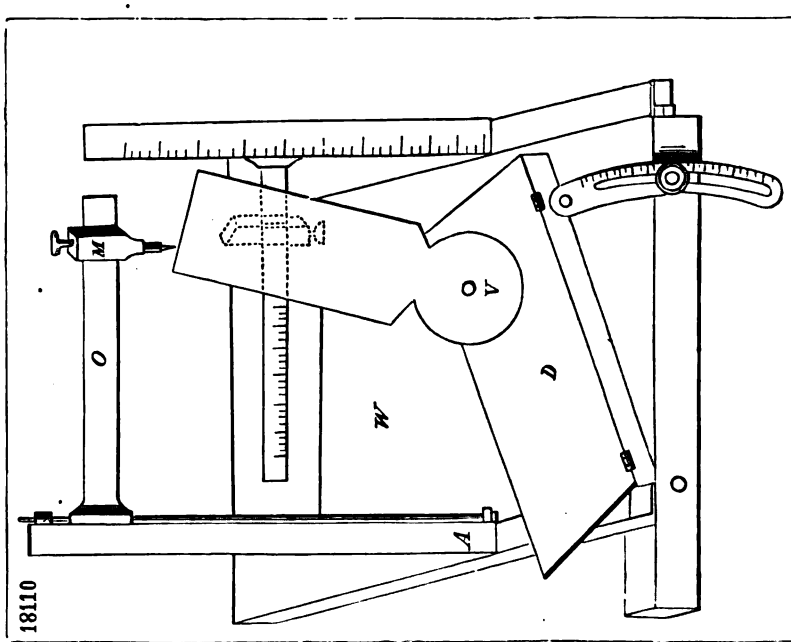
18110

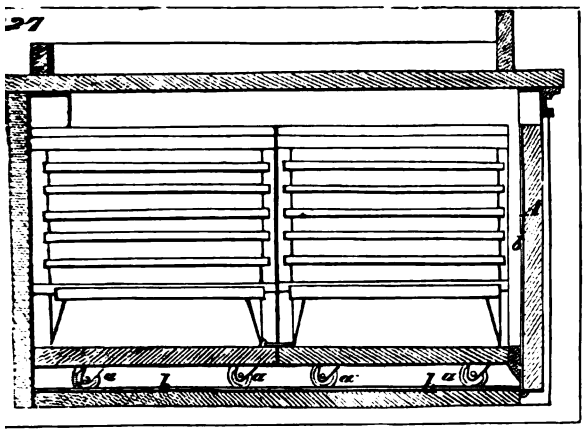

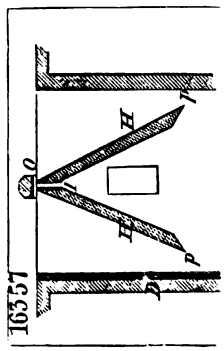

18118

fig.1

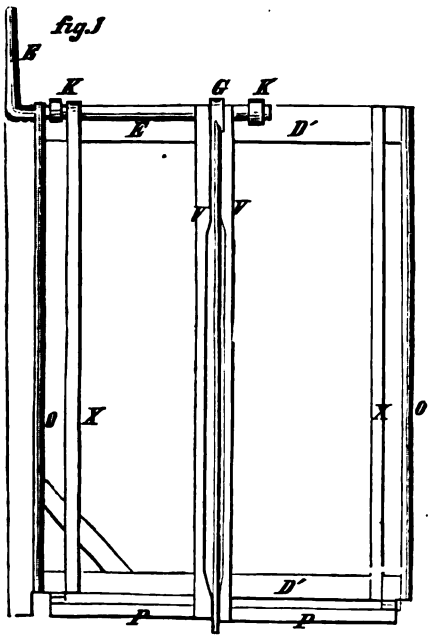

fig.2

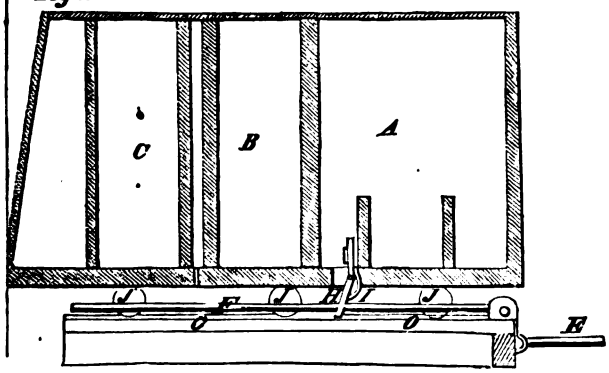

16563 *fig. 1*

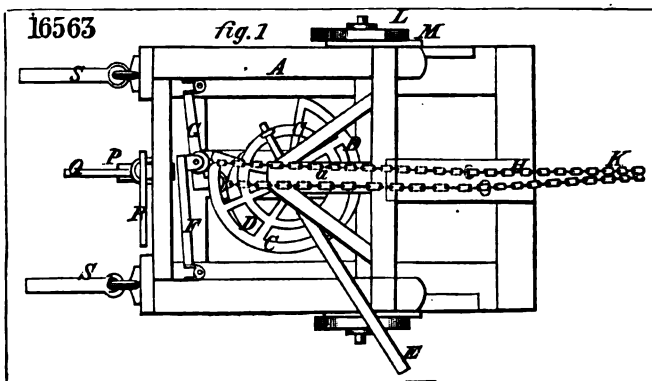

fig. 2

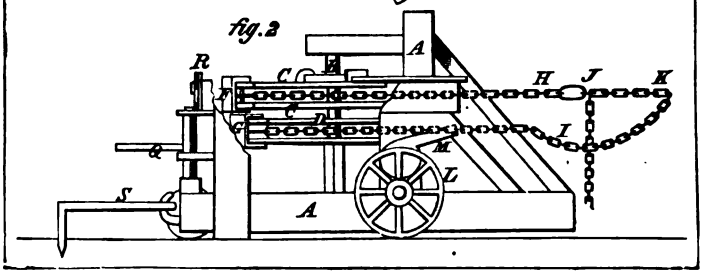

17528

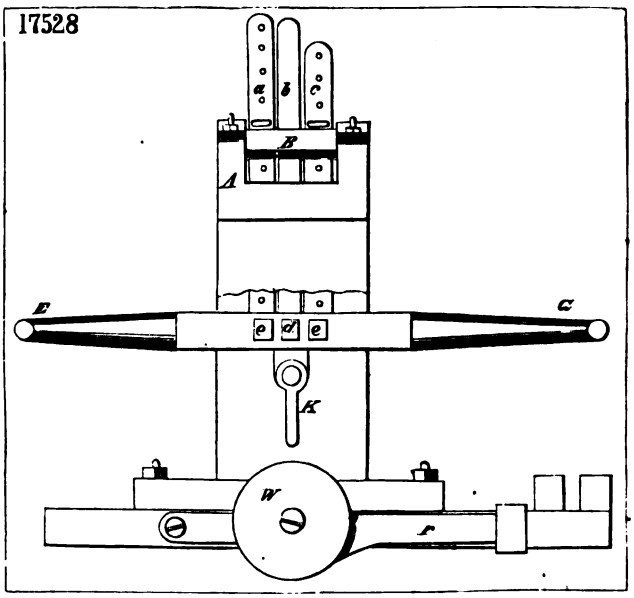

16579 *fig. 1*

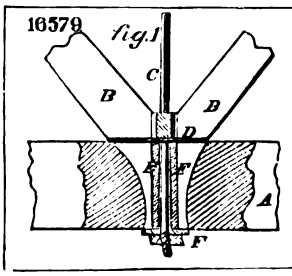

fig. 2

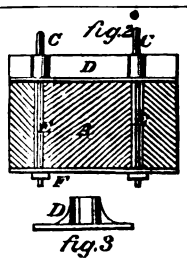

fig. 3

6383

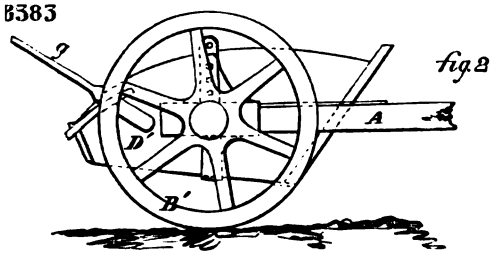

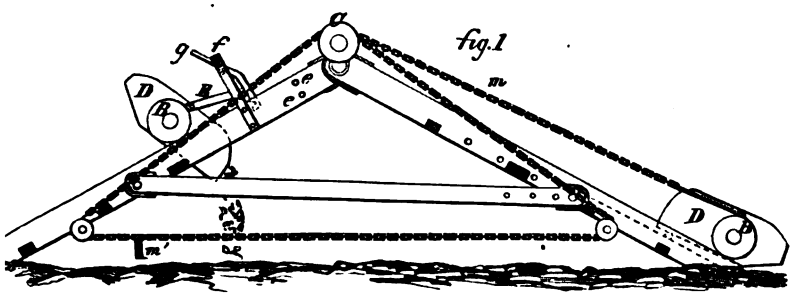

17512

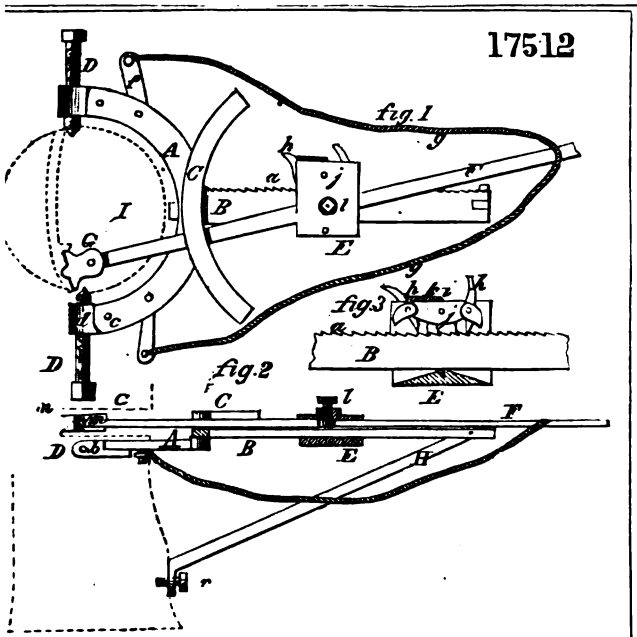

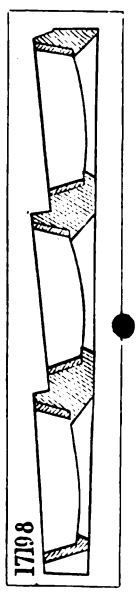

17199

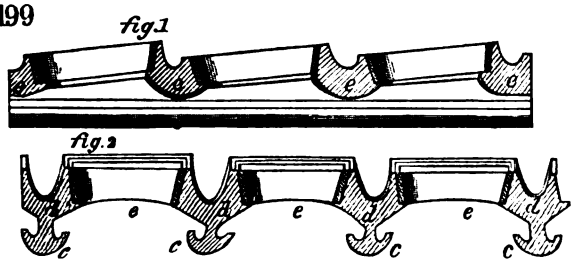

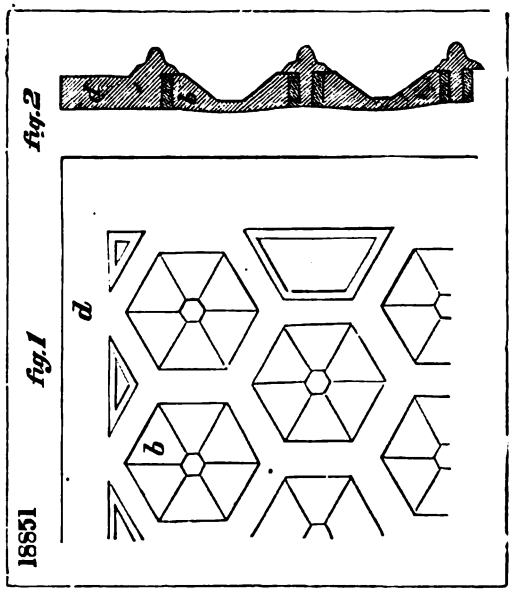
fig.2
fig.1
d
b
18851

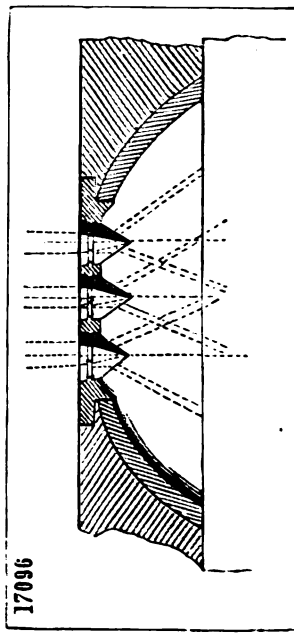
17096

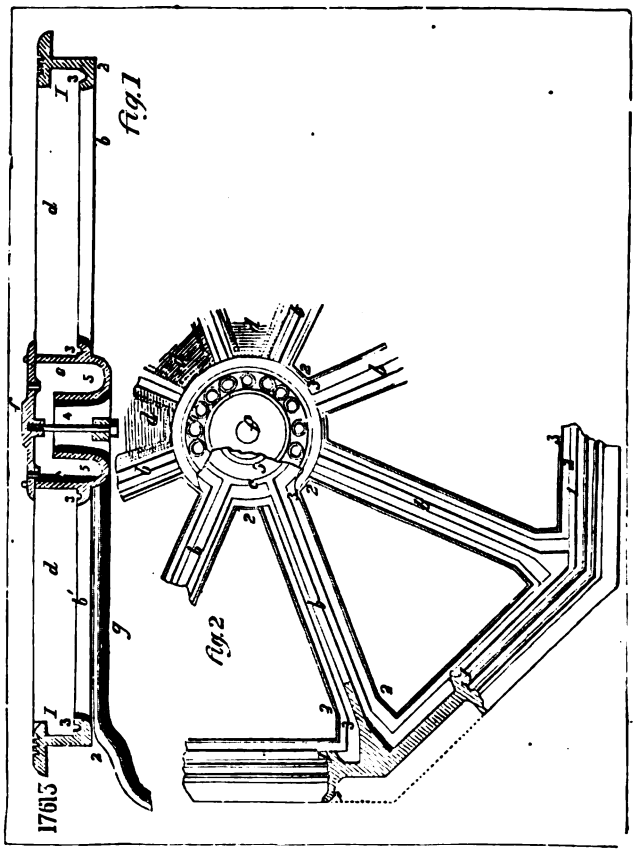
fig.1
fig.2
17615

16451

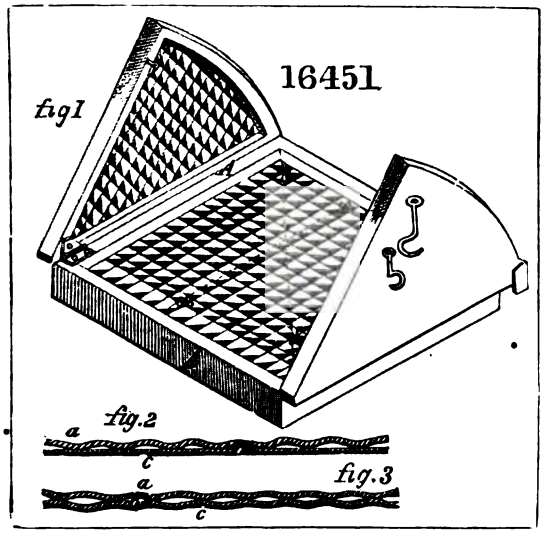
fig1
A
fig.2
a
c
a
fig.3
c

17097

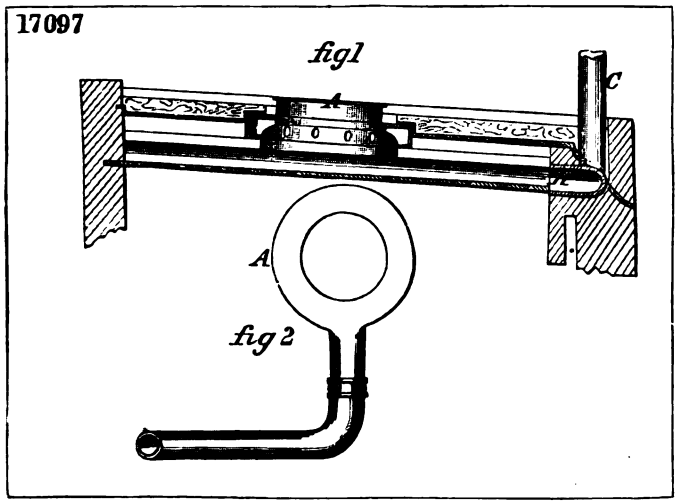
fig1
A
C
A
fig 2

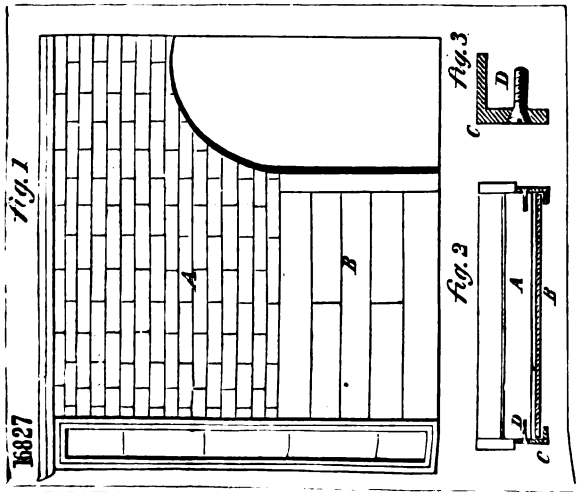
fig.1
A
B
16827
Fig.3
C
D
Fig.2
A
B
D
C

16548

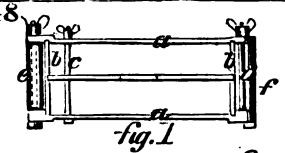

fig. 1

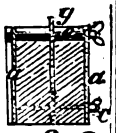

fig. 3

fig. 2

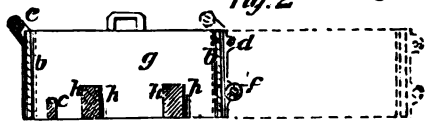

17937

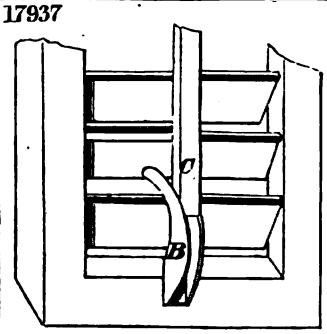

18569

fig. 1

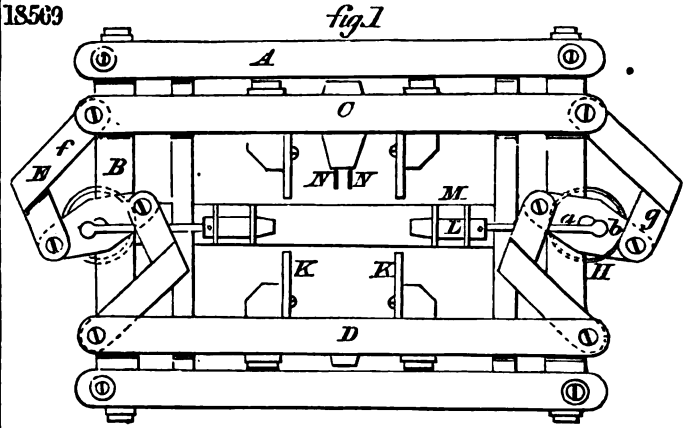

fig. 2

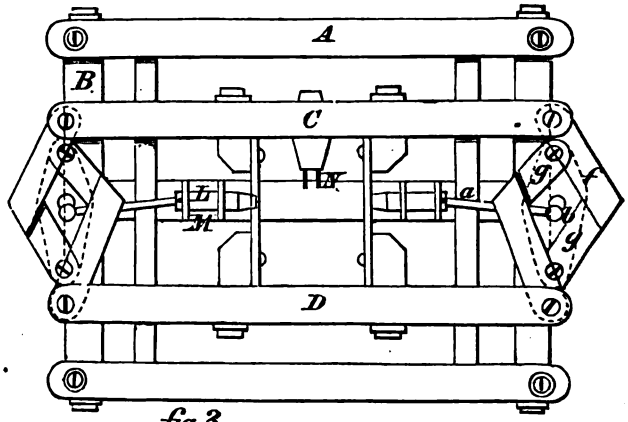

fig 3

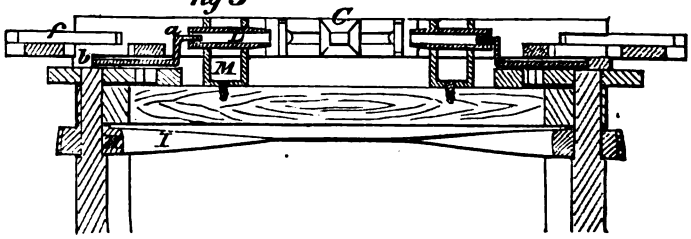

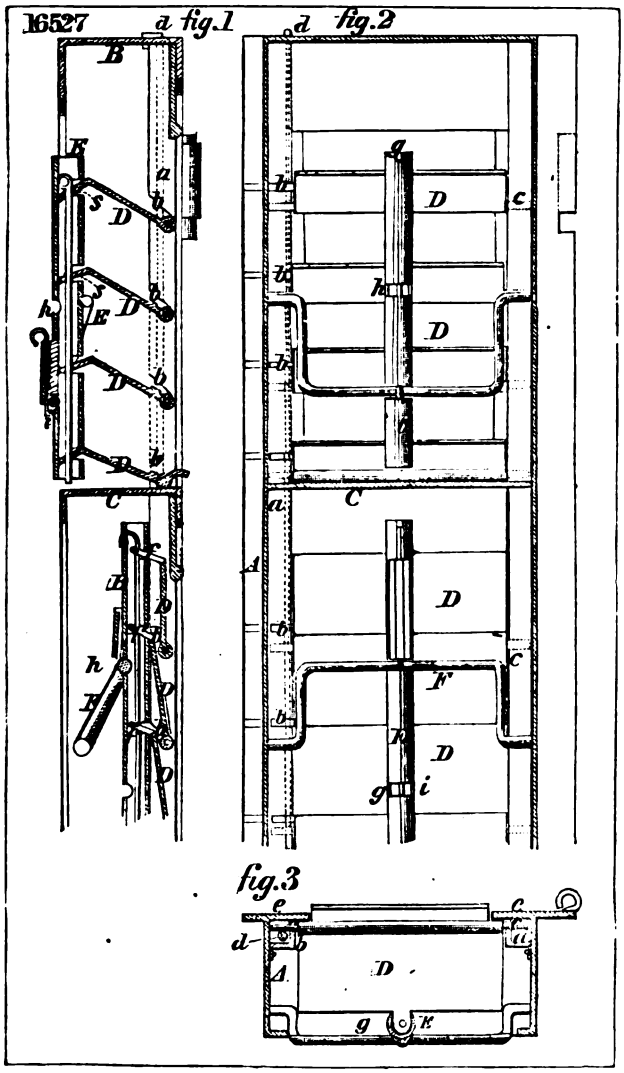
16527
a fig.1
d fig.2
fig.3

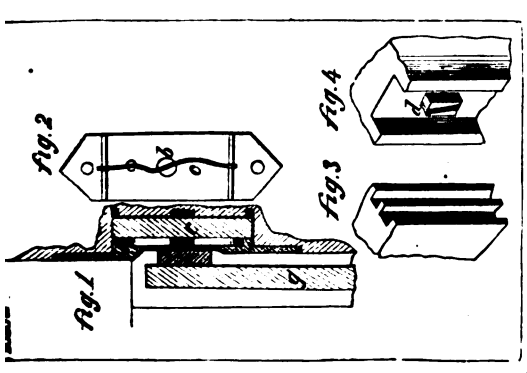
fig.2
fig.4
fig.3
fig.1

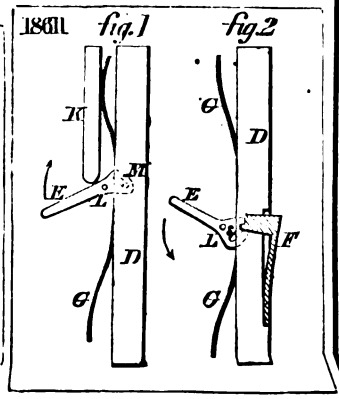
18611
fig.1
fig.2

17938

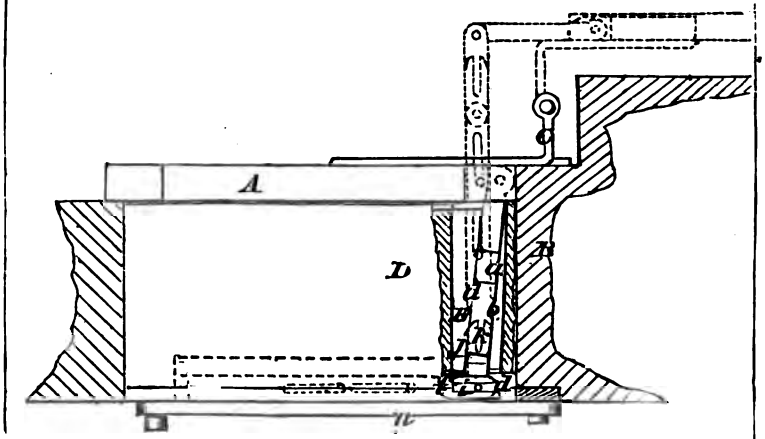

16966

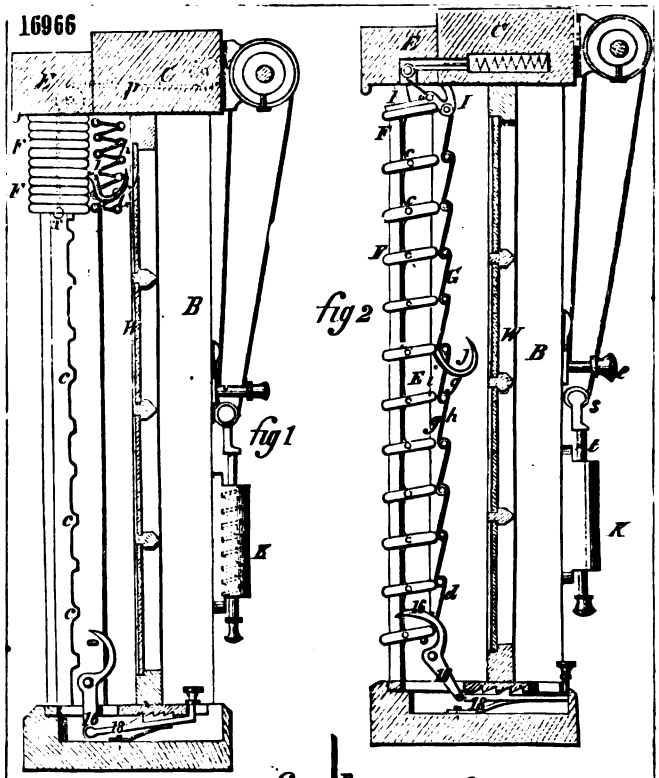

16632

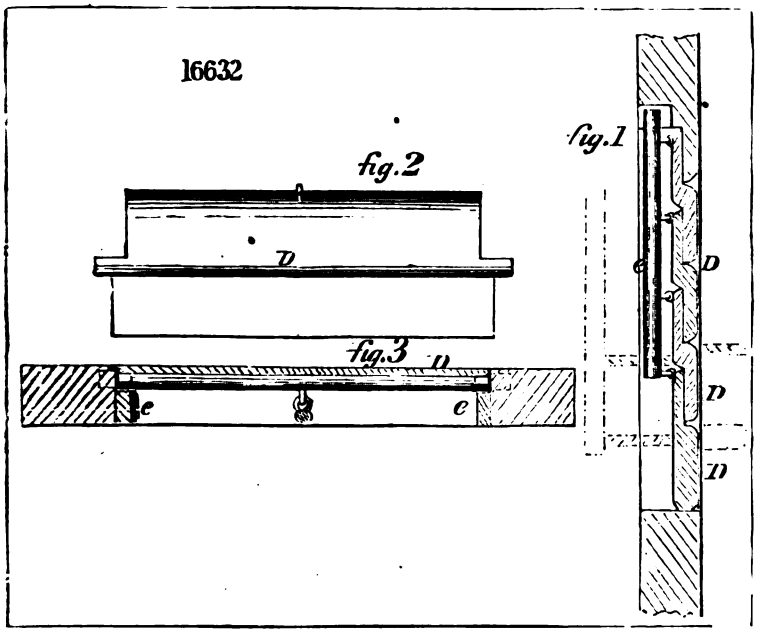

17922

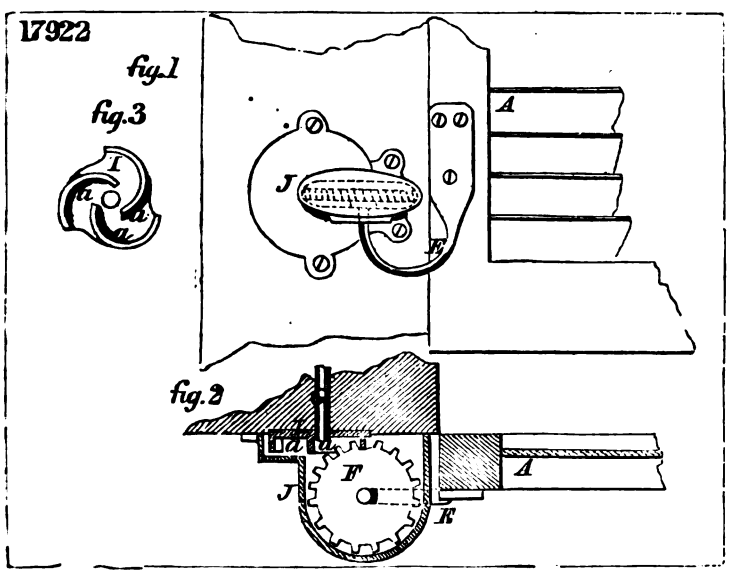

16559

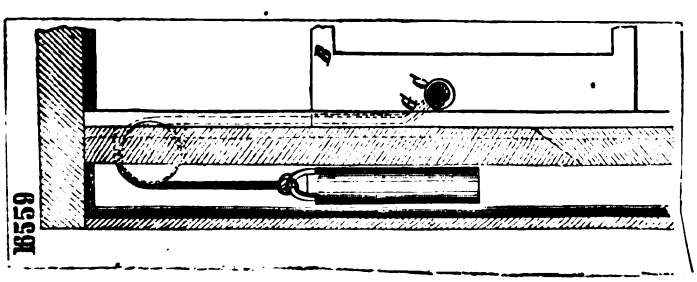

18248

fig 1

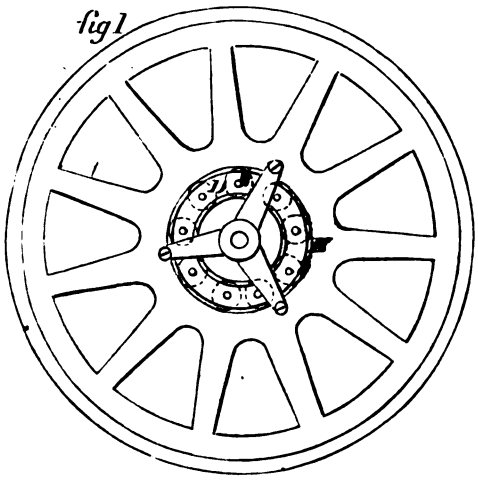

16891 fig. 1

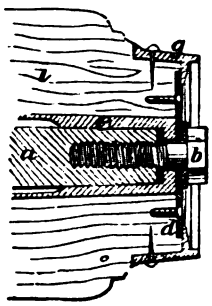

fig 2

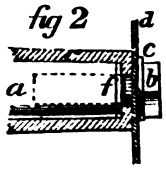

16661

fig. 1

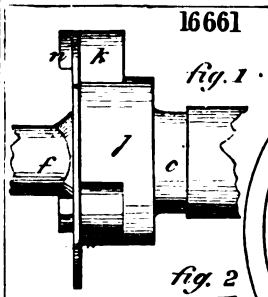

fig. 3

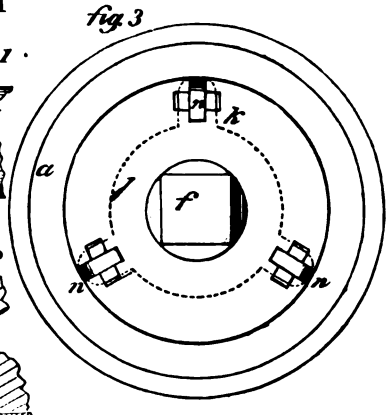

fig. 2

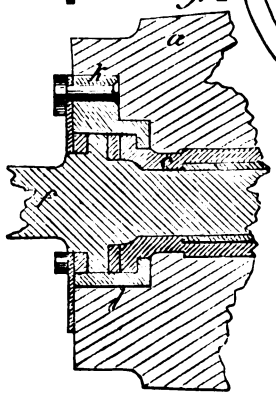

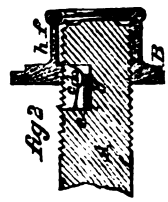

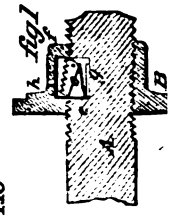

17410

5

fig.1

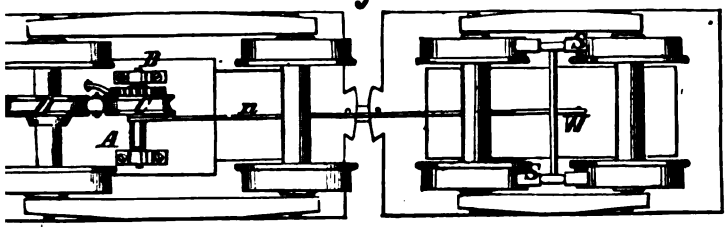

fig.2

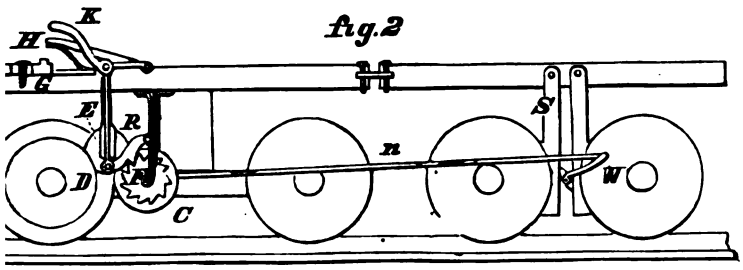

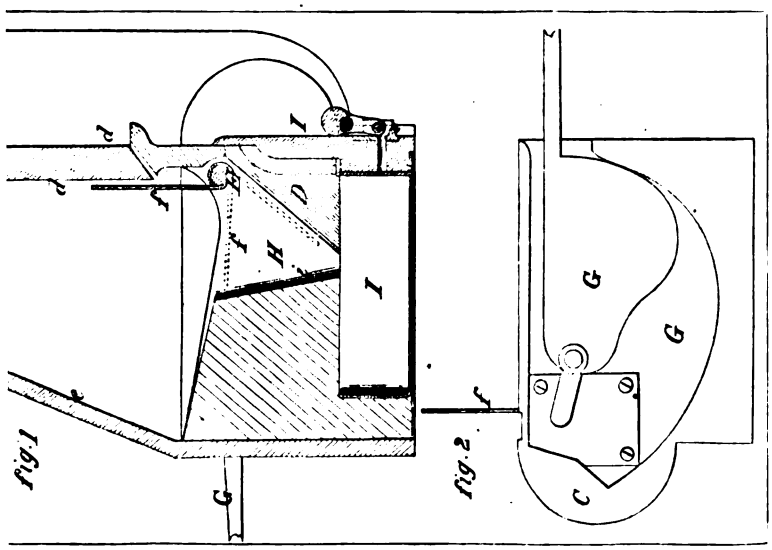

17058

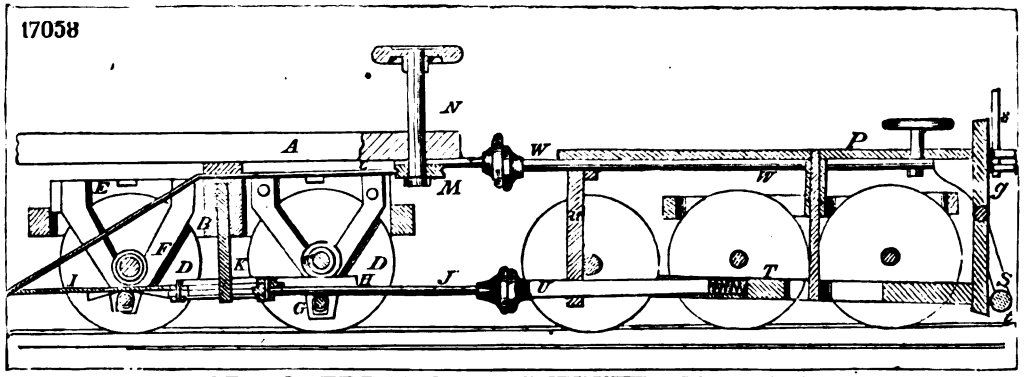

17257

fig. 1

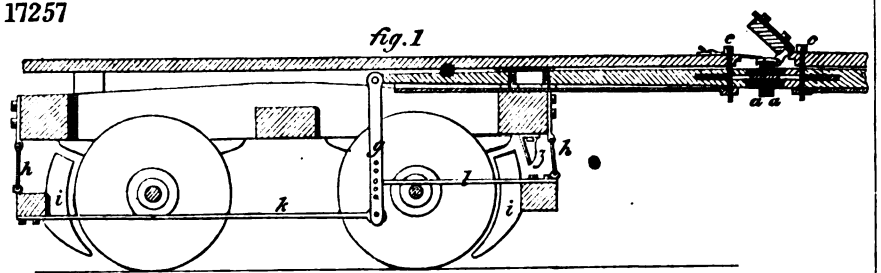

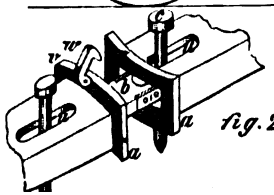

fig. 2

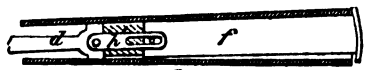

fig. 3

ad18715

fig 3

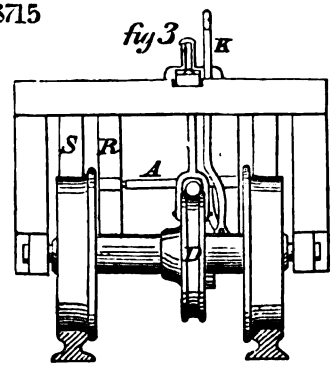

18435

fig. 1

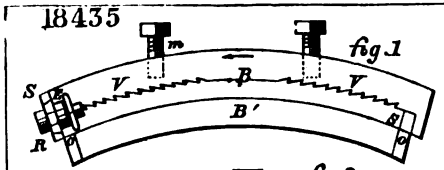

fig. 2

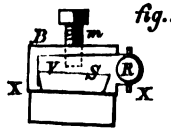

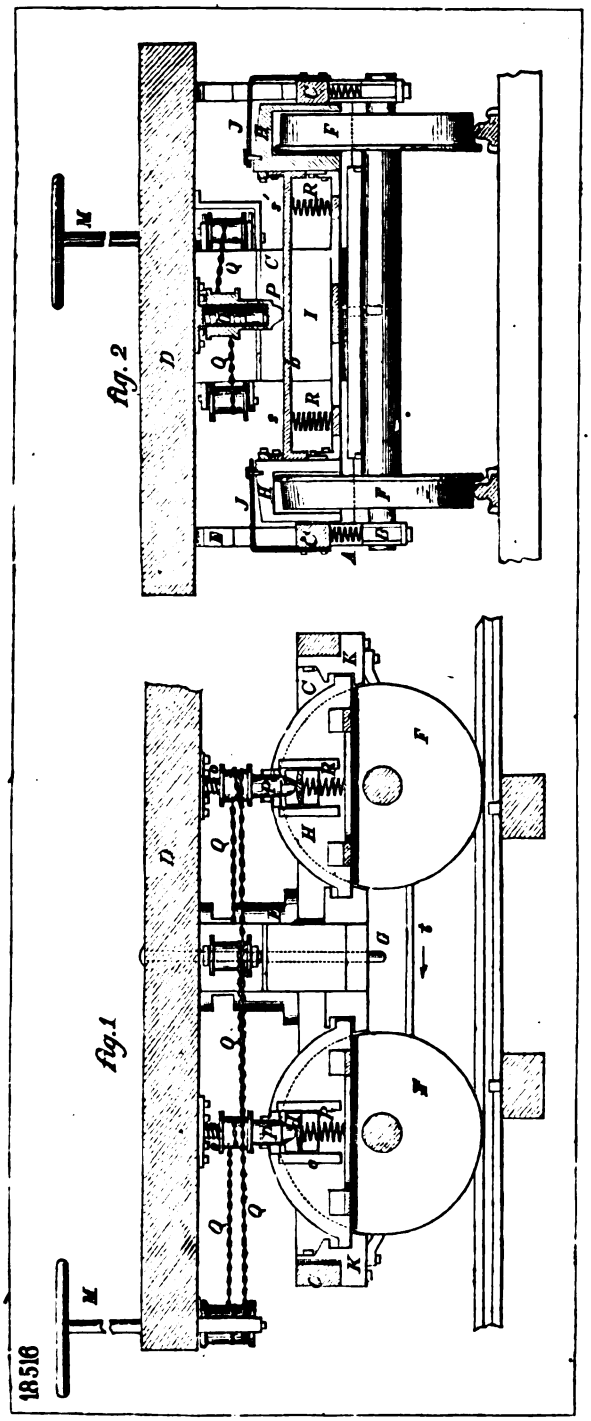
Fig. 2
Fig. 1
18516

17763

fig.1

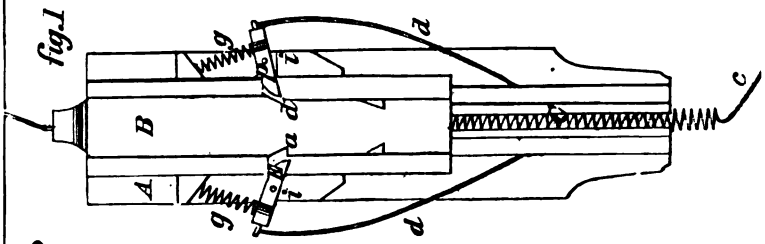

fig.2

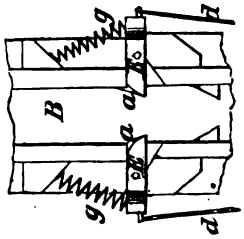

18150

fig.1

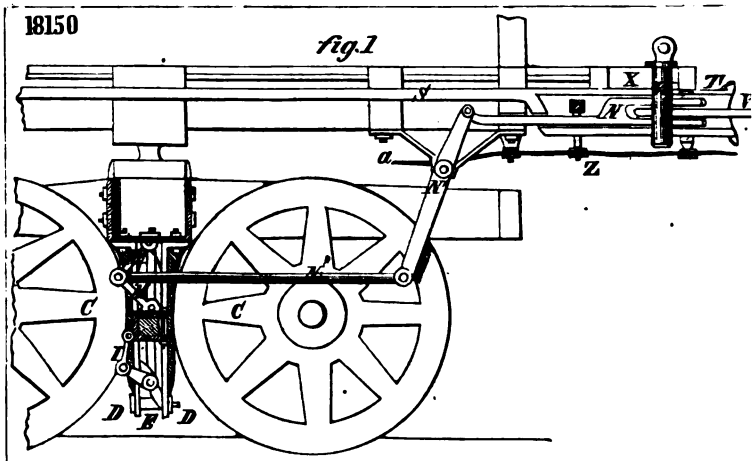

fig.2

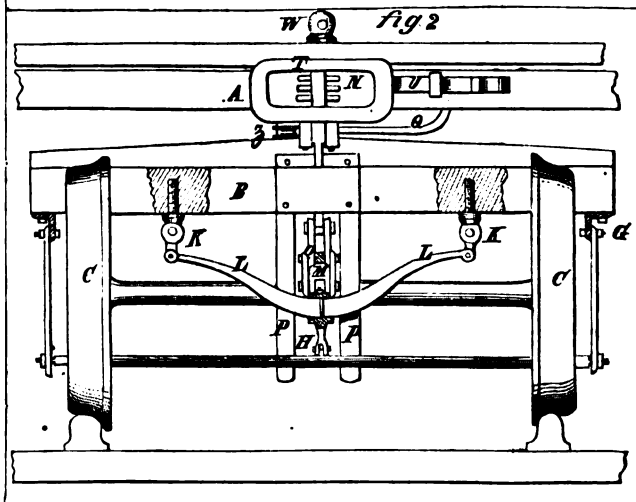

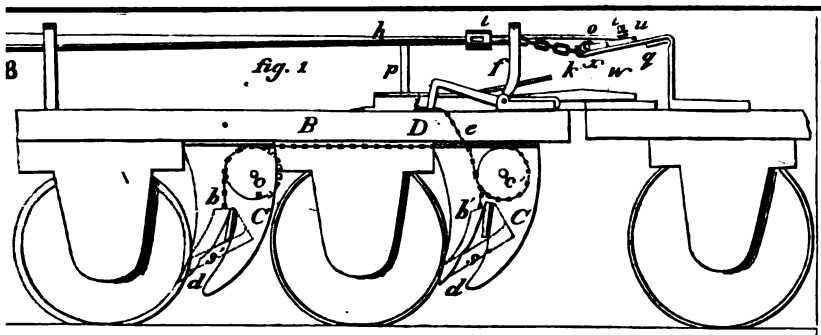

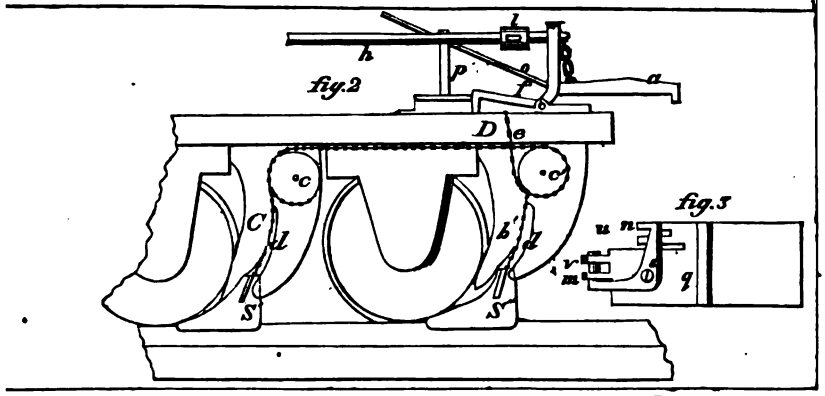

17983

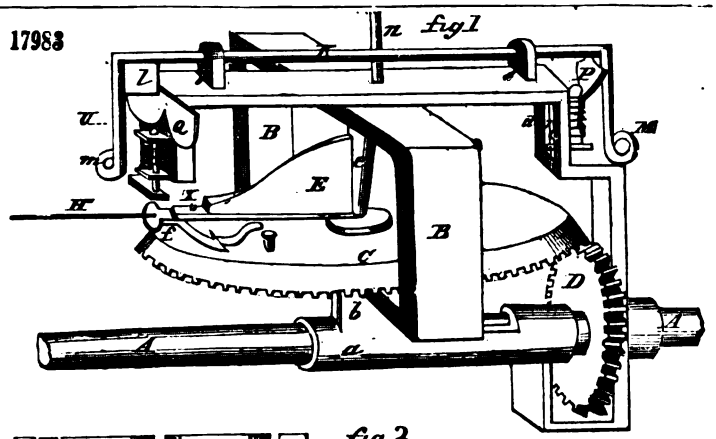

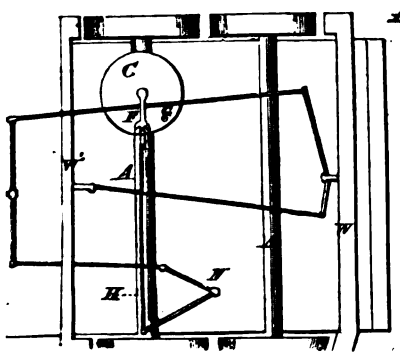

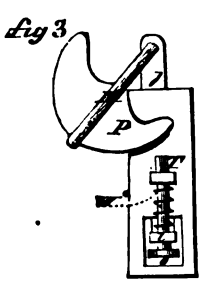

17004

fig. 1

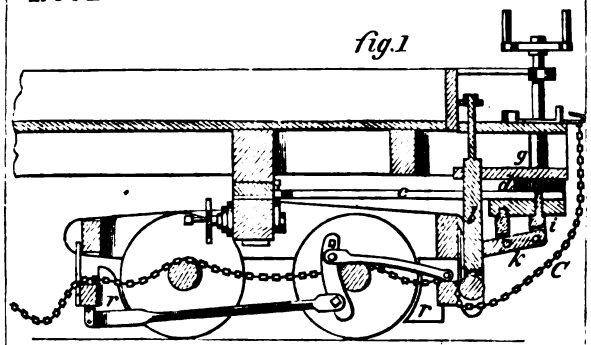

fig. 2

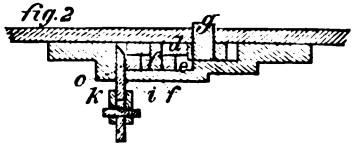

17845

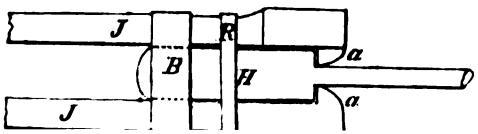

18132

fig. 1

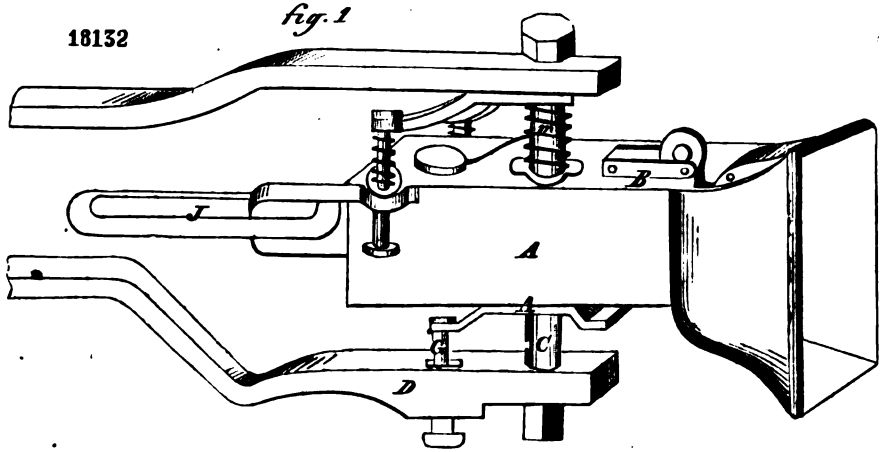

fig. 2

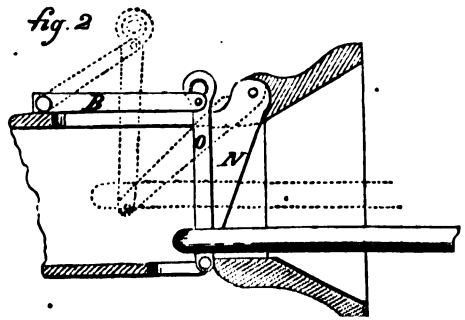

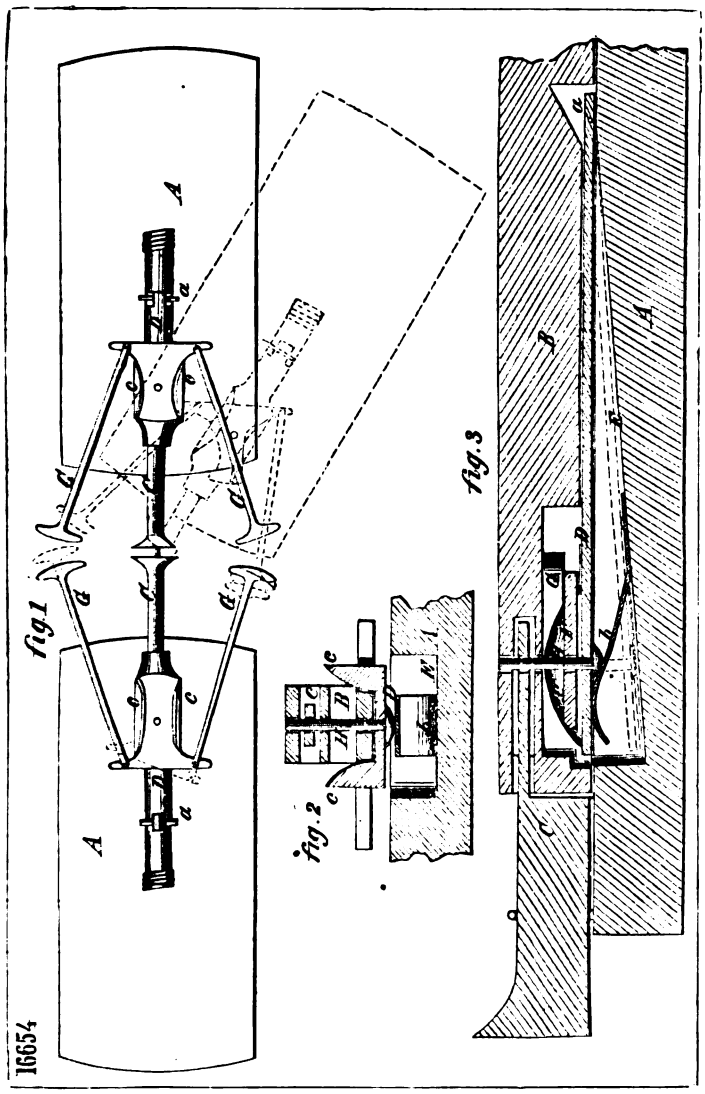
fig.1
fig.2
fig.3
16654

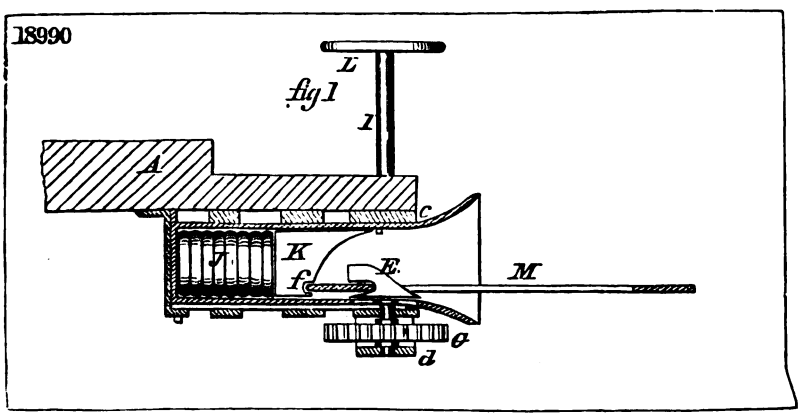
18990
fig 1
L
I
A
c
K
J
f
E
M
G
d

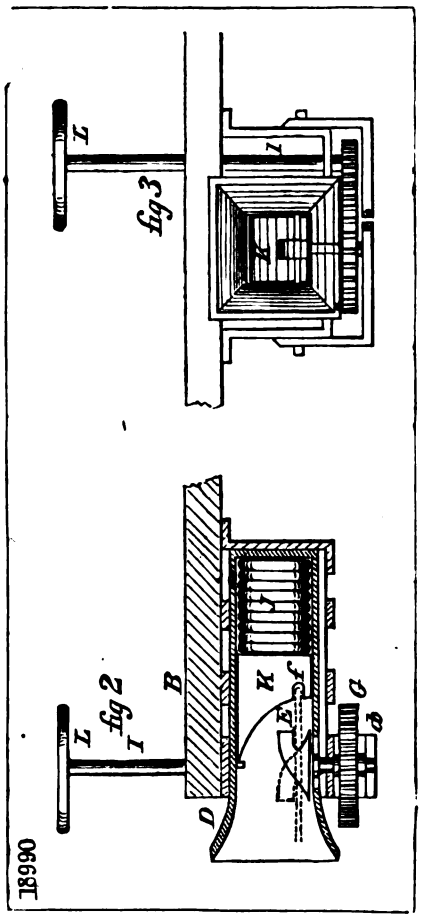

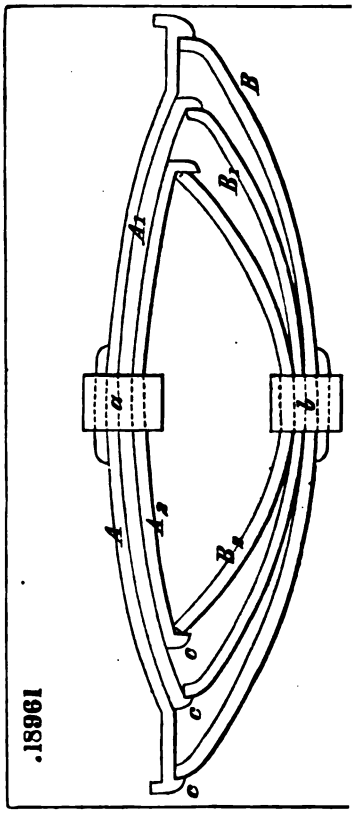

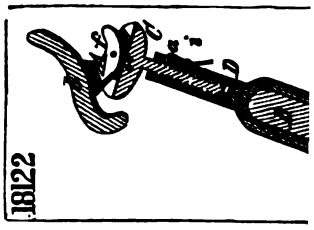

17796

fig. 1

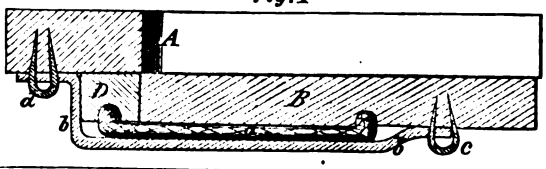

fig. 2

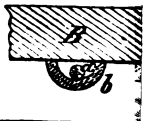

16724

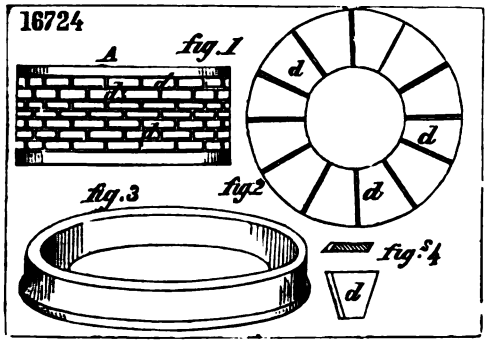

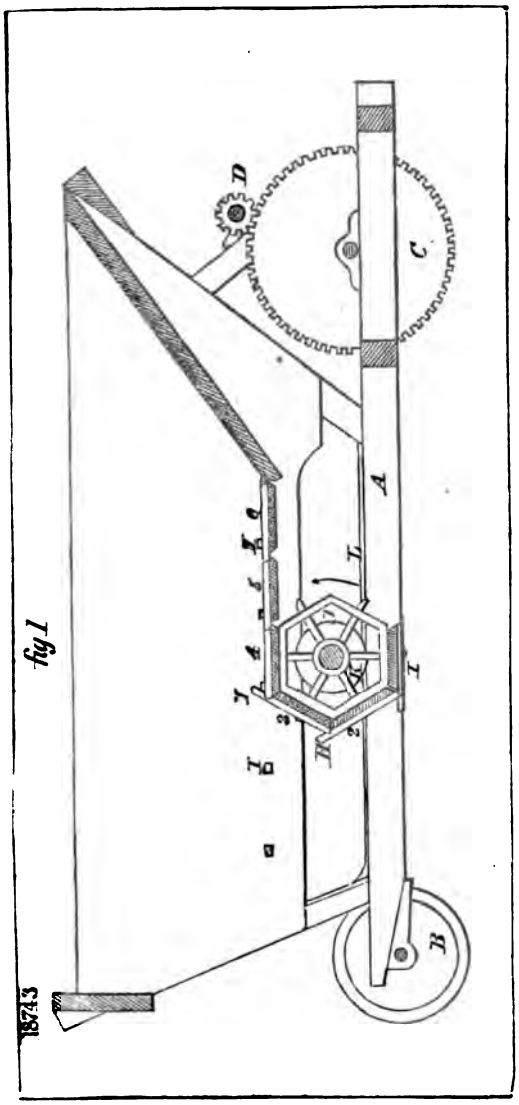

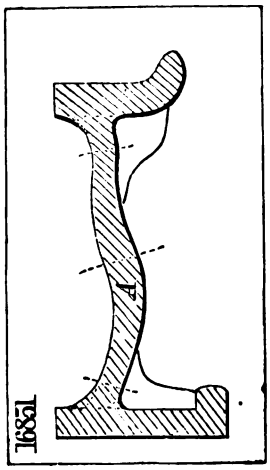

17442

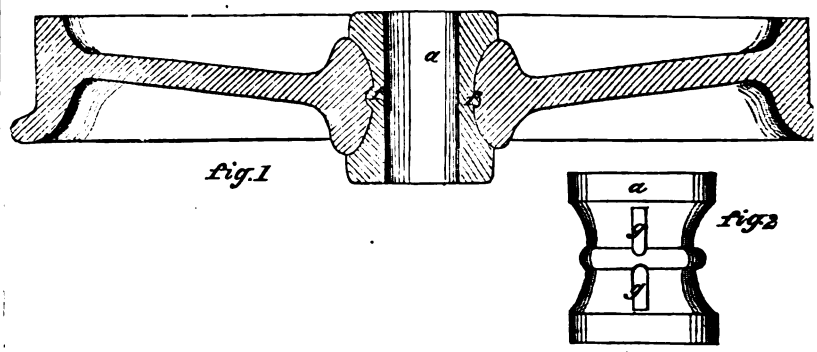

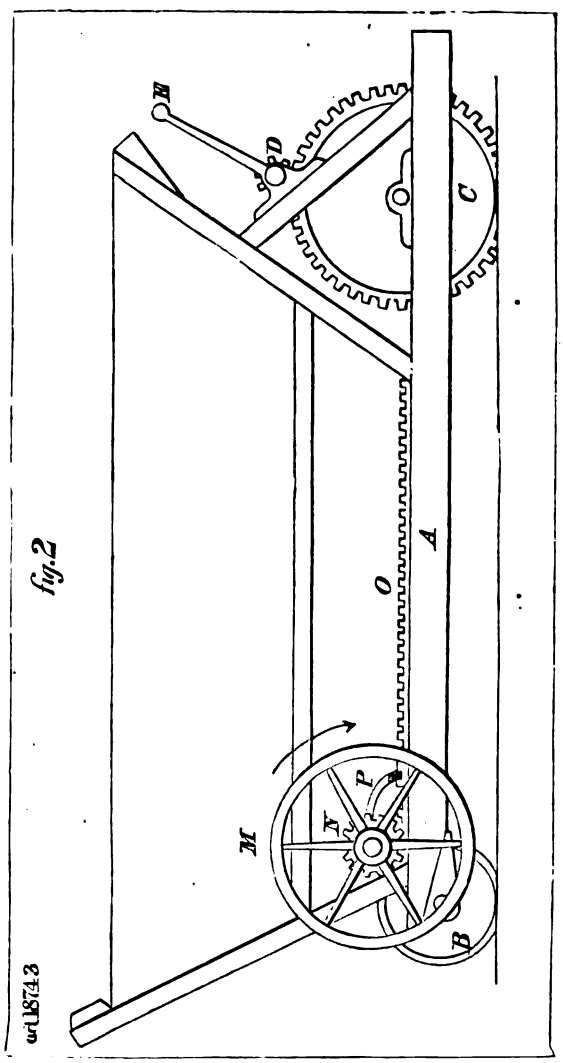

17250

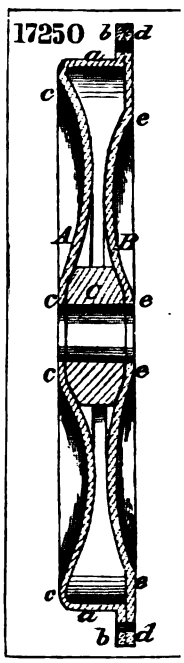

fig.1

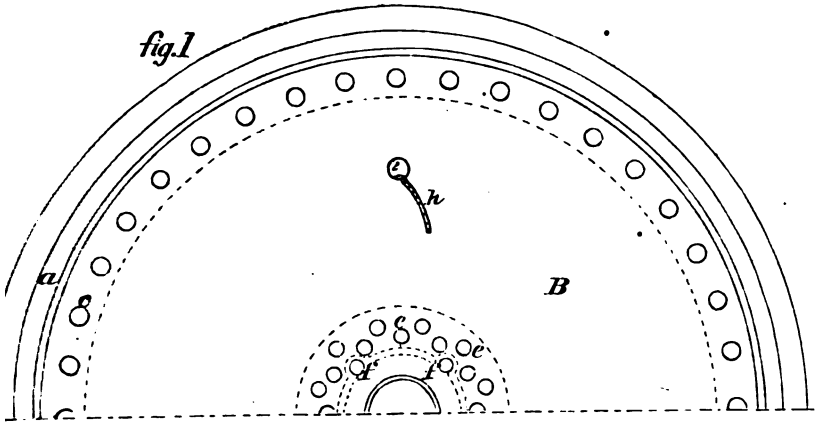

fig.2

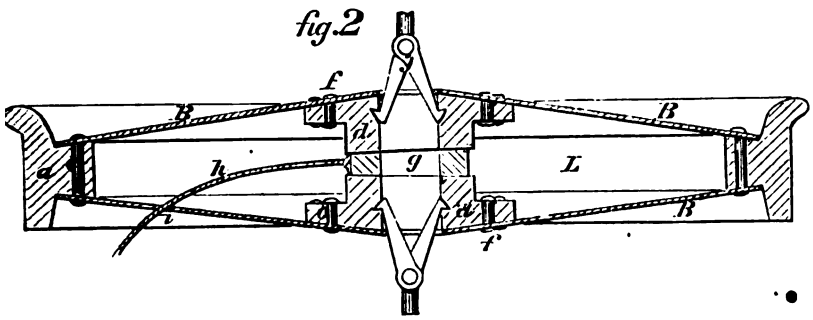

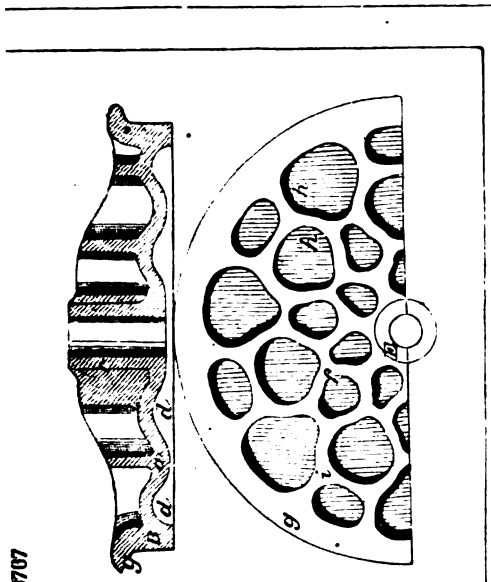

18707

16916 fig.1 fig.2

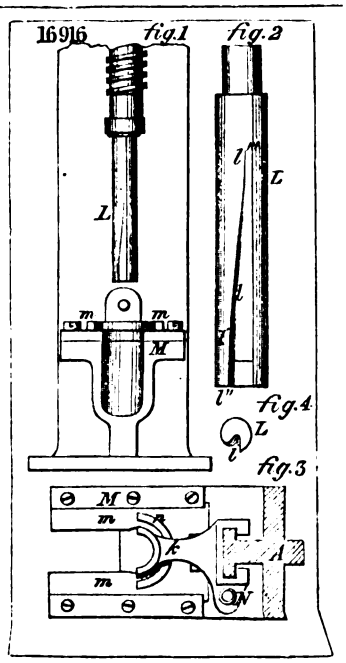

16915.

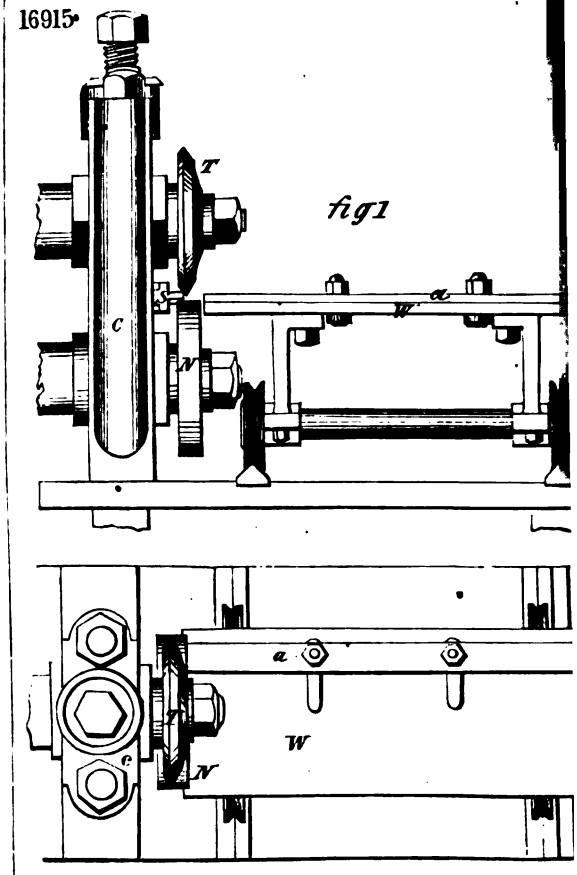

18515.

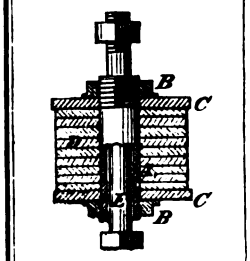

18375.

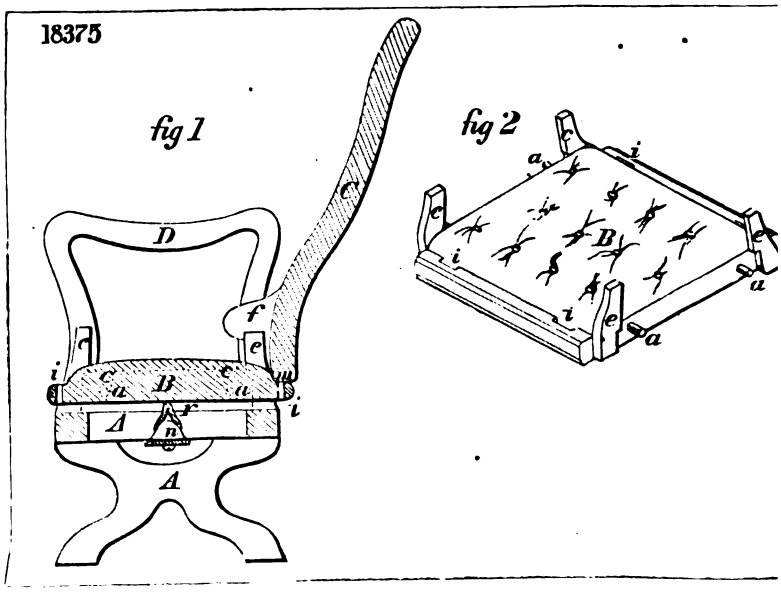

17794

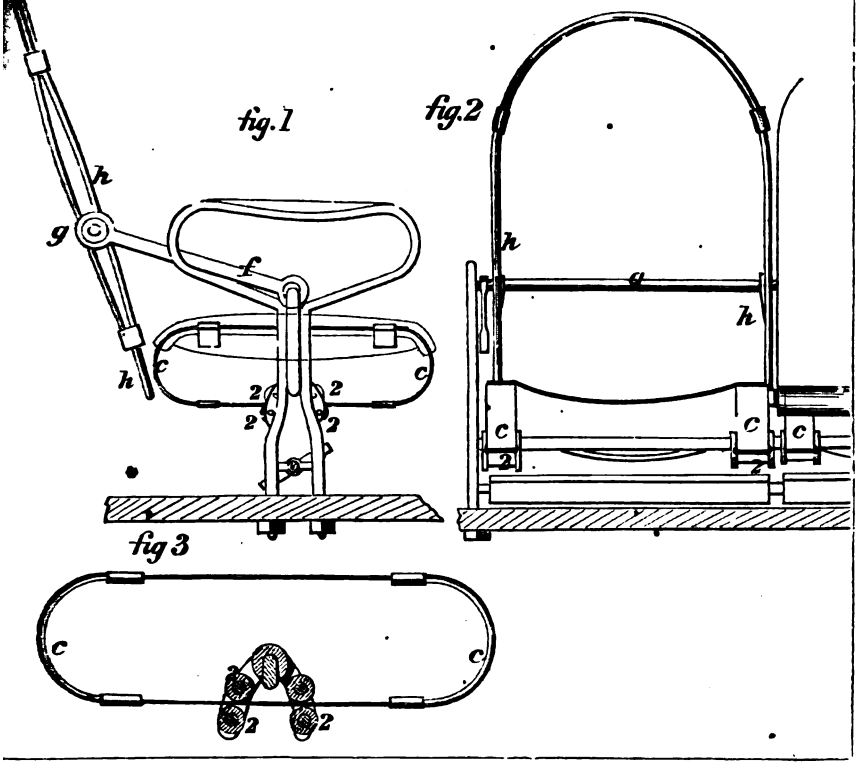

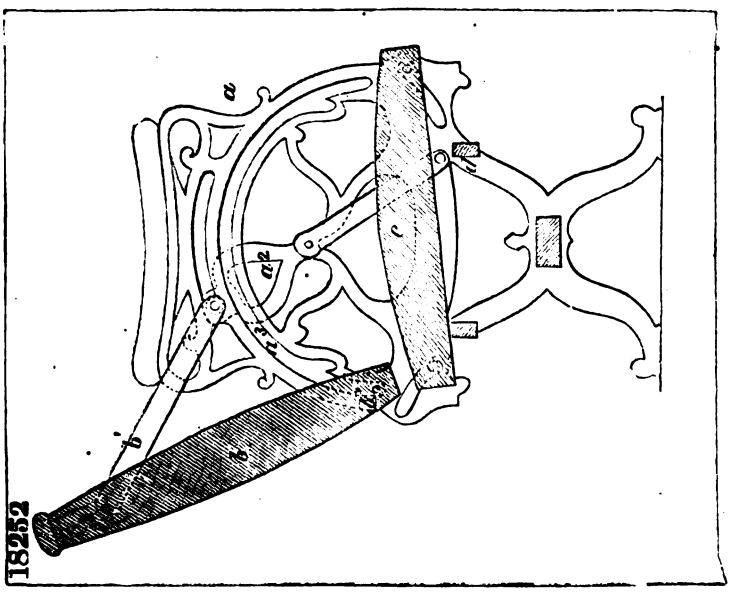

17506

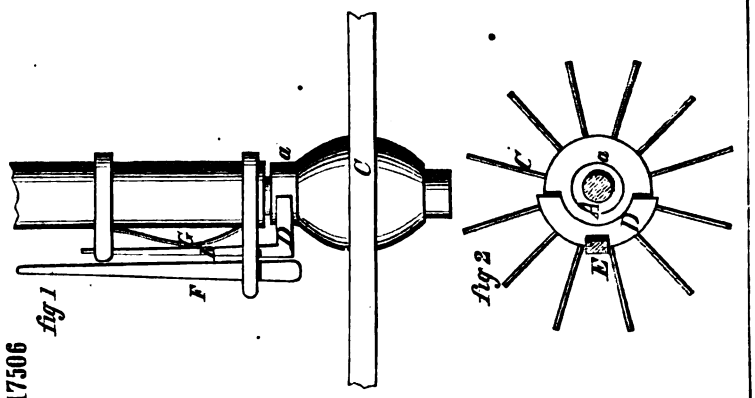

18421

fig. 1

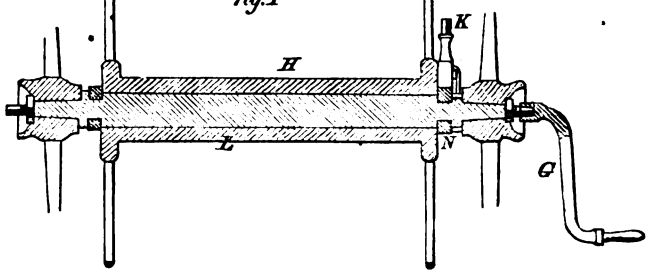

fig. 2

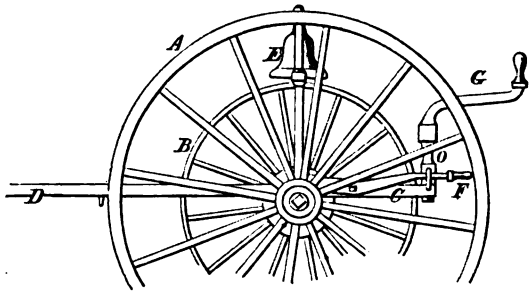

fig. 3

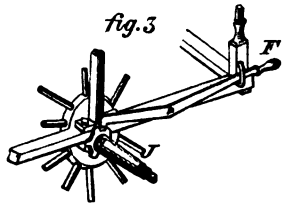

17376

fig 1

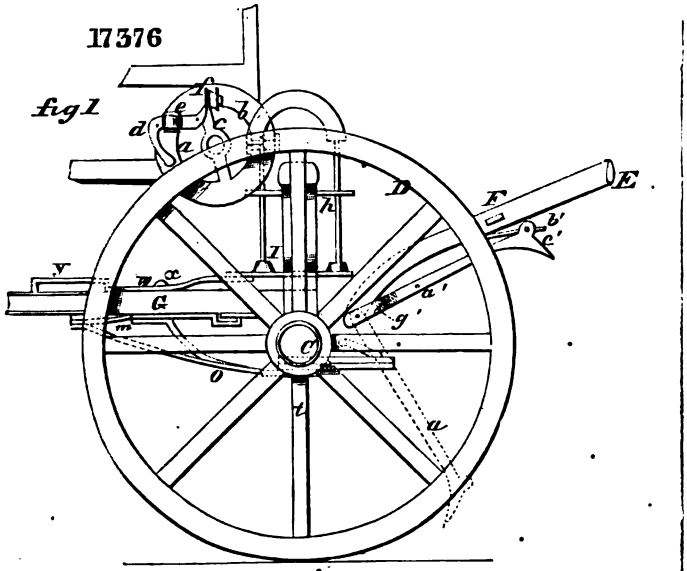

fig. 2

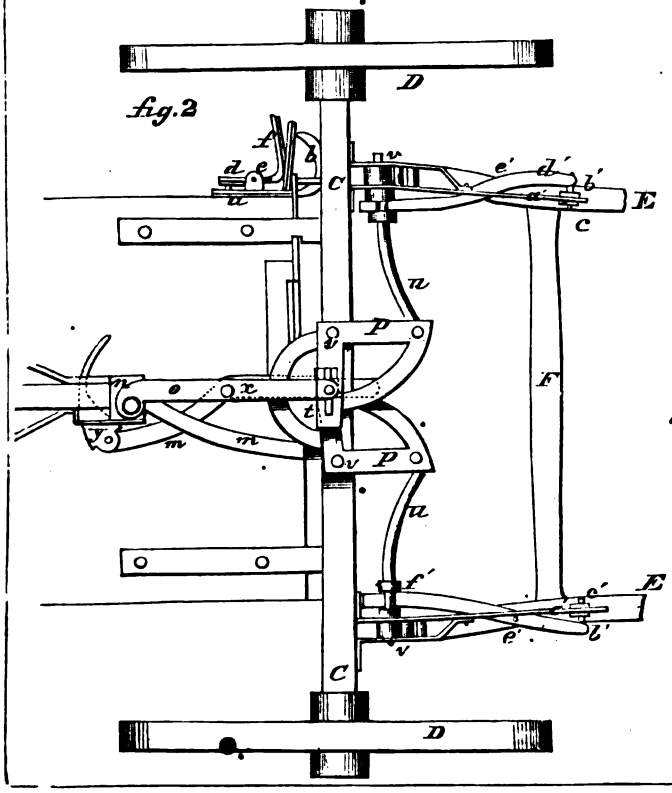

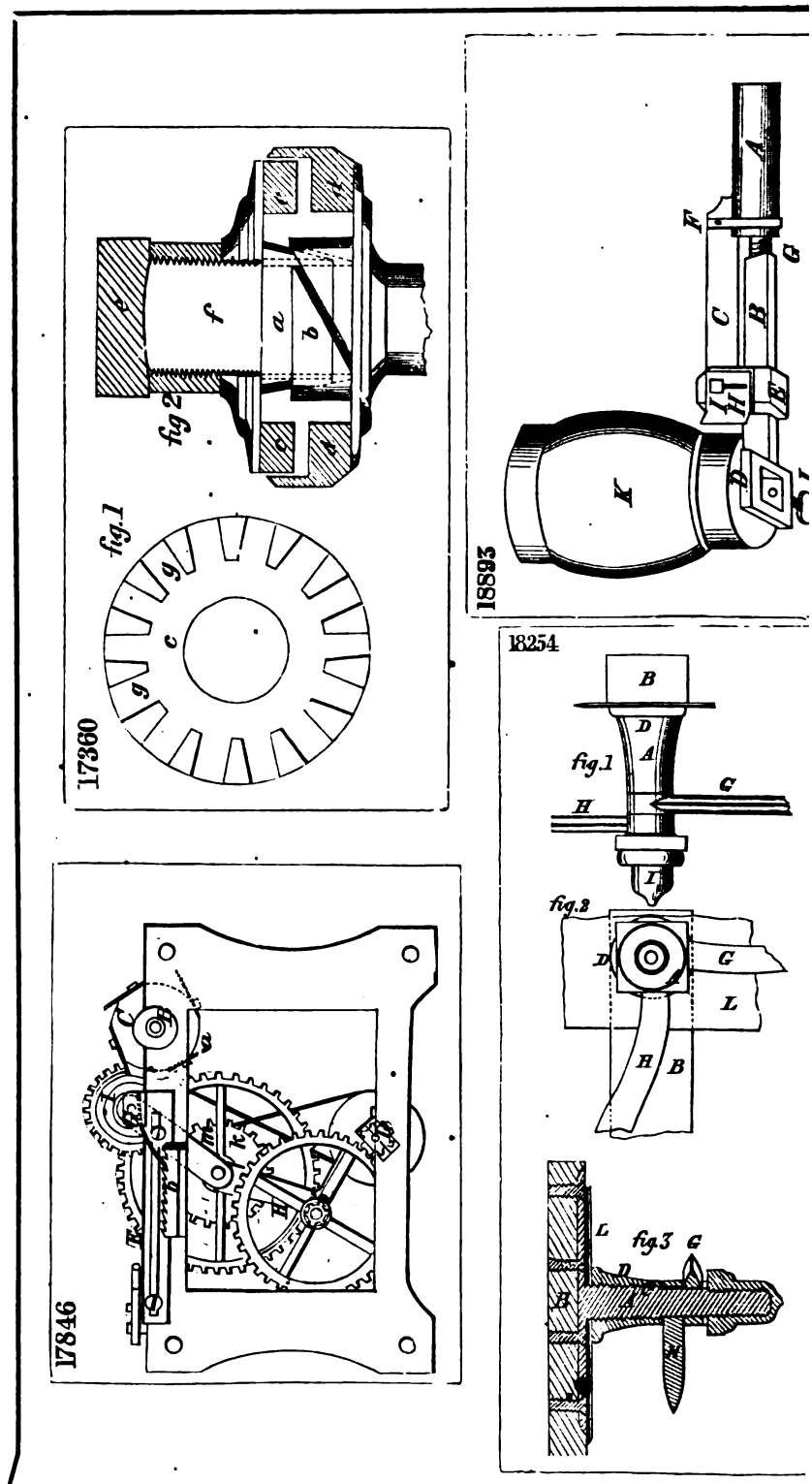
17360
fig.1
fig.2
18893
18254
fig.1
fig.2
fig.3
17846

302

fig.1

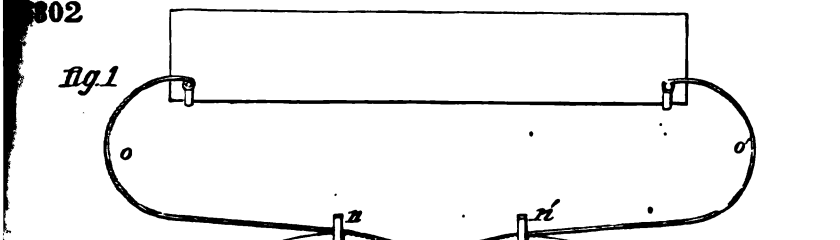

fig.2

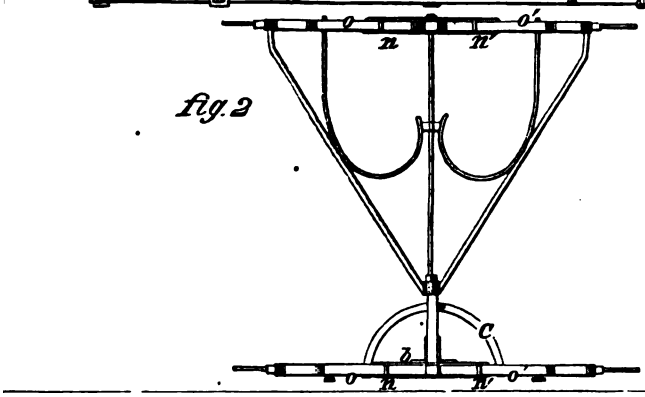

16986

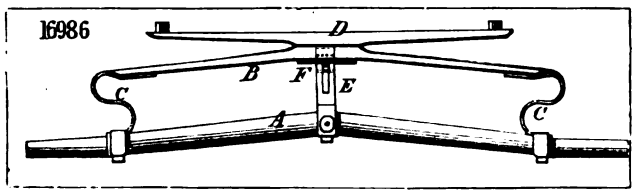

18451

fig.1

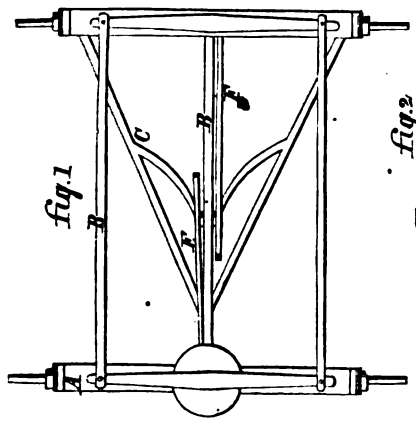

fig.2

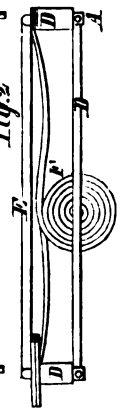

fig.3

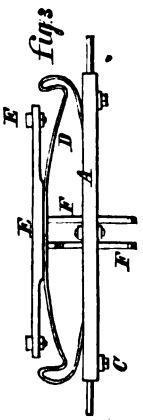

16919

fig.1

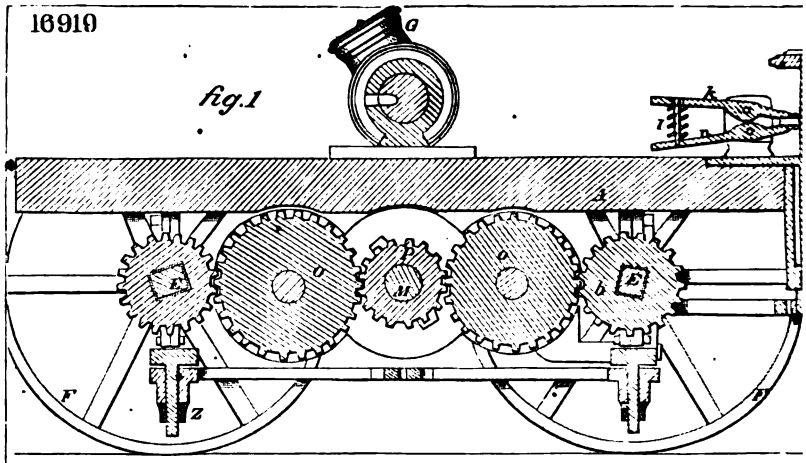

fig.3

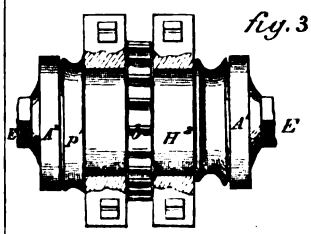

fig.4

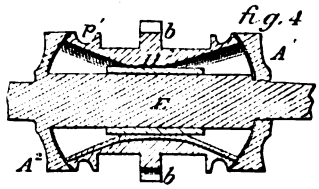

fig.2

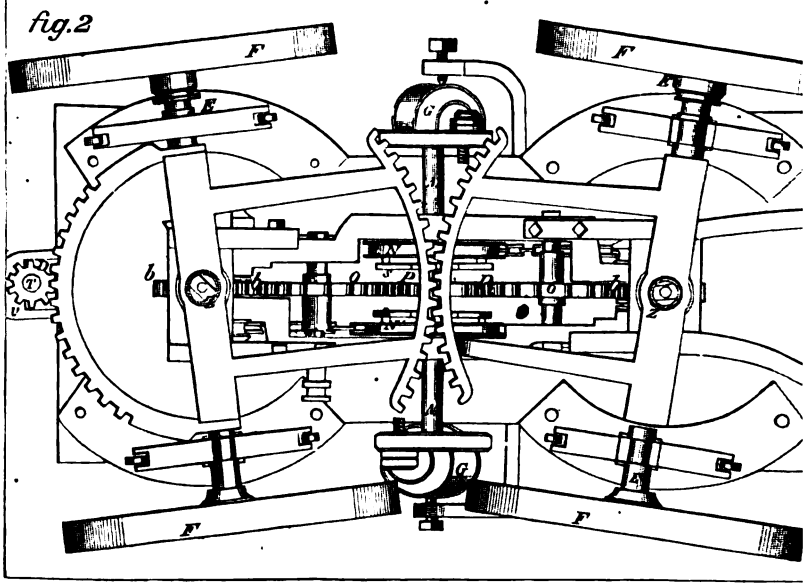

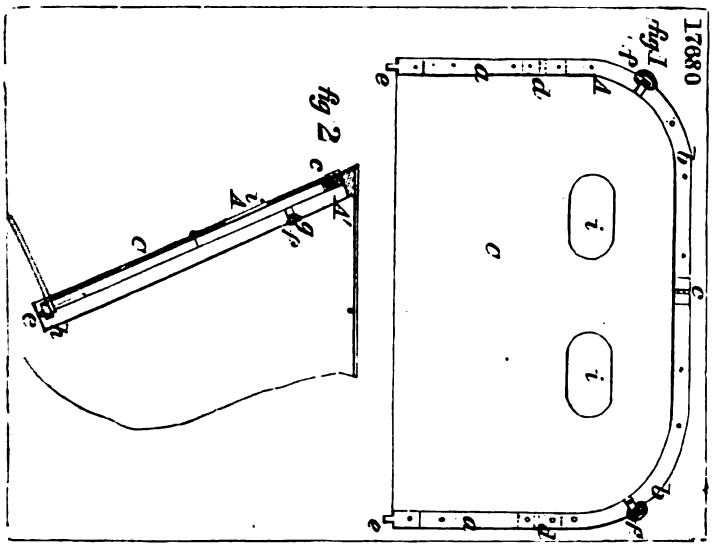
17880
fig 1
fig 2

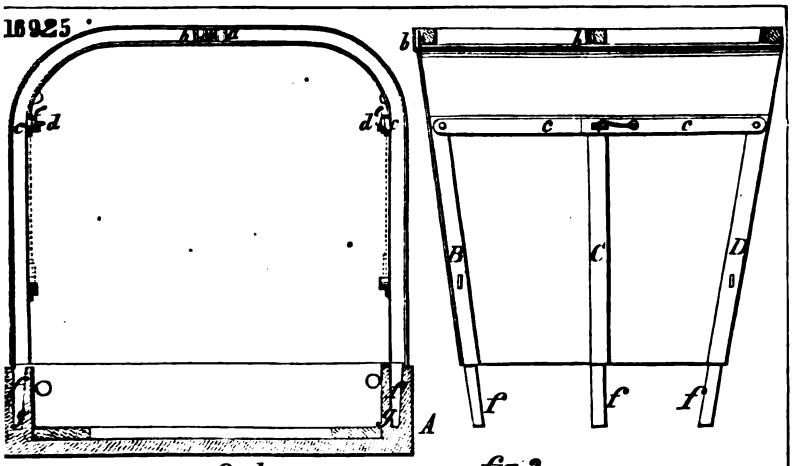
15925
fig 1
fig 2

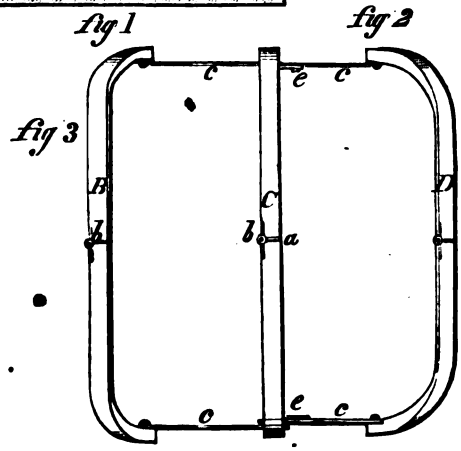
fig 3

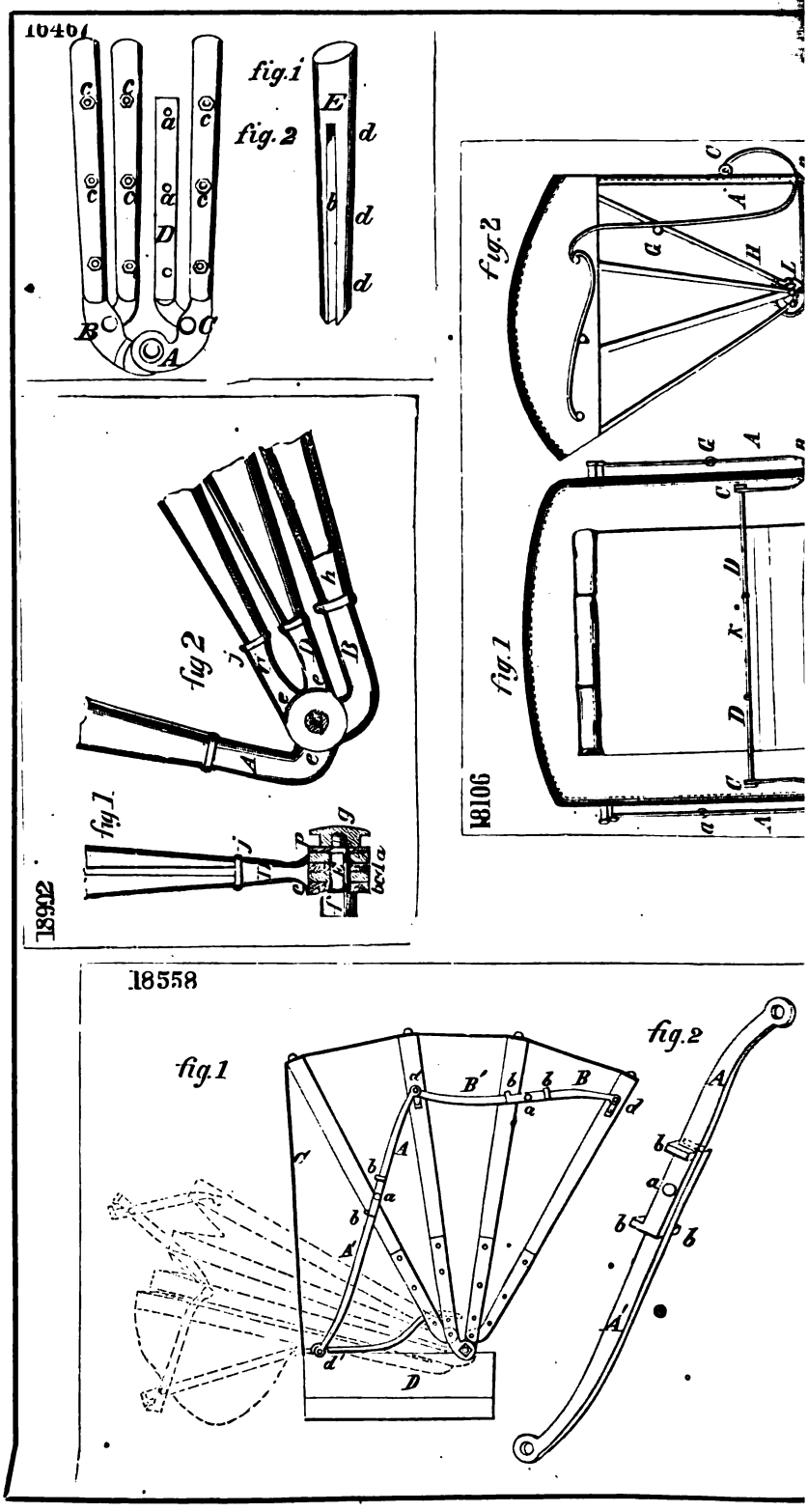
18467
fig.1
fig.2
18902
fig.1
fig.2
18106
fig.1
fig.2
18558
fig.1
fig.2

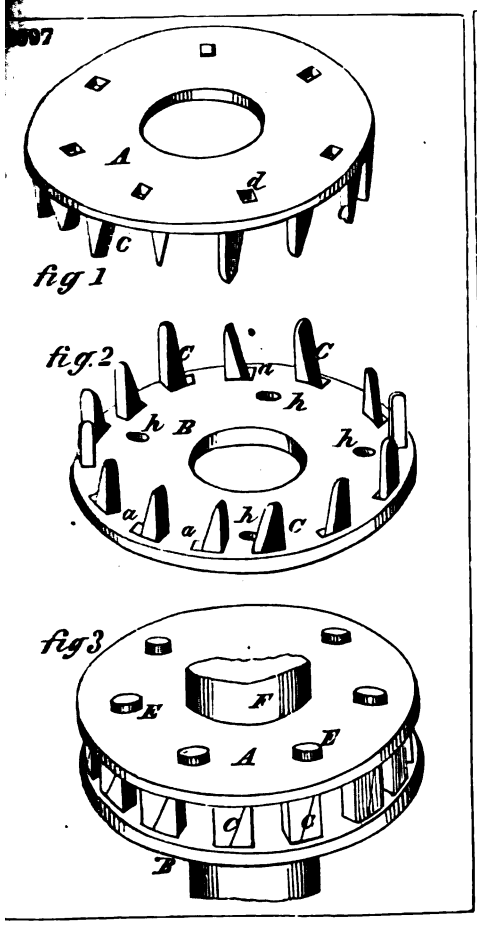
fig 1
fig.2
fig3

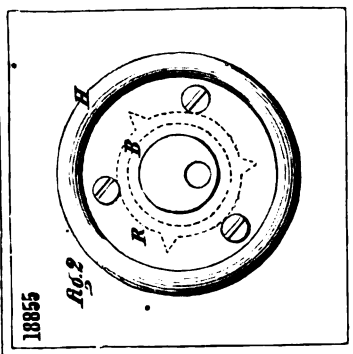
18855
Fig.2

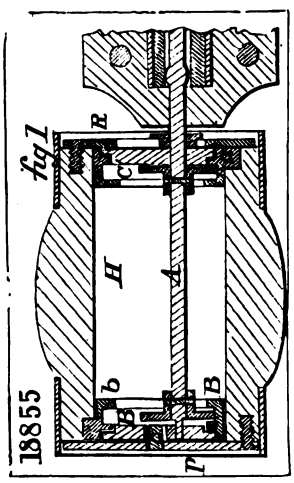
fig.1
18855

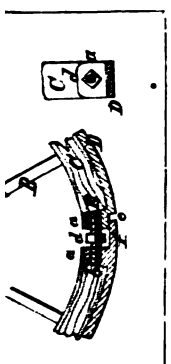

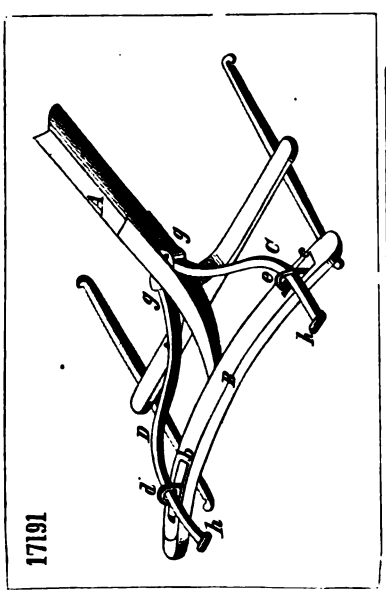
17191

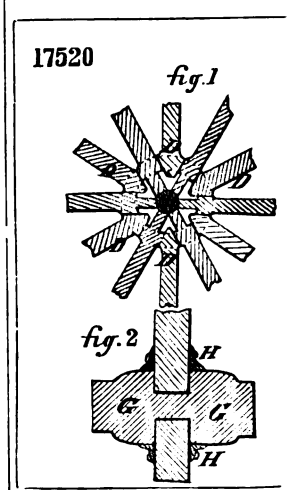
17520
fig.1
fig.2

16353

fig.1

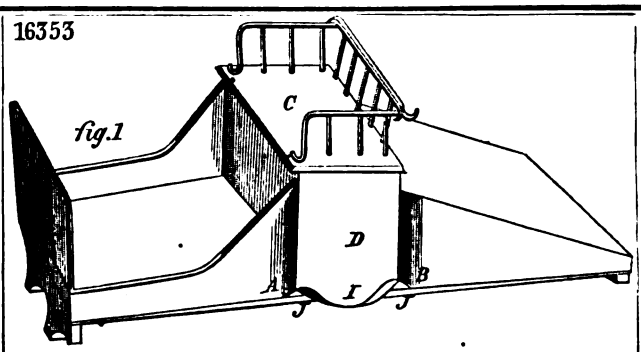

fig.2

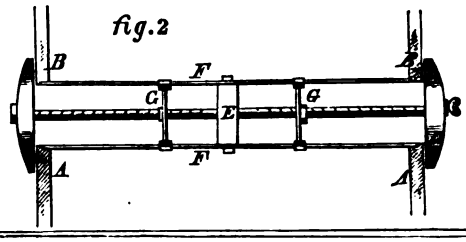

17337

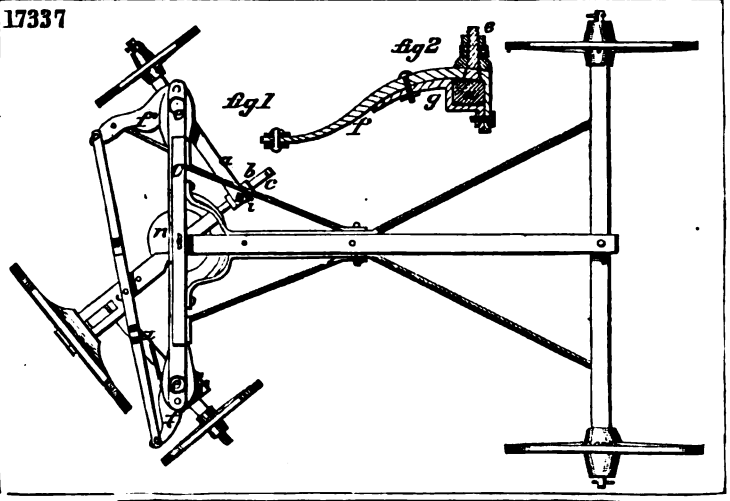

18403

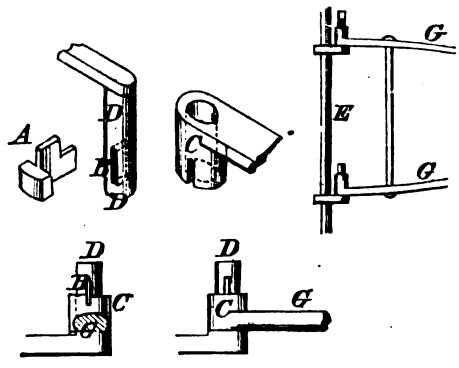

17805

fig.1

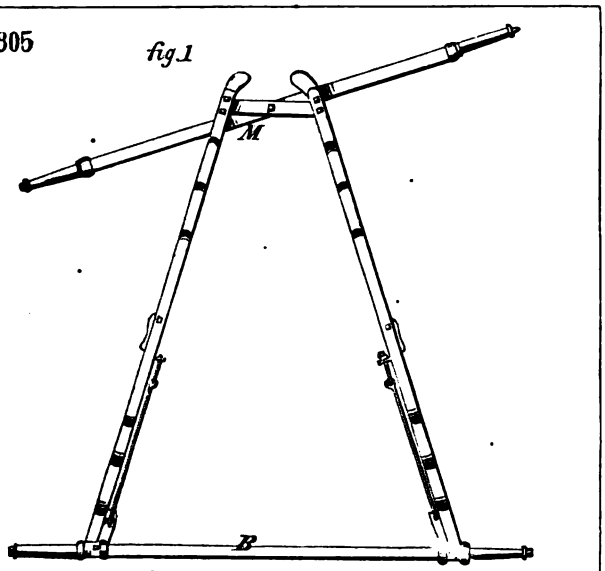

fig.2

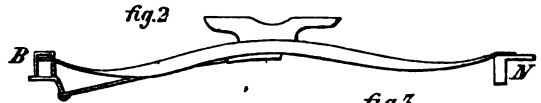

fig.3

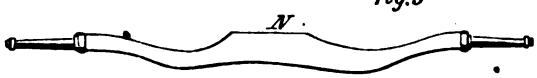

38

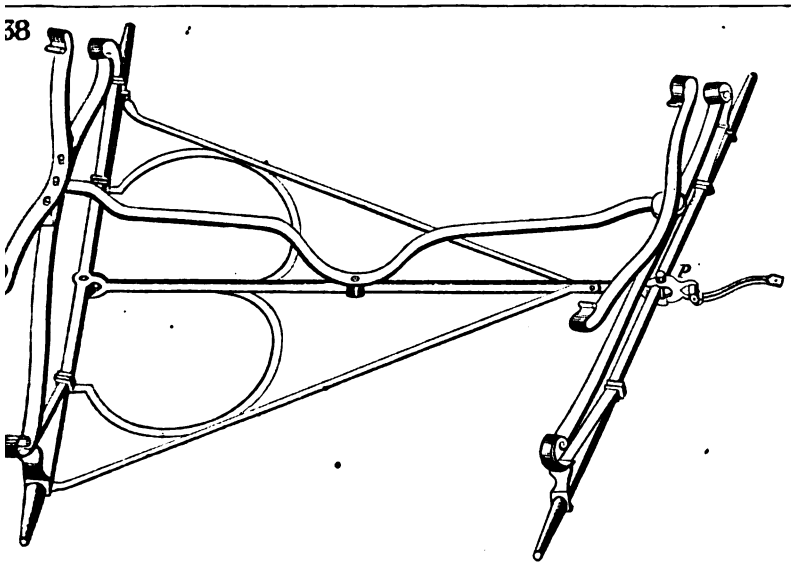

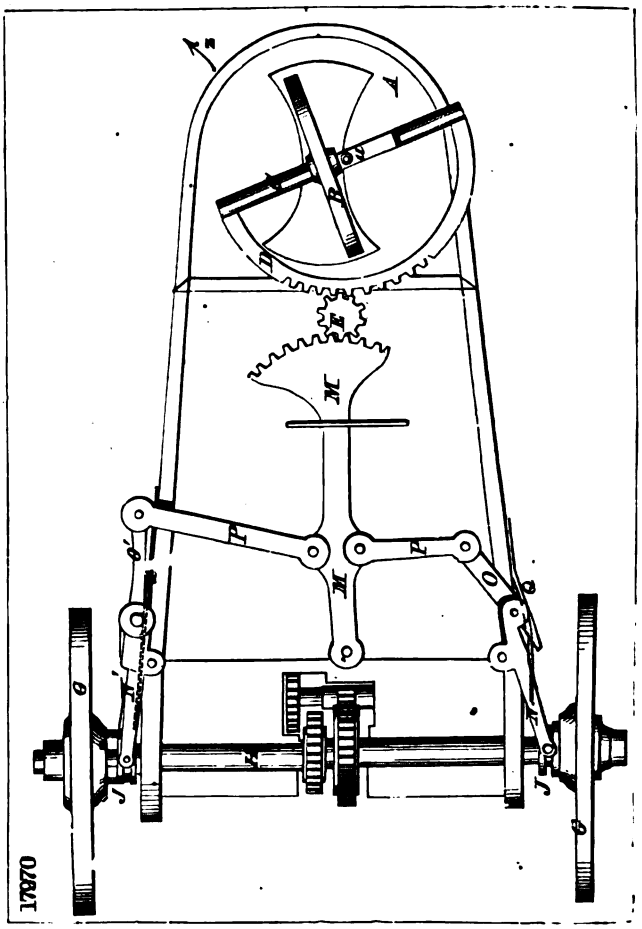
17070

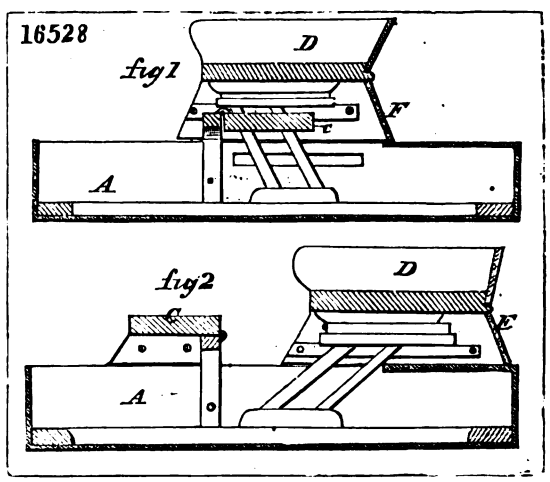
16528
fig1
D
F
A
fig2
D
F
A

3

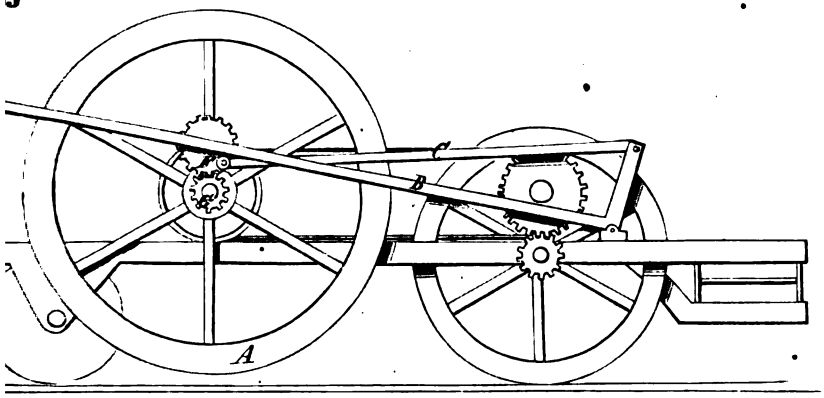

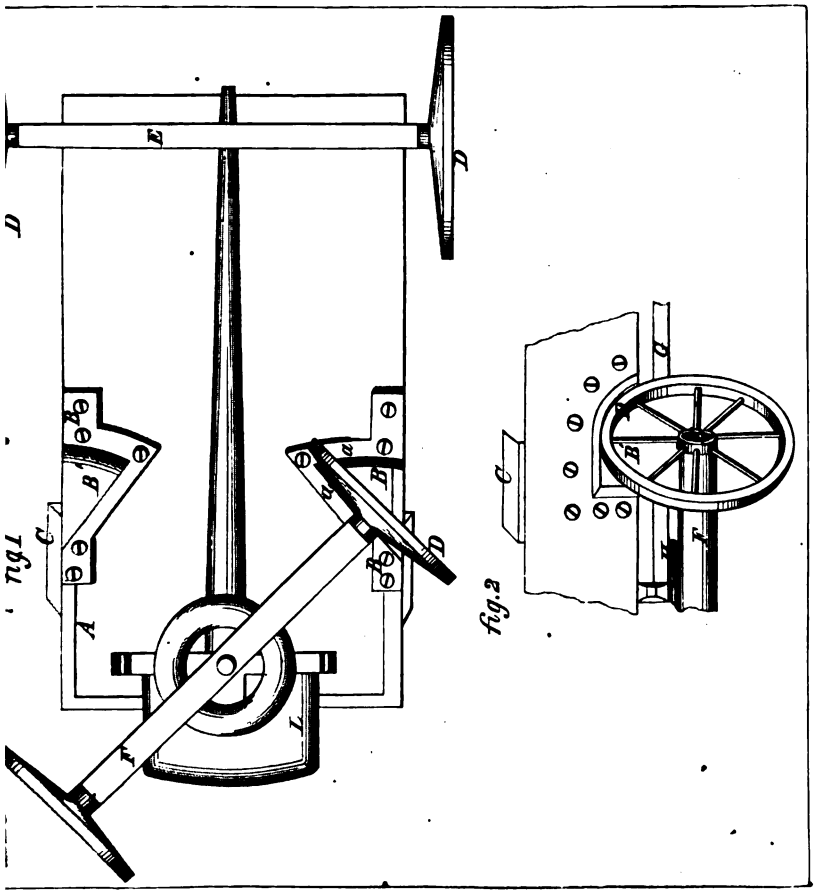

18781.

fig.1

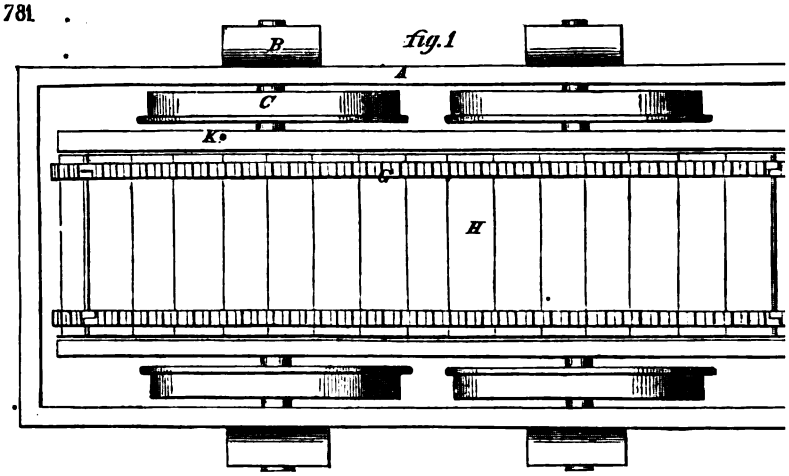

fig.2

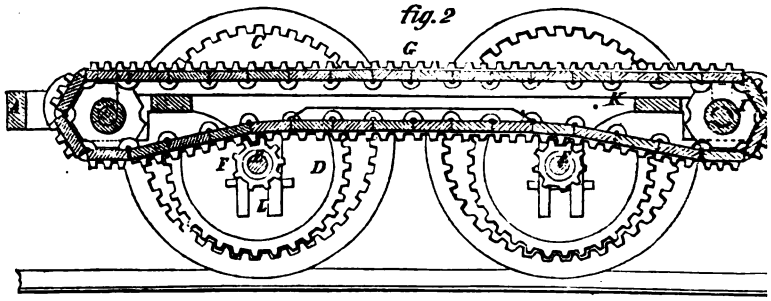

16762

fig.1

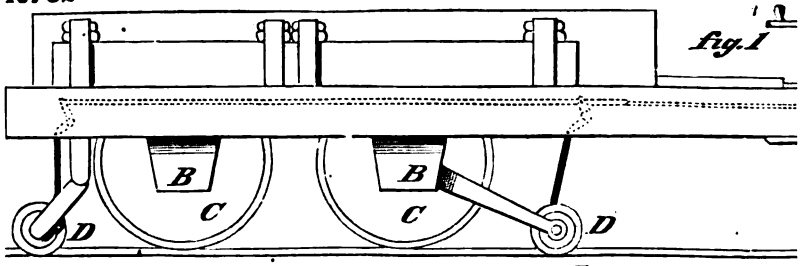

fig.2

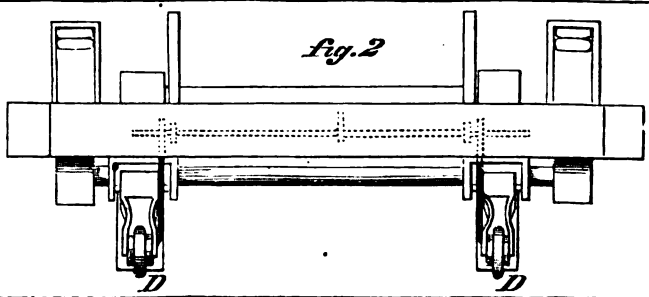

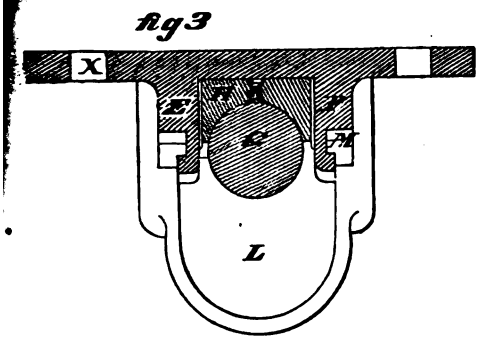
fig 3
X
L

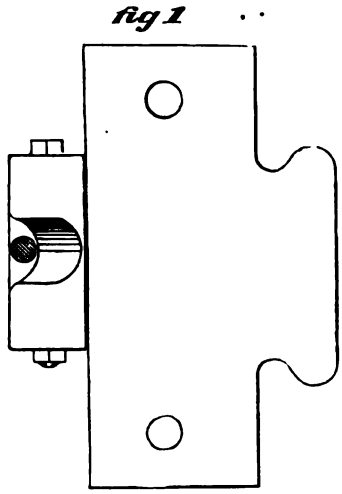
fig 1

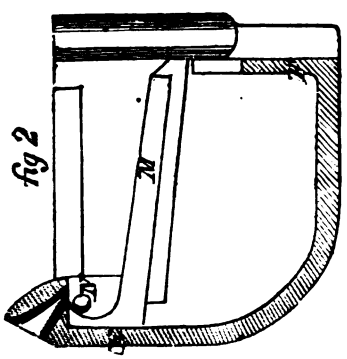
fig 2

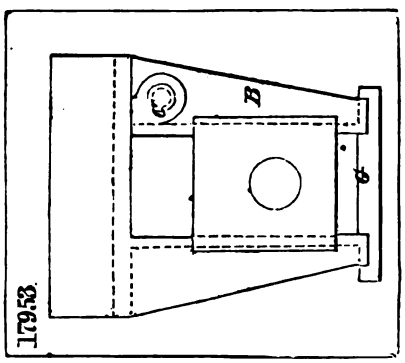
B
17953

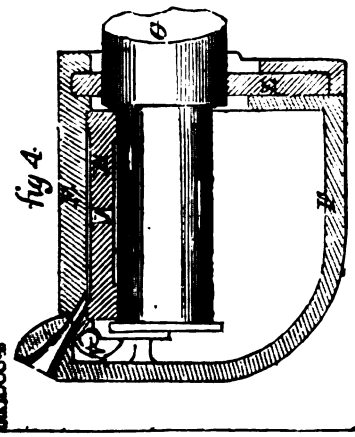
fig 4
16884

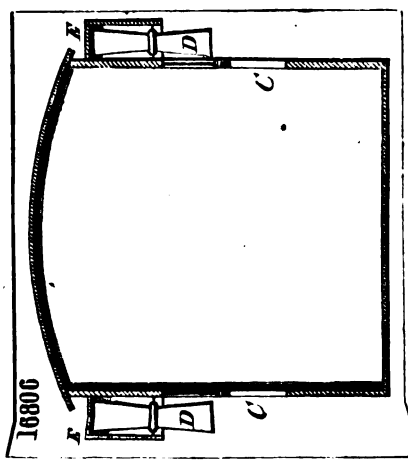
C
D
16806

17114

fig 1

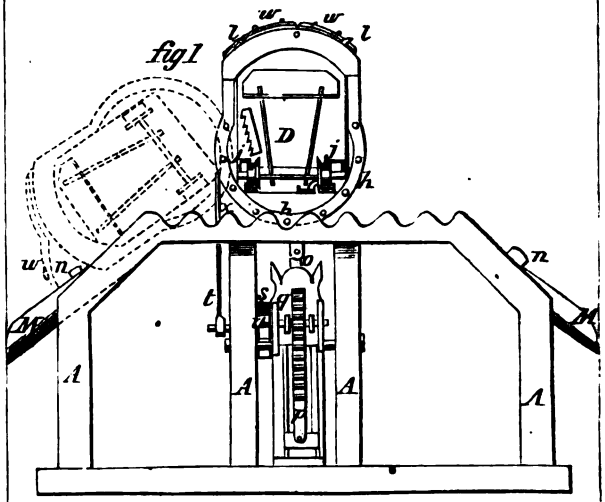

fig 2

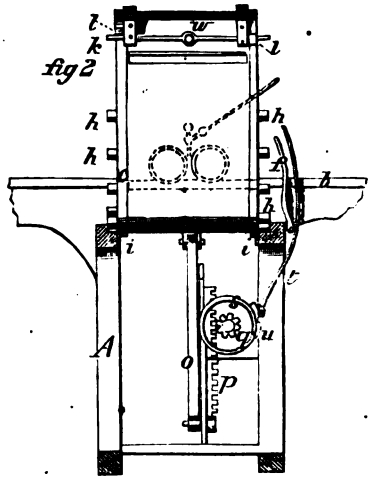

18950

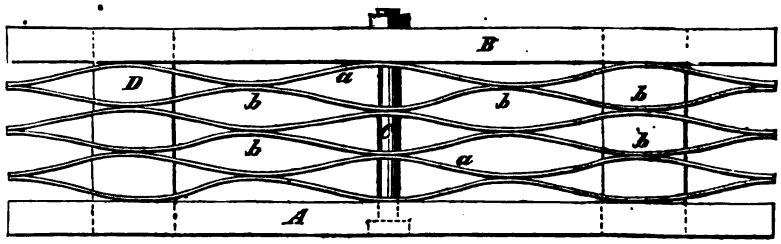

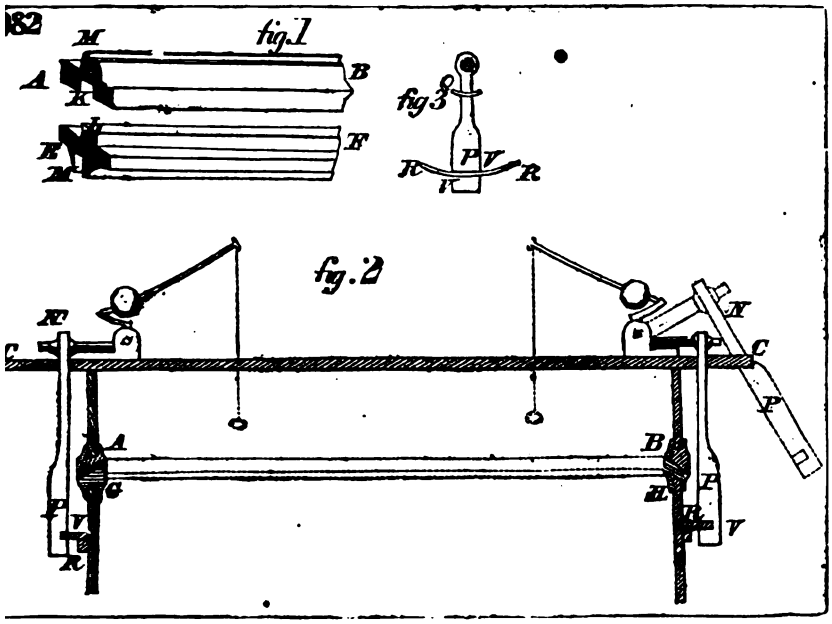
fig. 1
fig 3
fig. 2

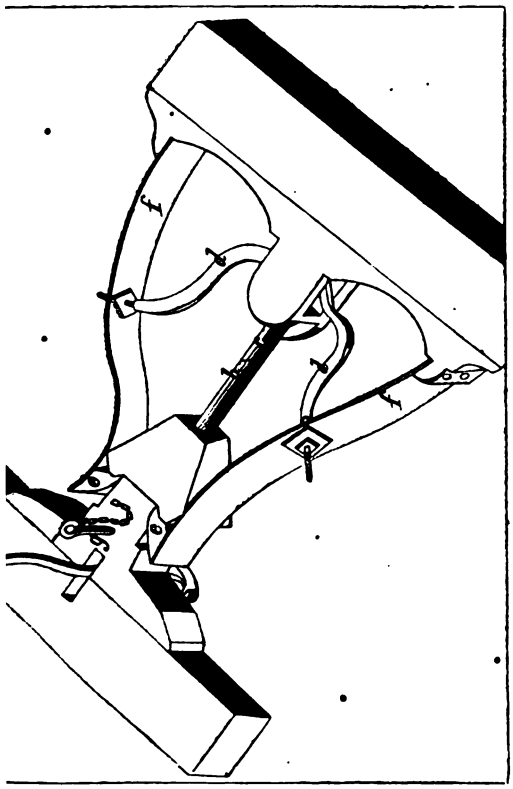

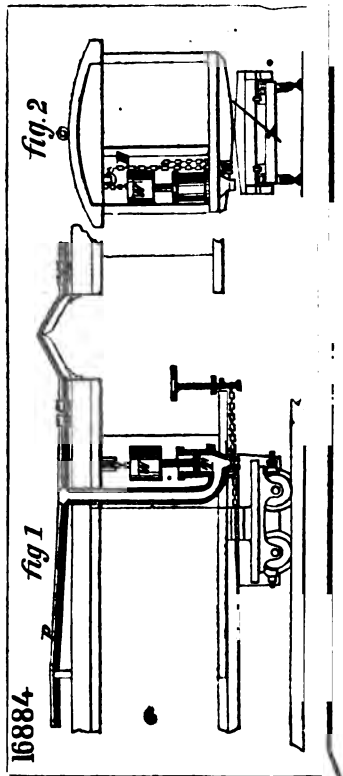
fig. 2
fig 1
16884

17801

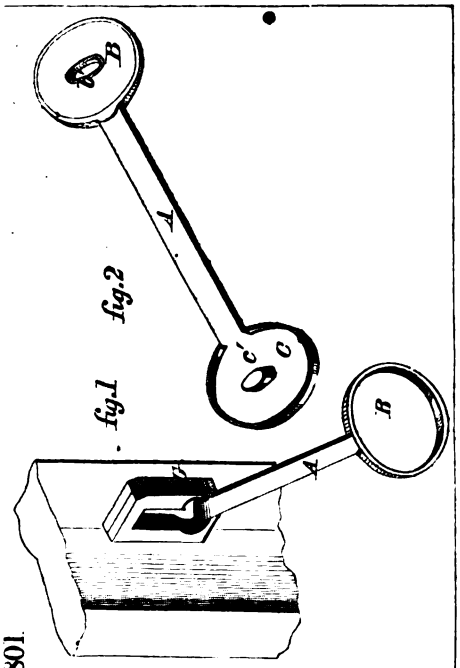

18984

fig 1

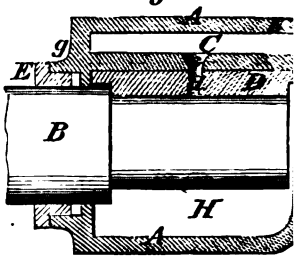

fig 2

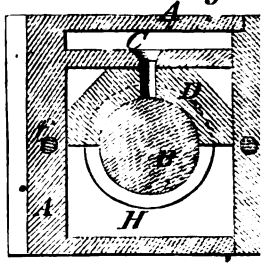

18400

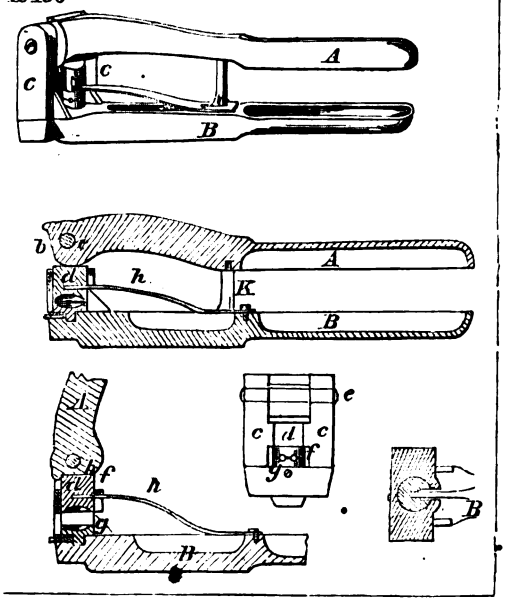

17802

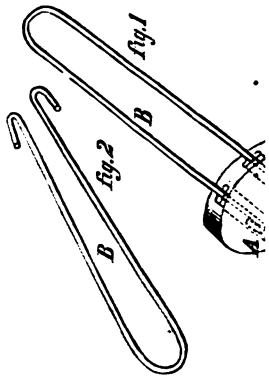

486

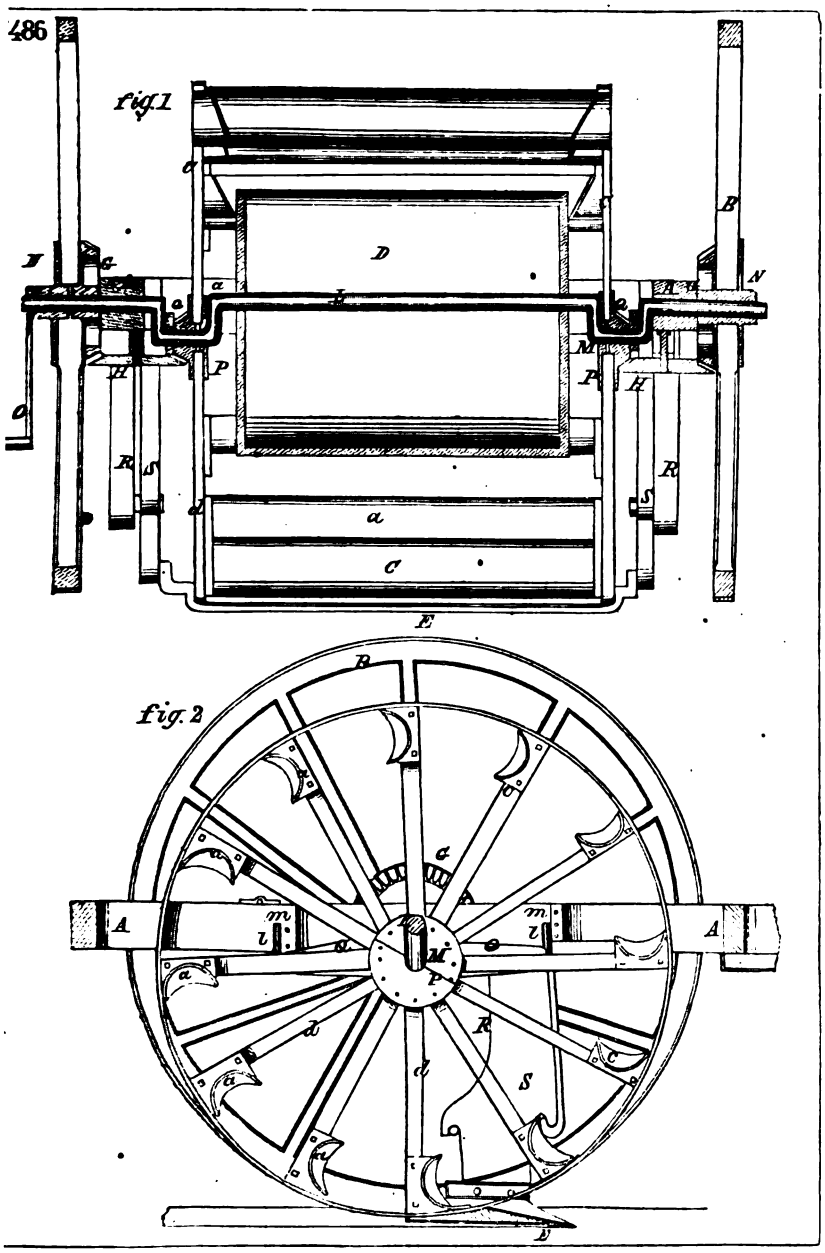

18519

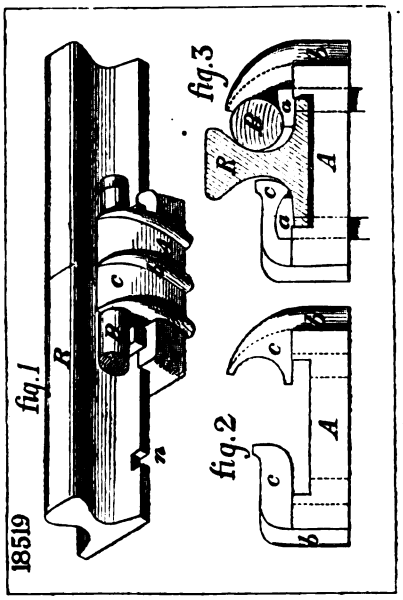

17773

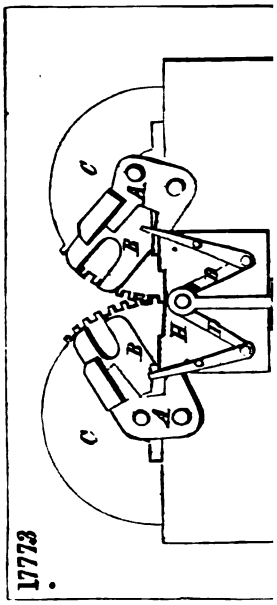

16813

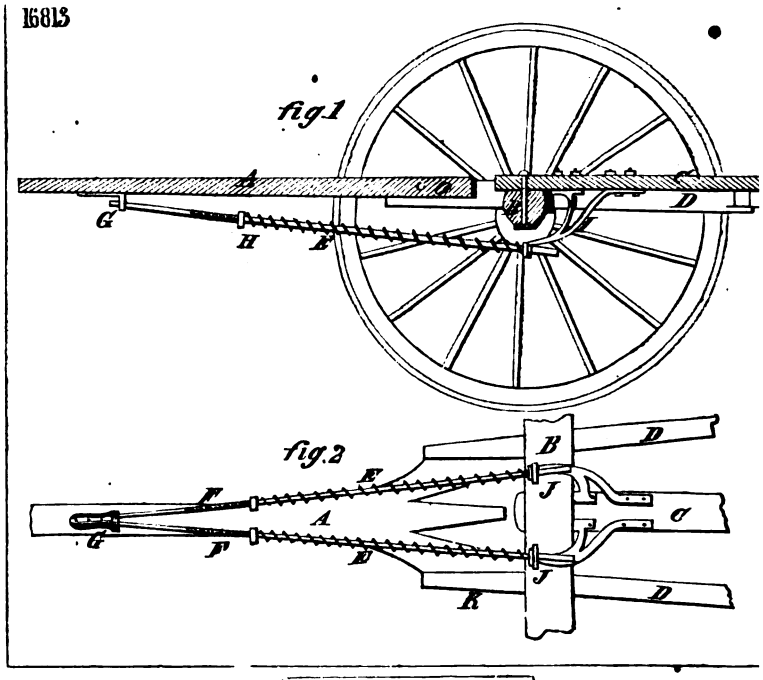

16408

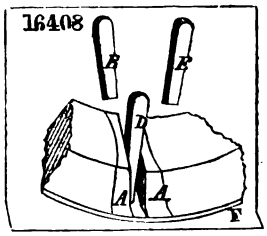

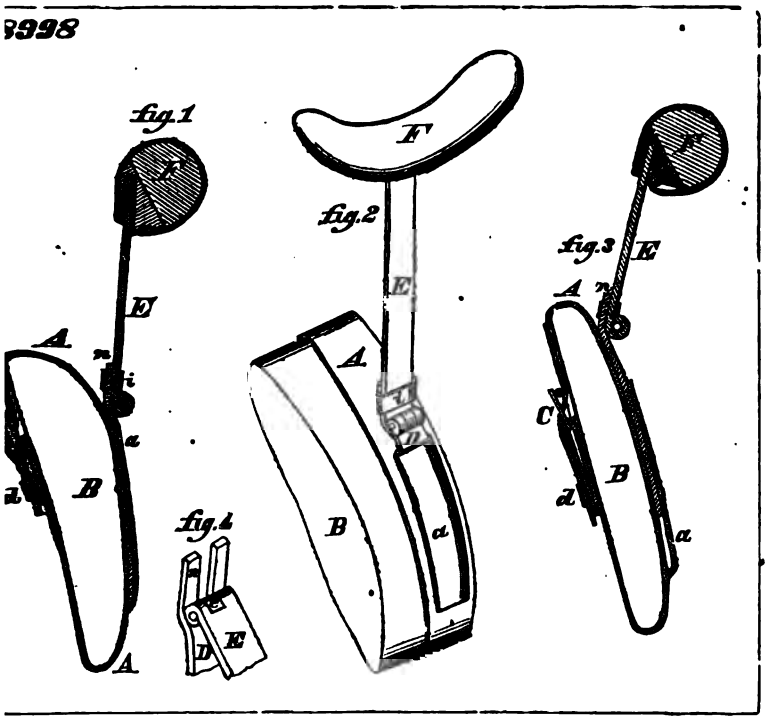
8998
fig.1
fig.2
fig.3
fig.4
A
B
E
F
C
D
a
d
n
i

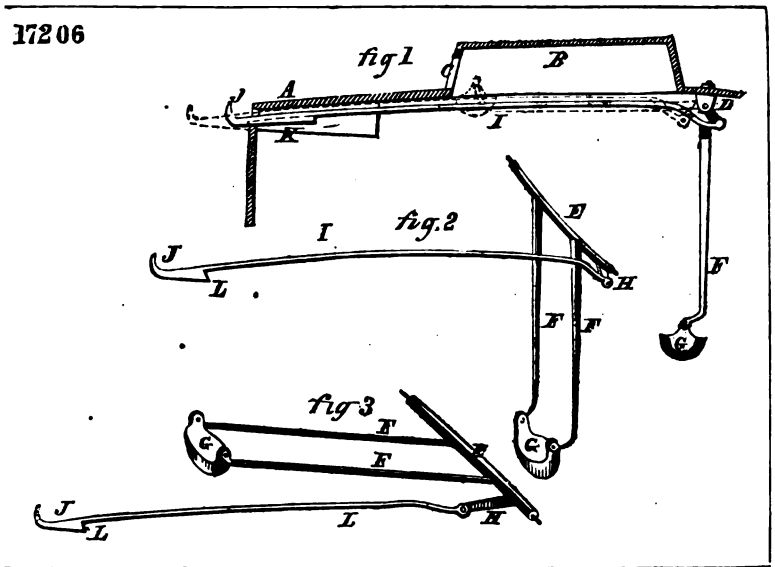
17206
fig 1
fig.2
fig 3
A
B
C
D
E
F
G
H
I
J
K
L

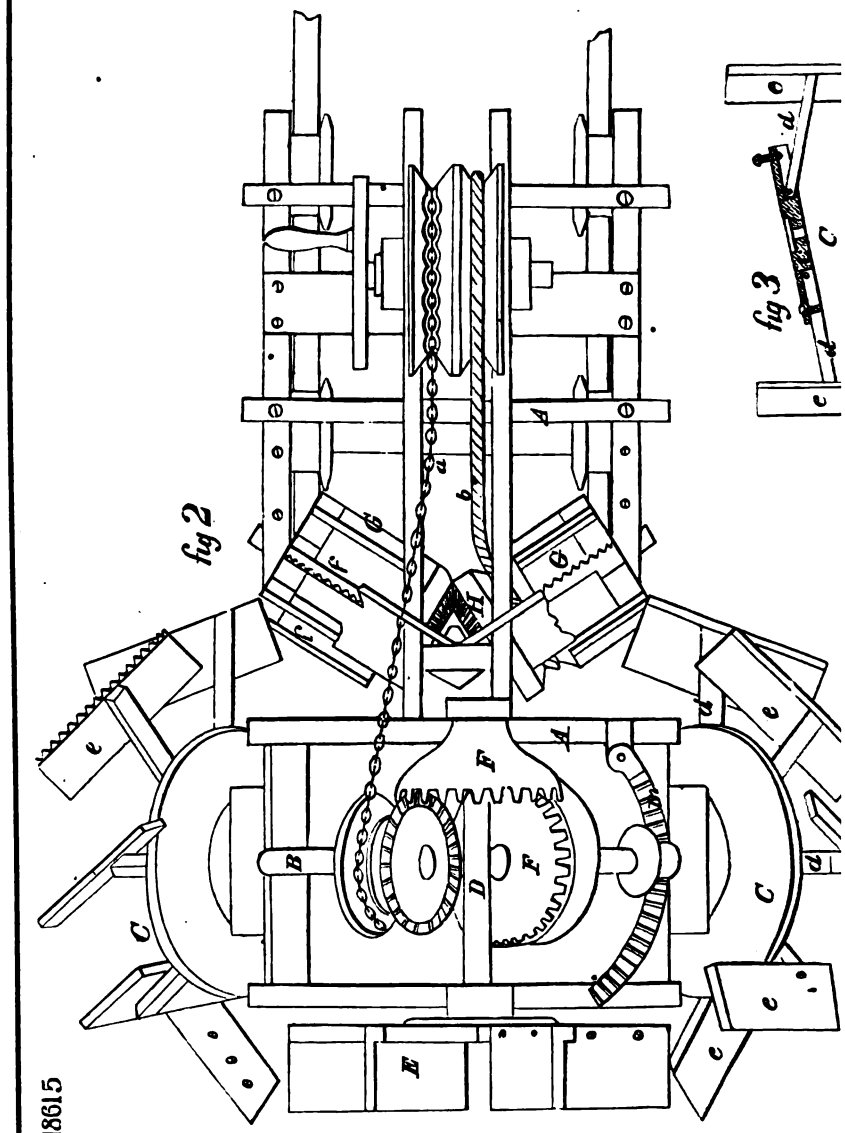

ud 18615

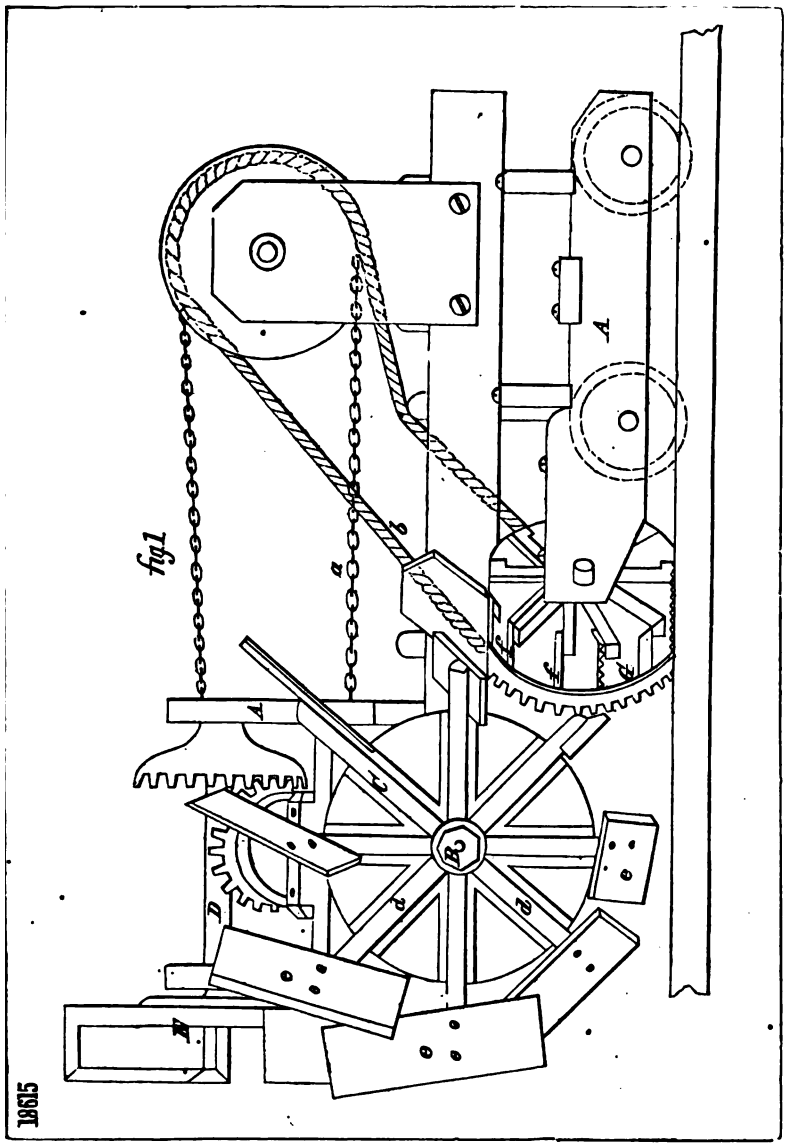
fig1
18615

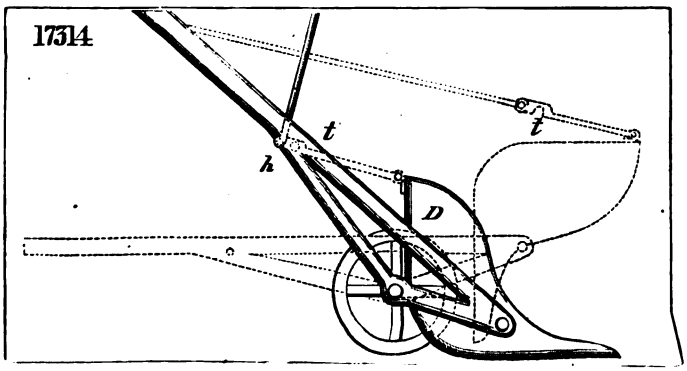
17314
t
h
D

[775]

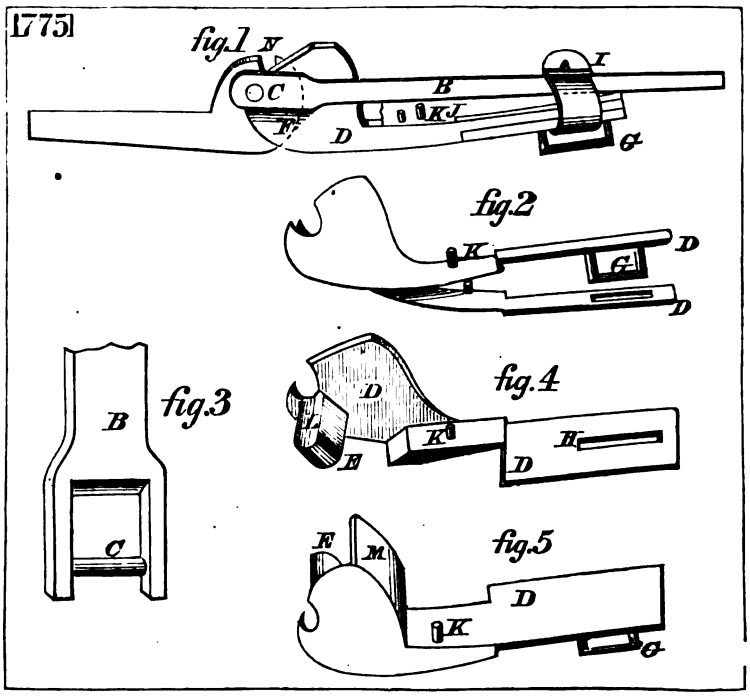
fig.1
N
C
B
I
K
J
F
D
G
fig.2
K
D
G
D
fig.3
B
C
fig.4
D
K
E
D
E
fig.5
E
M
D
K
G

18882

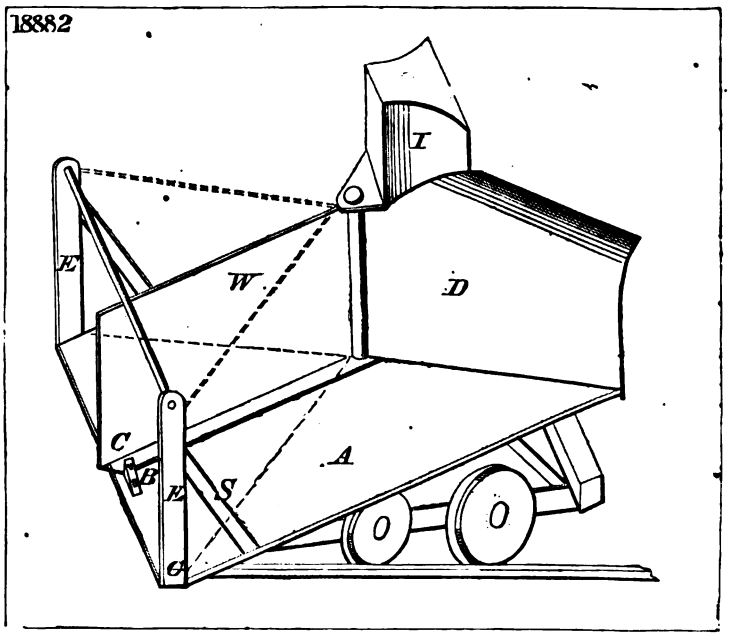
I
E
W
D
C
B
E
S
A
G

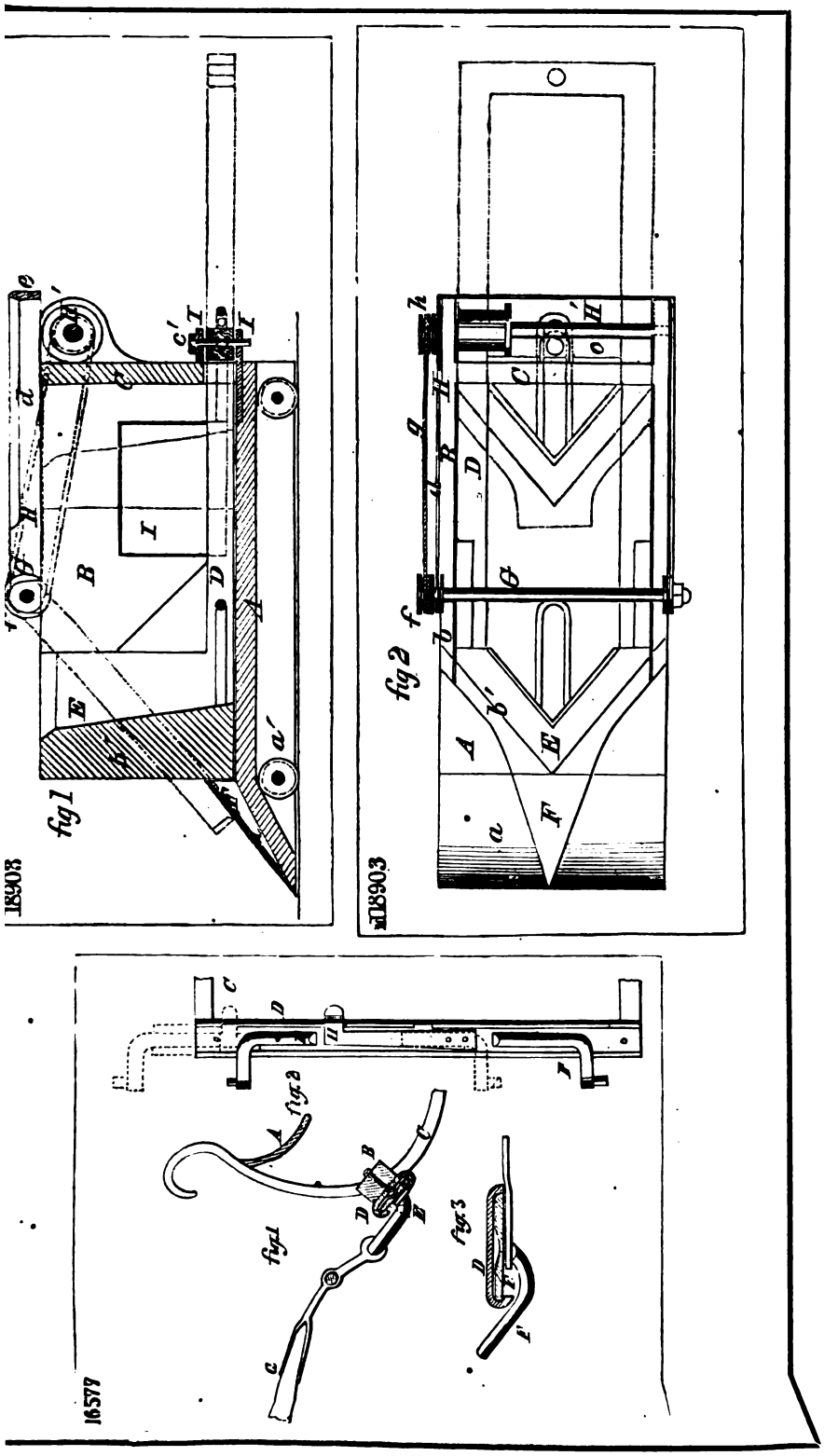
18903
fig 1
fig 2
18903
16577
fig 2
fig 1
fig 3

od 18865

fig 2

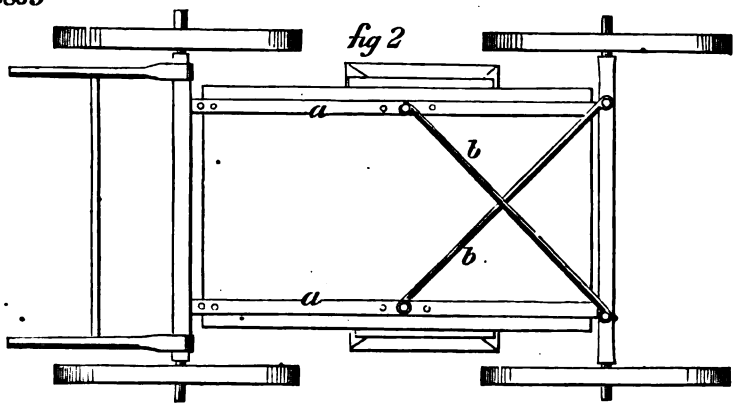

17232

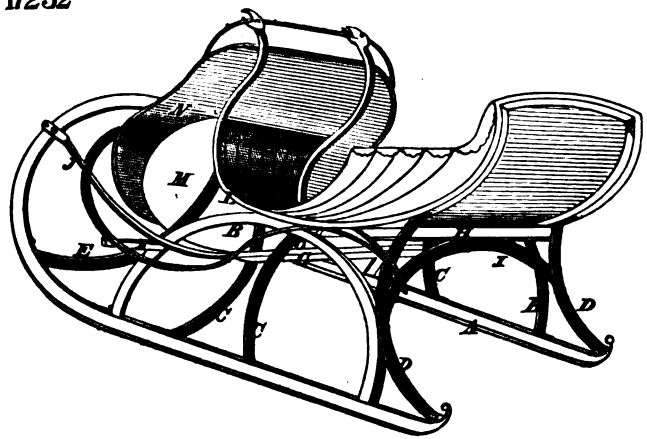

18426

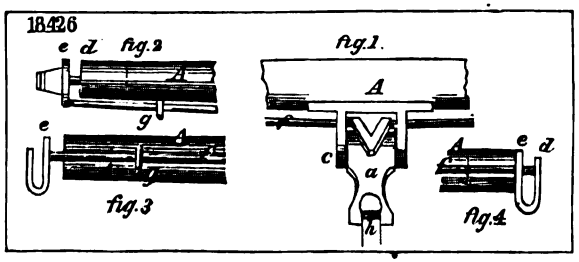

18865

fig 1

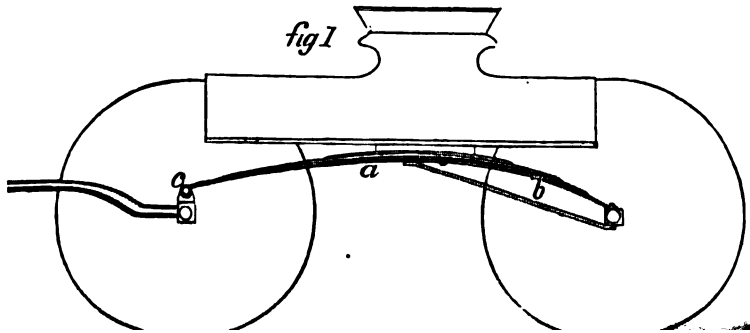

17358

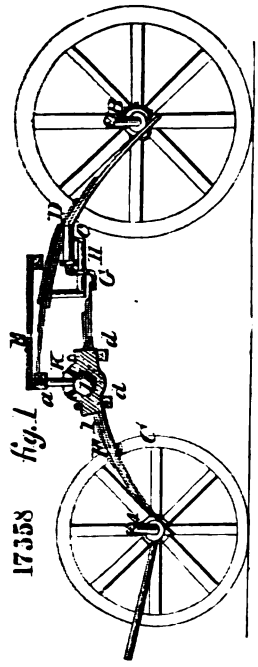

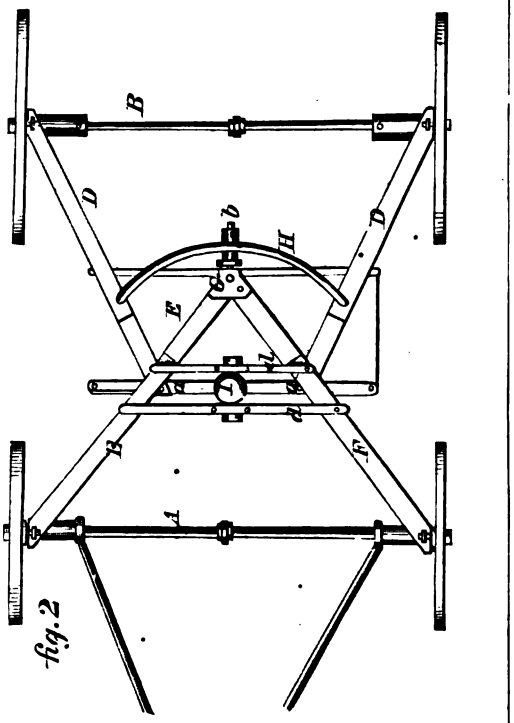

6625

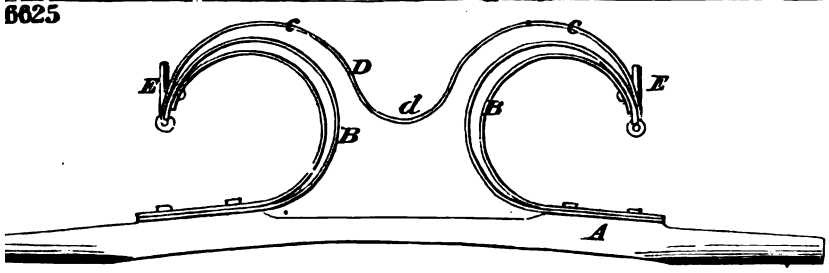

17918

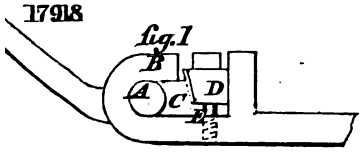

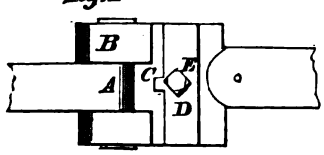

18077

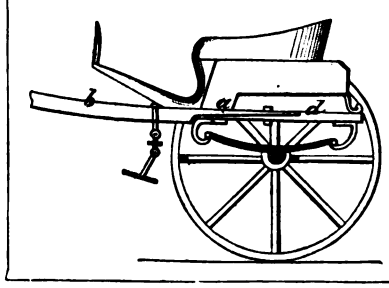

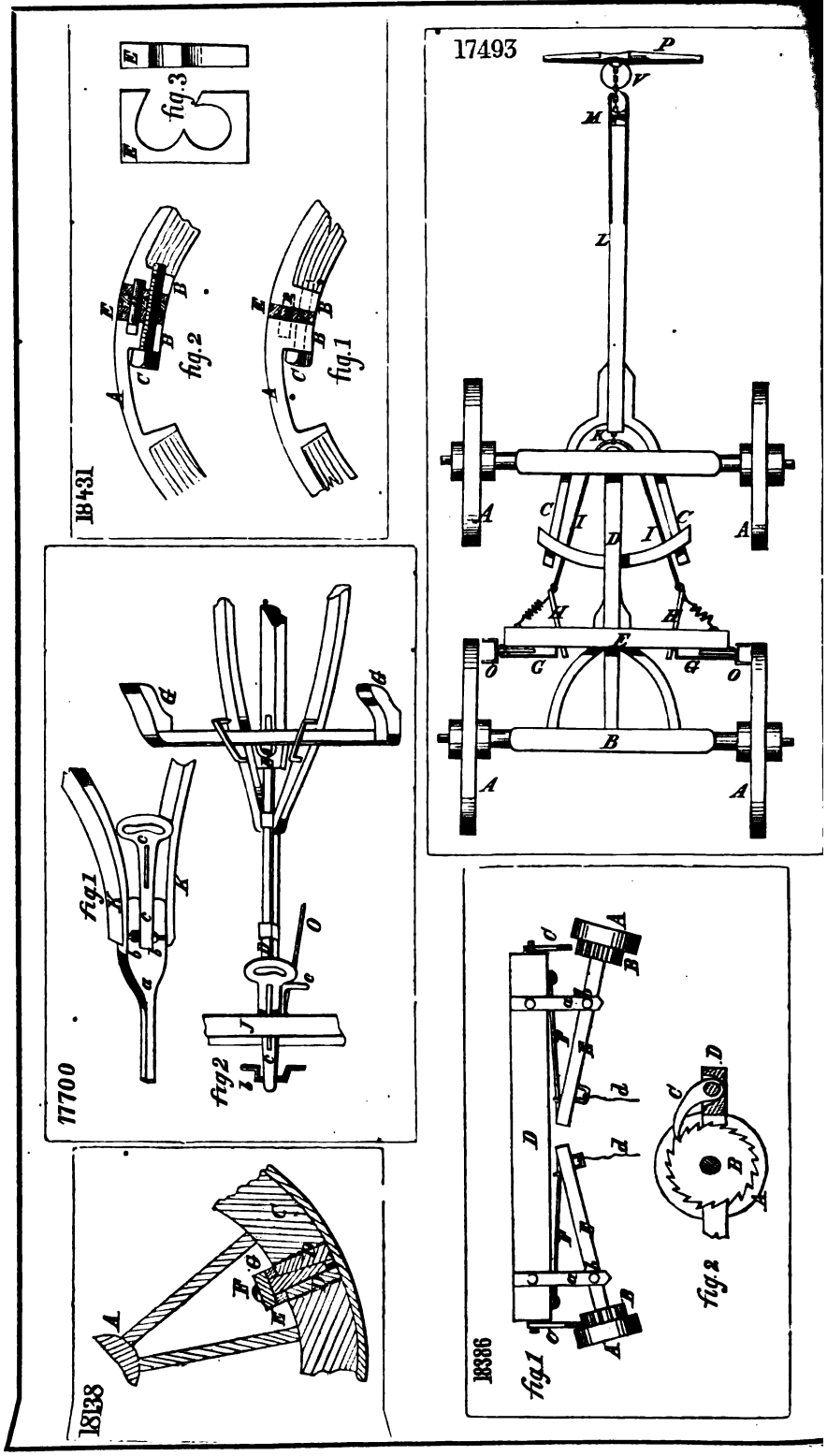
18431
fig.3
fig.2
fig.1
17493
17700
fig1
fig2
18386
fig1
fig2
18138

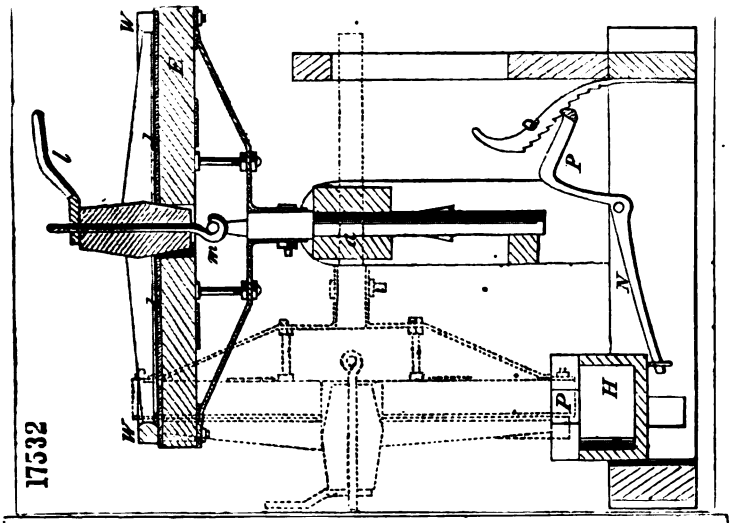

17532

16523.

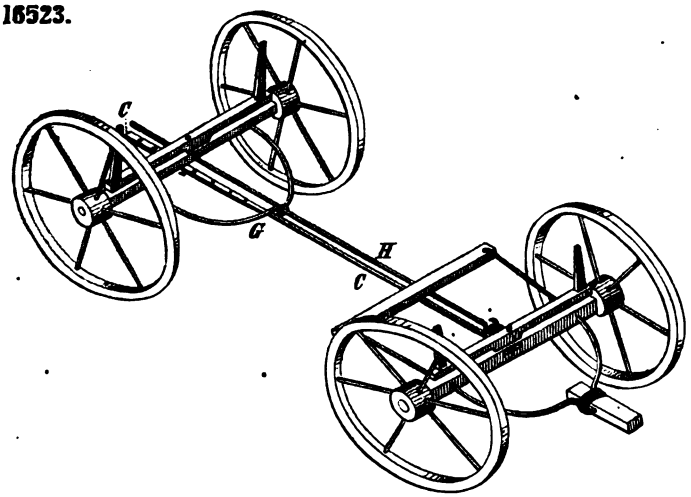

17369

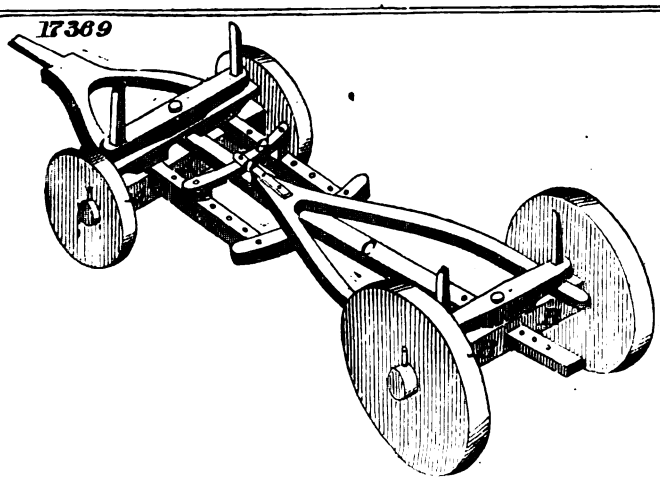

18438

fig.1

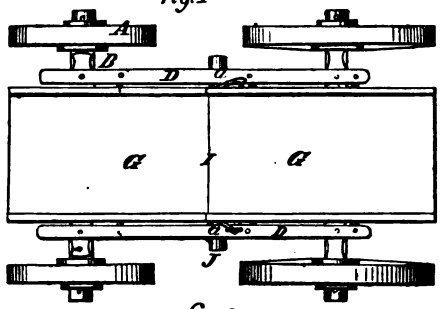

fig.2

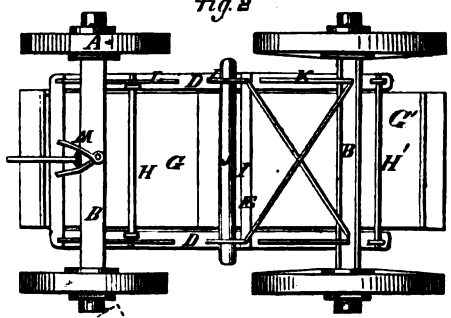

fig.3

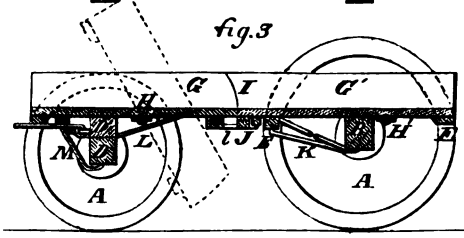

Fig.2

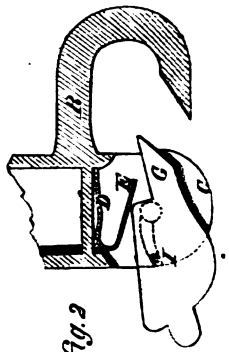

Fig.1

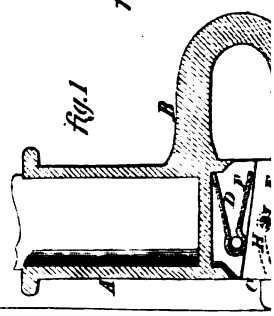

17668

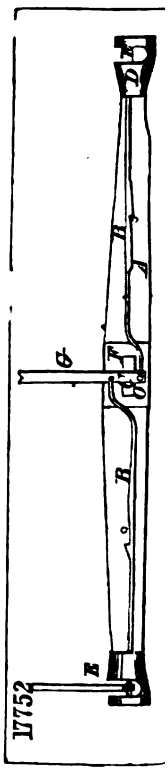

17752

6648

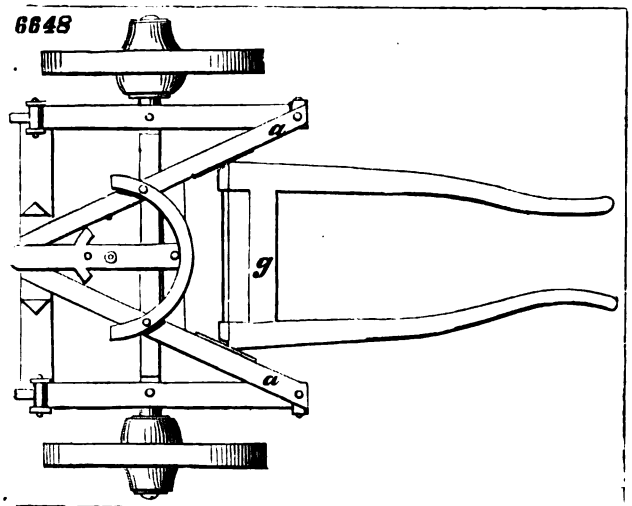

7509

fig.1

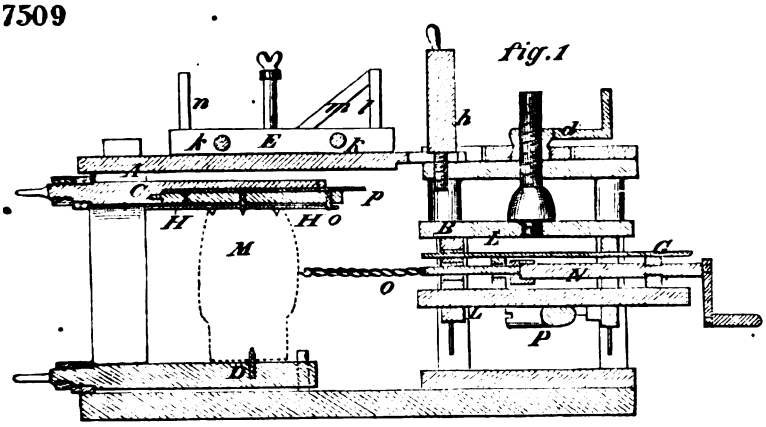

fig.2

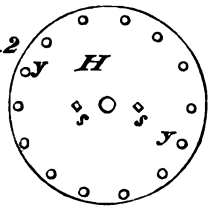

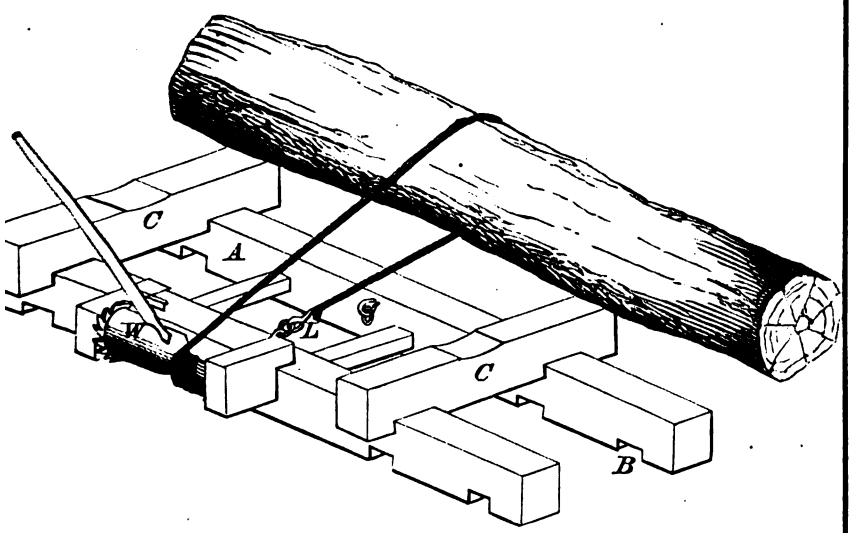

18448

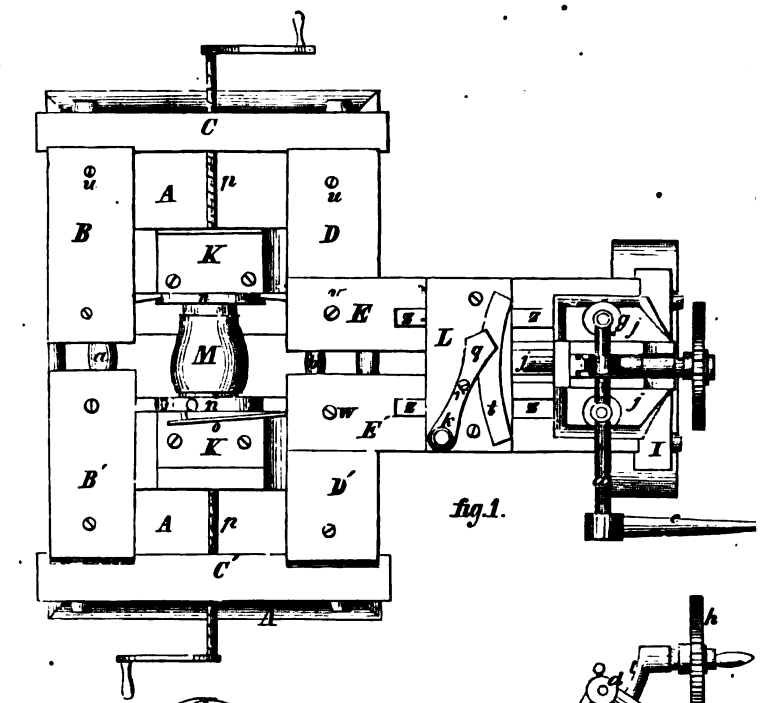

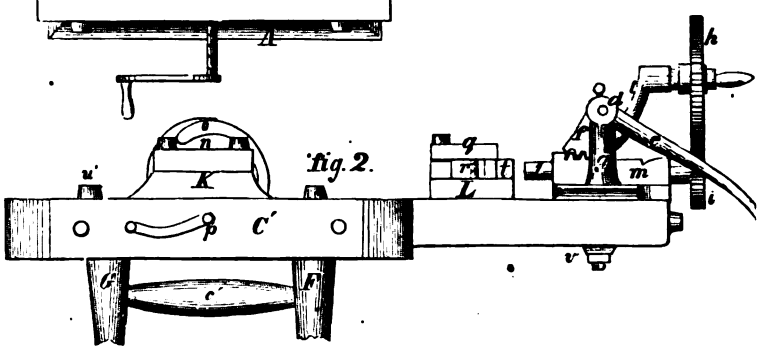

fig.3.

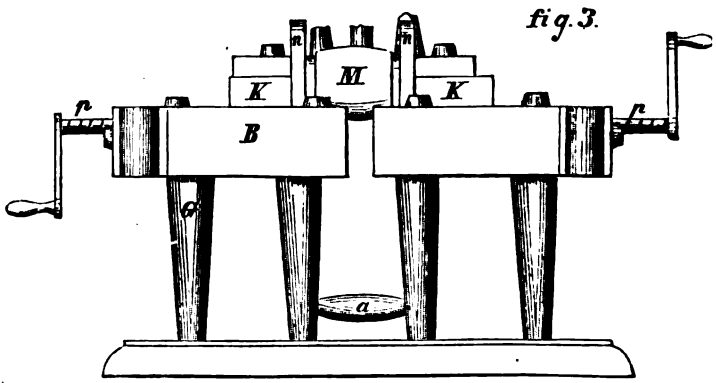

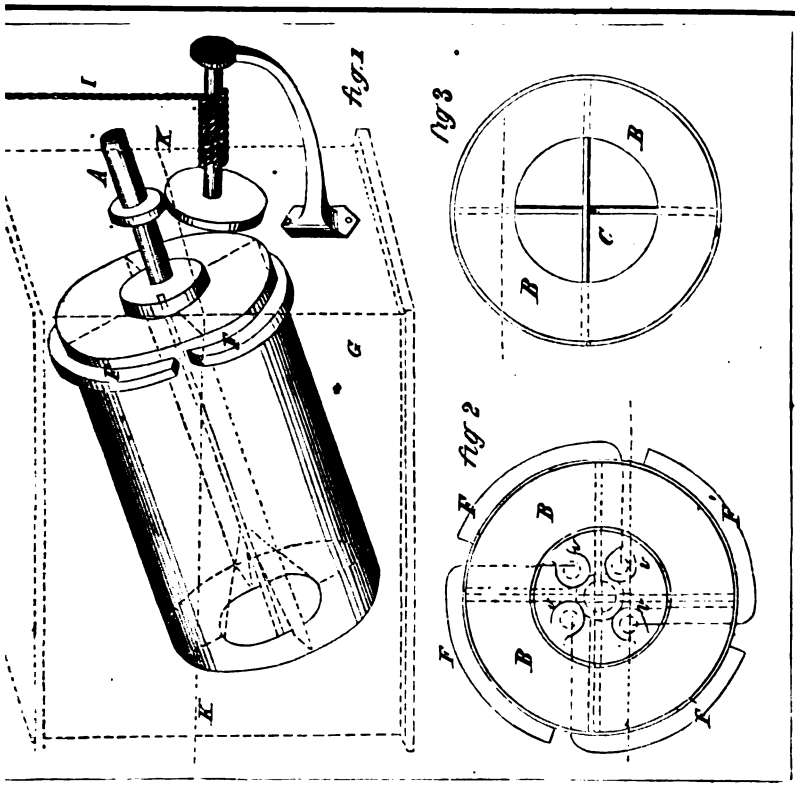

17664

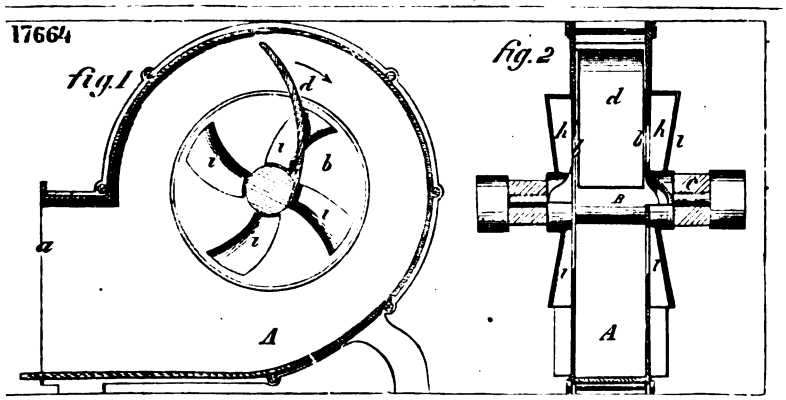

17530

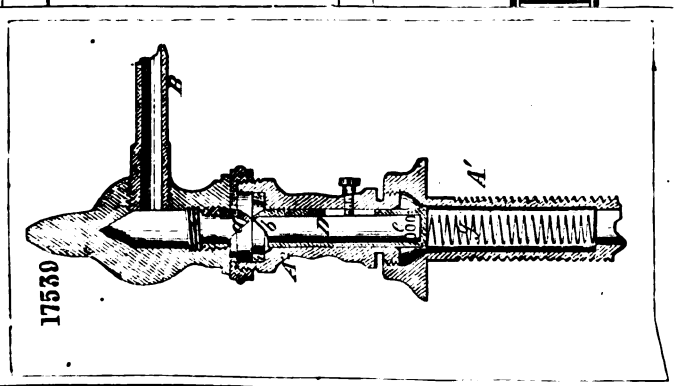

17604

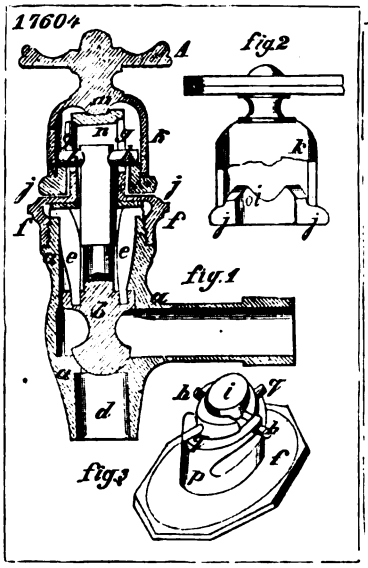

17433

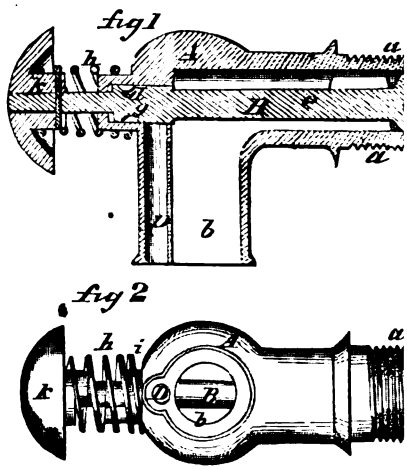

17511

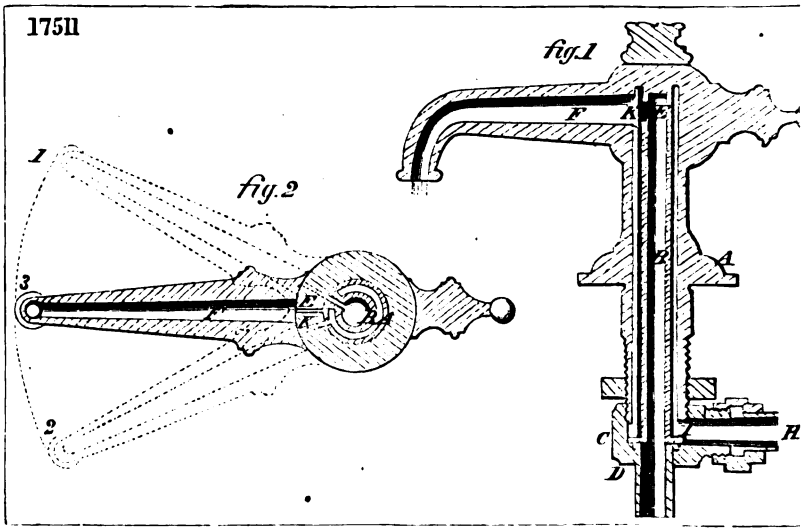

16736

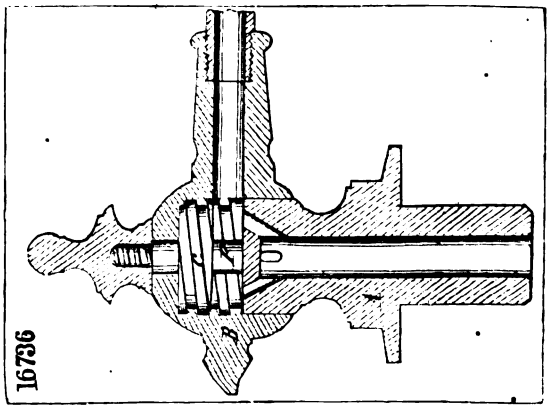

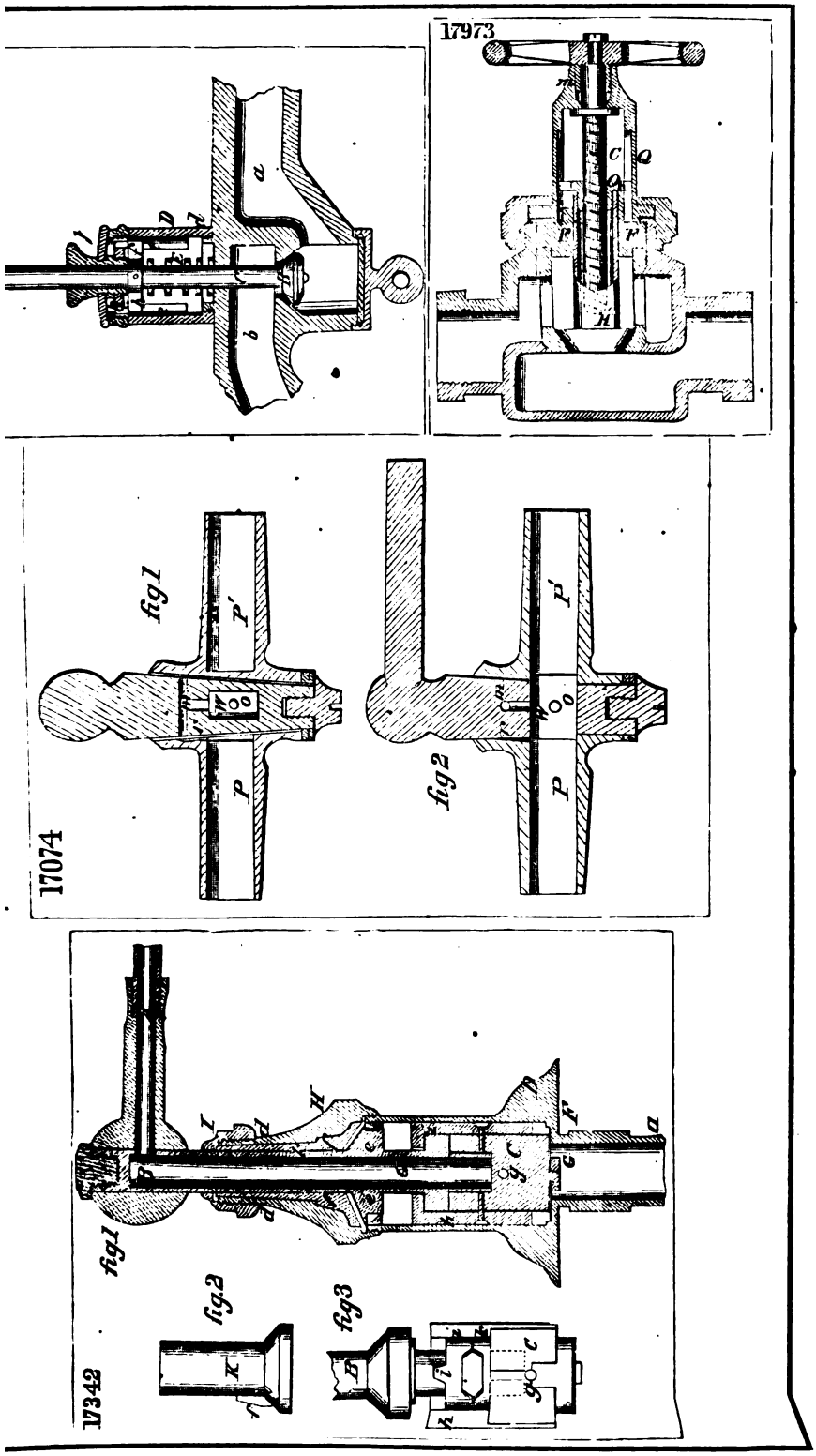
17973
17074
fig1
fig2
17342
fig1
fig2
fig3

16330

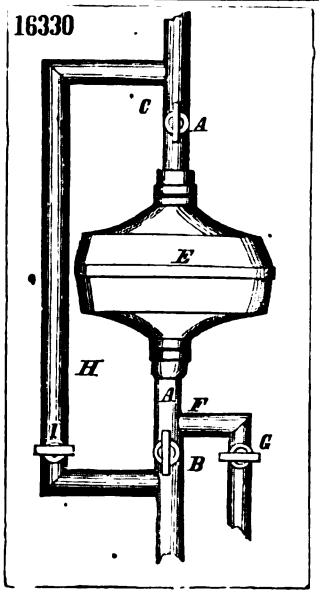

17028

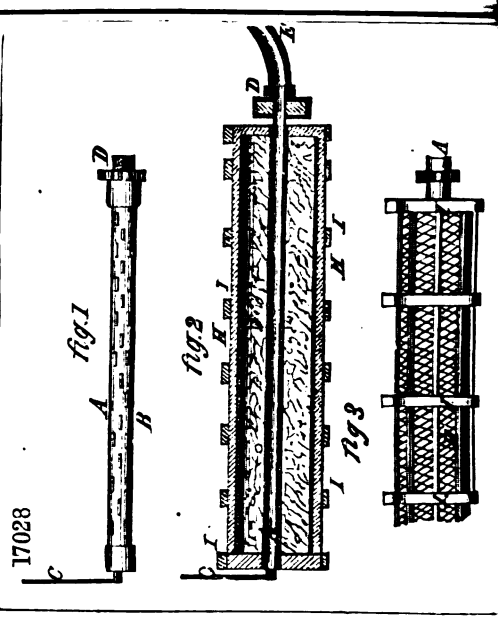

18031

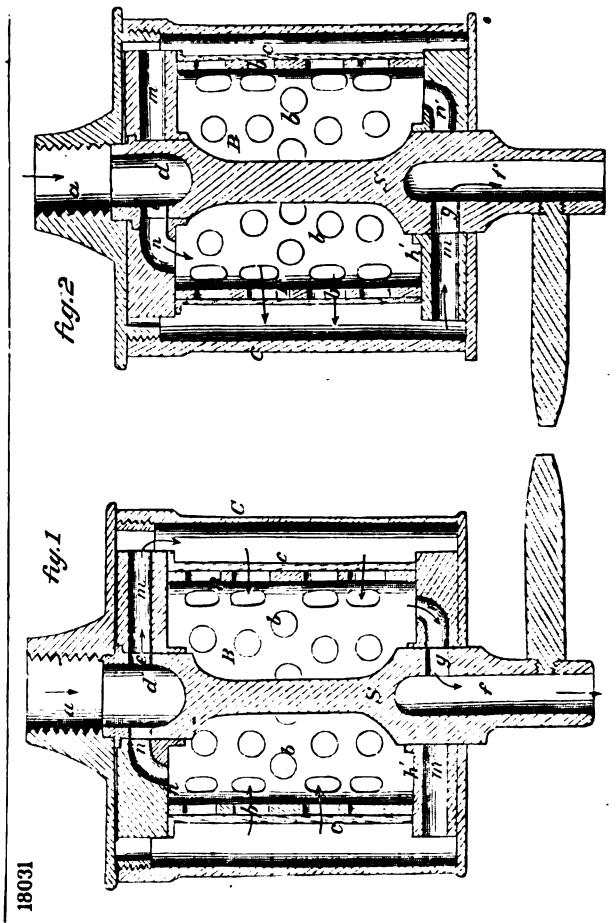

17987

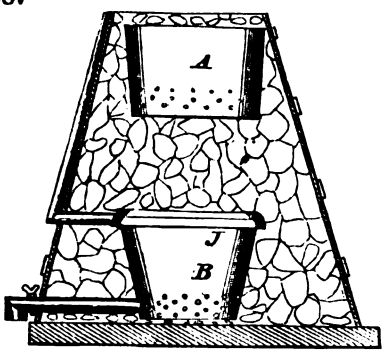

16810

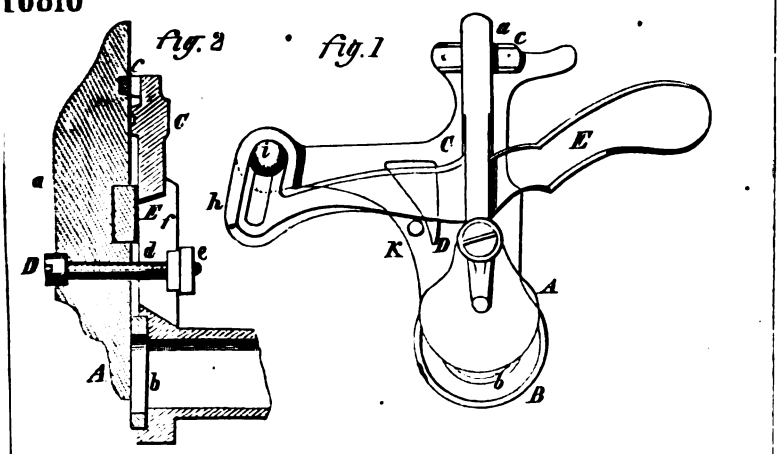

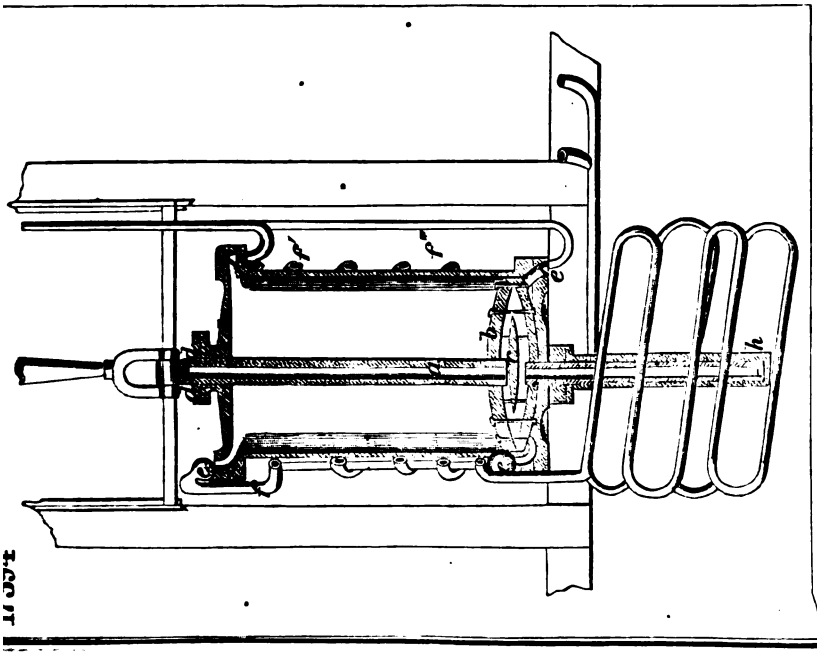

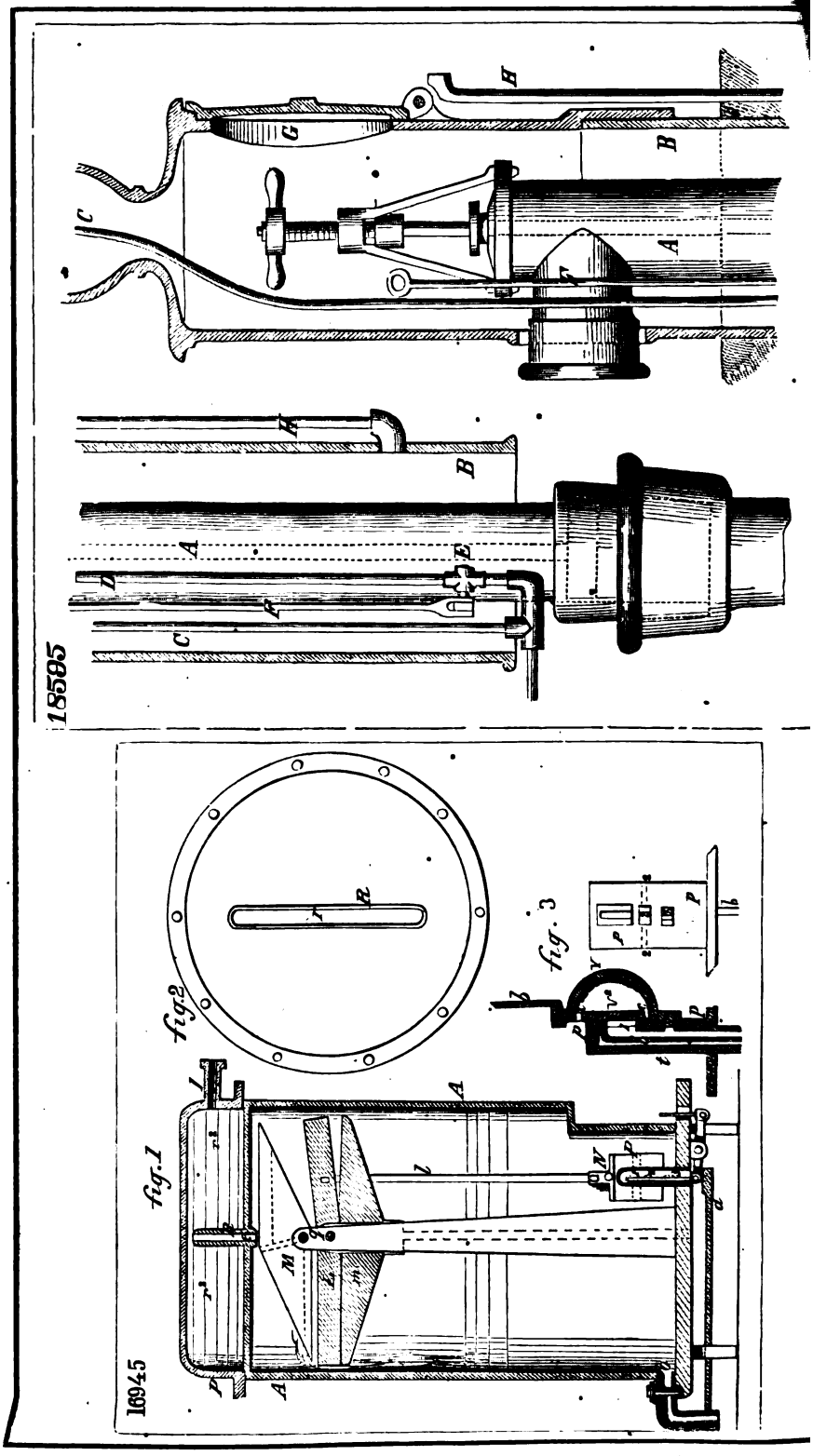
18585
16945
fig.1
fig.2
fig.3

17127

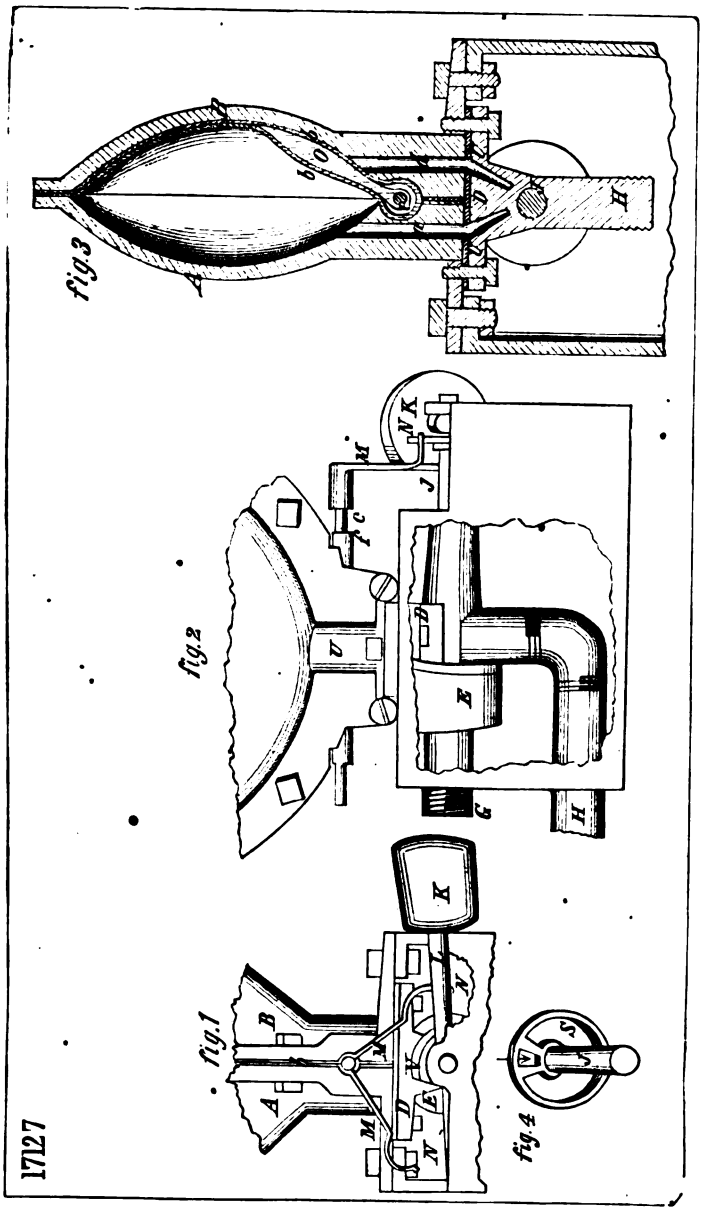

16450

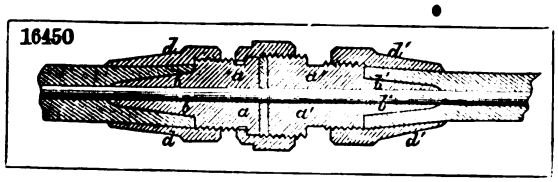

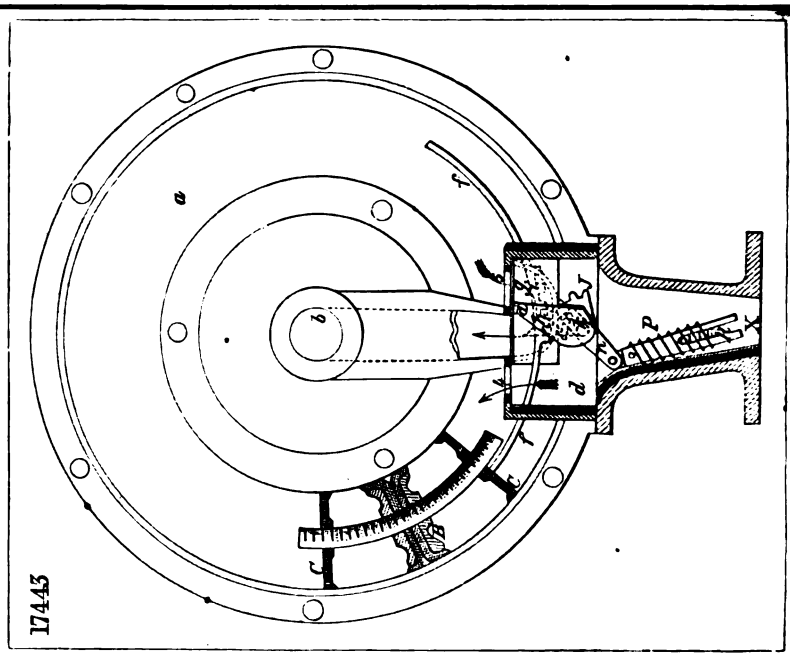
17445

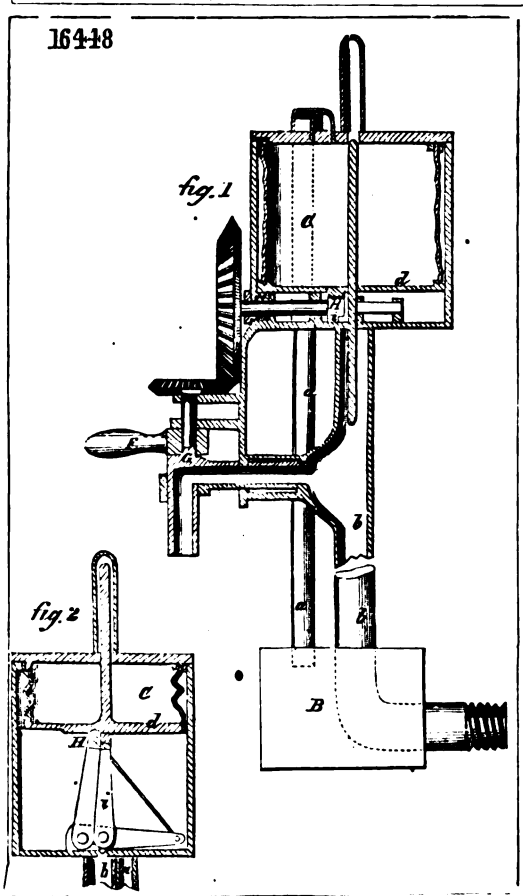
16418
fig. 1
fig. 2

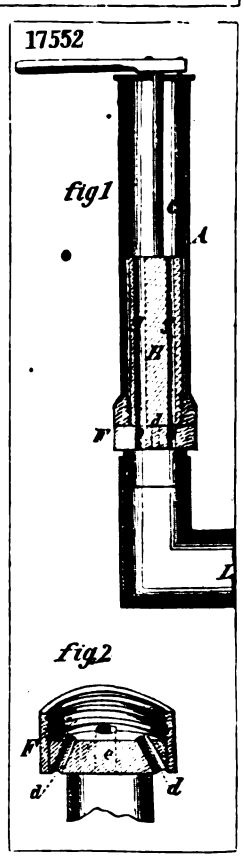
17552
fig 1
fig 2

17093

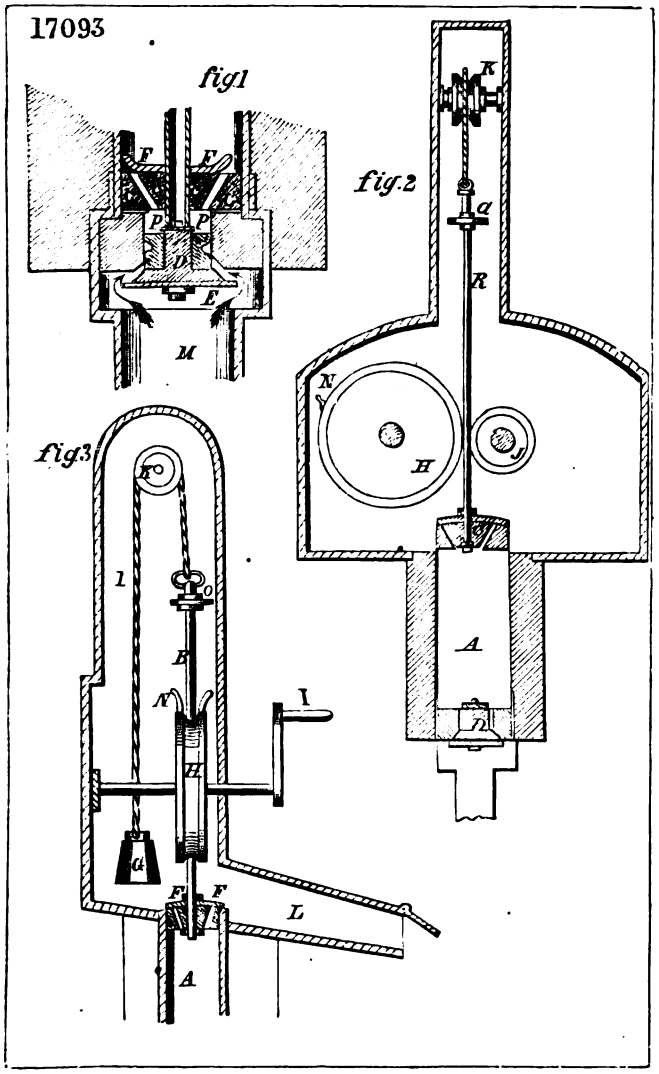

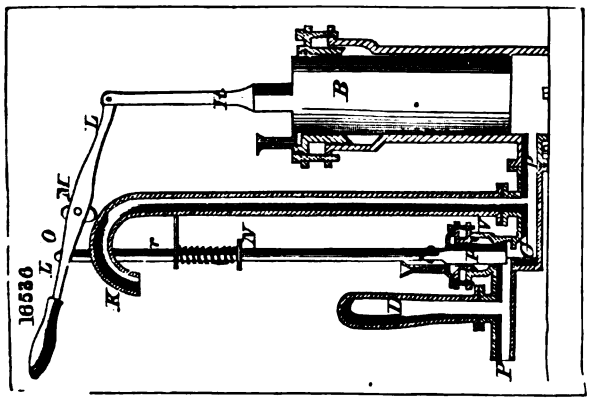

16756

fig. 1

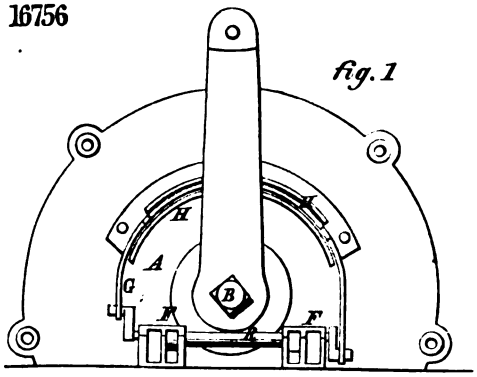

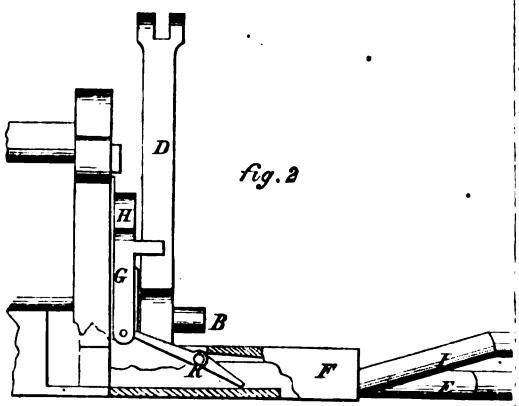

fig. 2

fig. 3

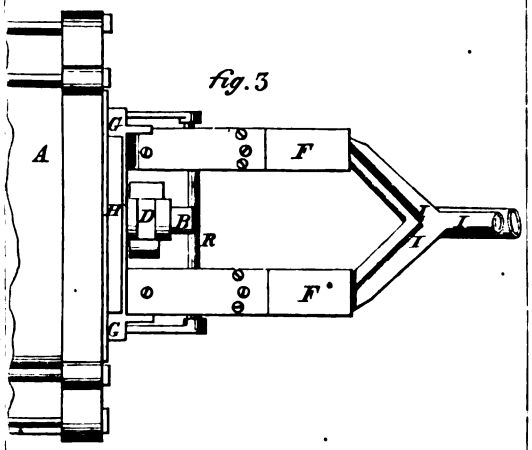

17538

fig. 1

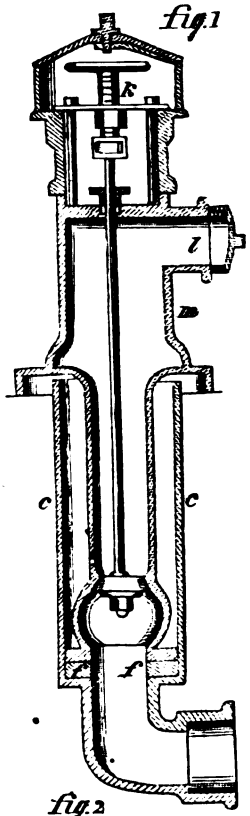

fig. 2

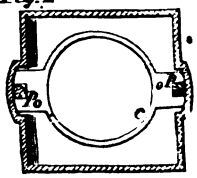

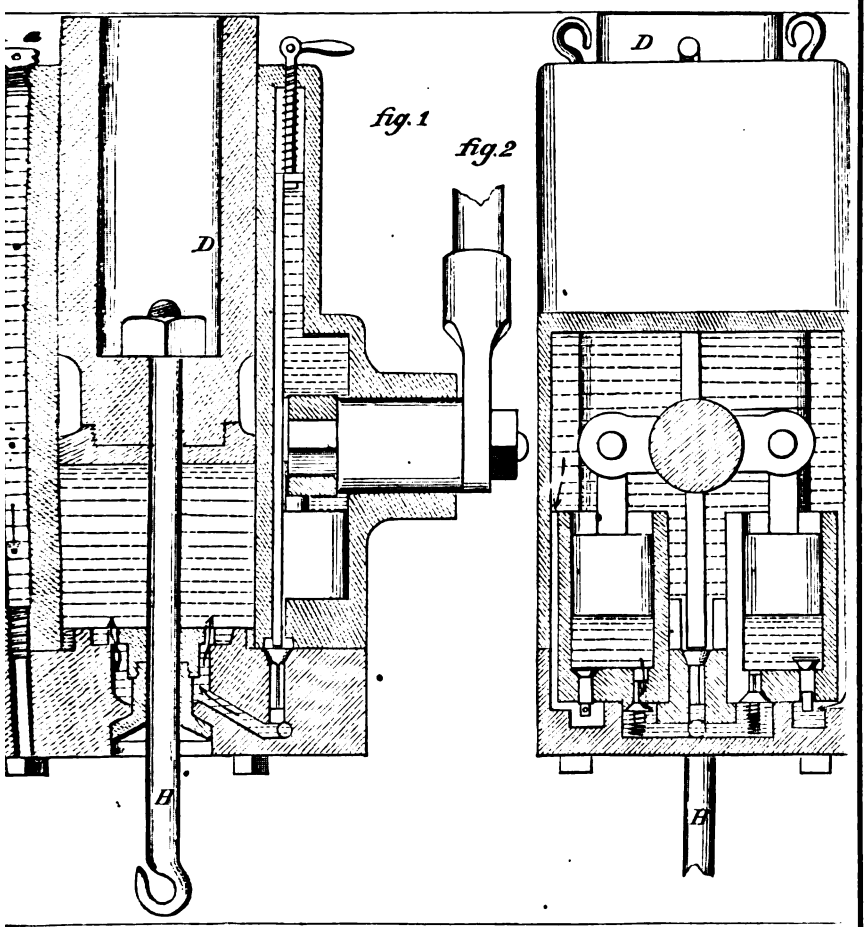

18912

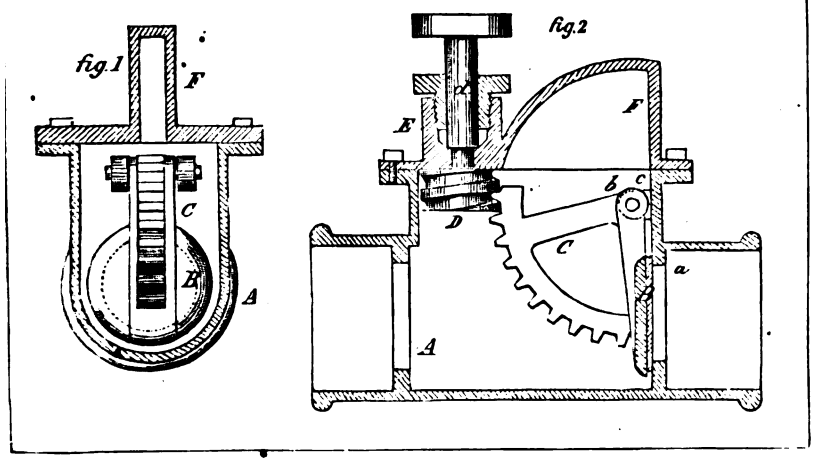

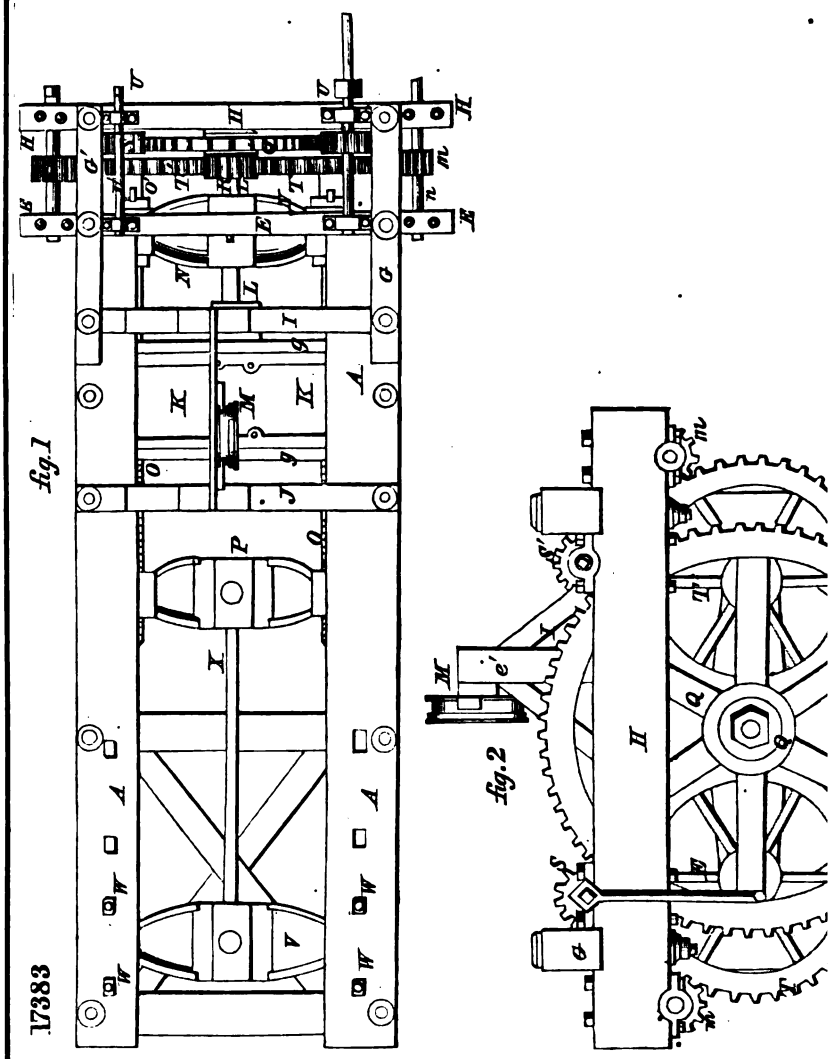
fig.1
fig.2
17383

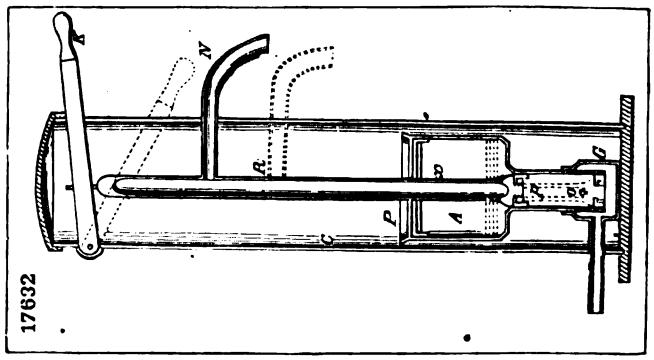
17632

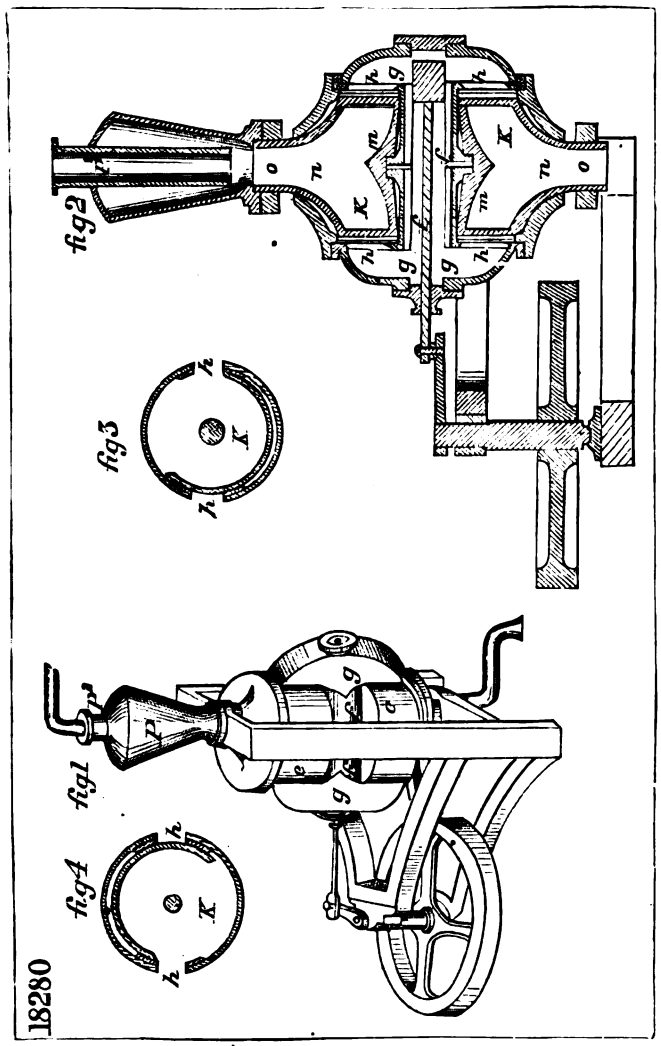
fig2
fig3
fig1
fig4
18280

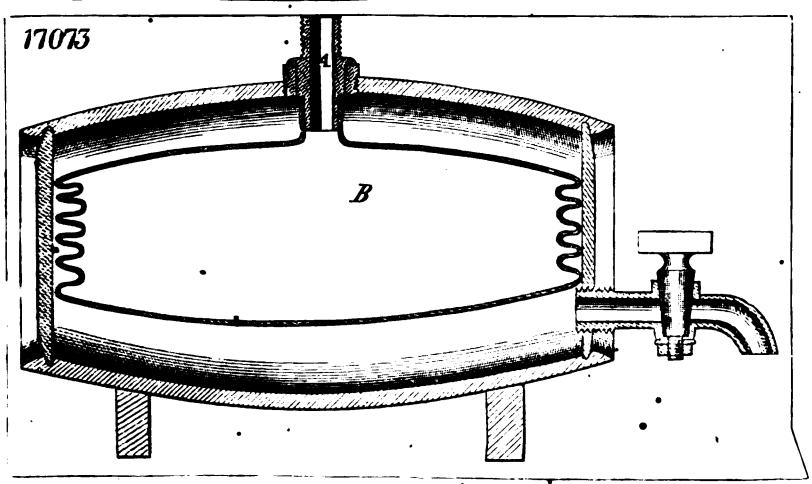
17073
B

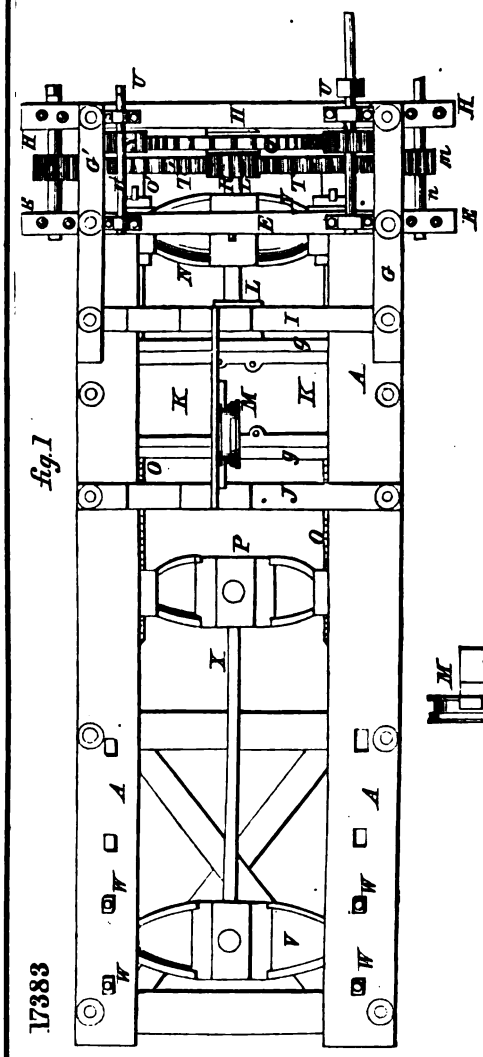

fig. 1

17383

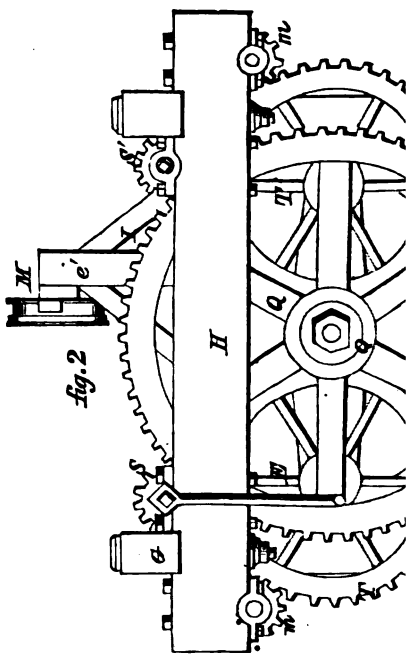

fig. 2

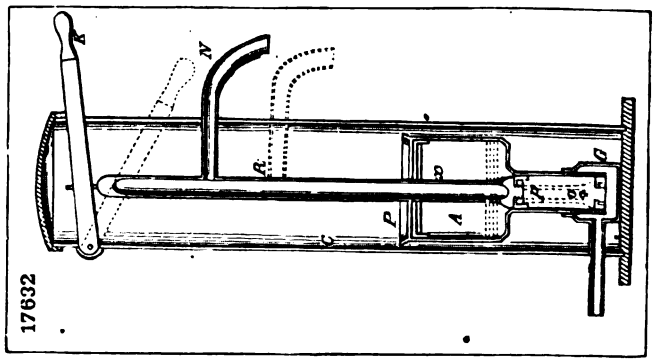

17632

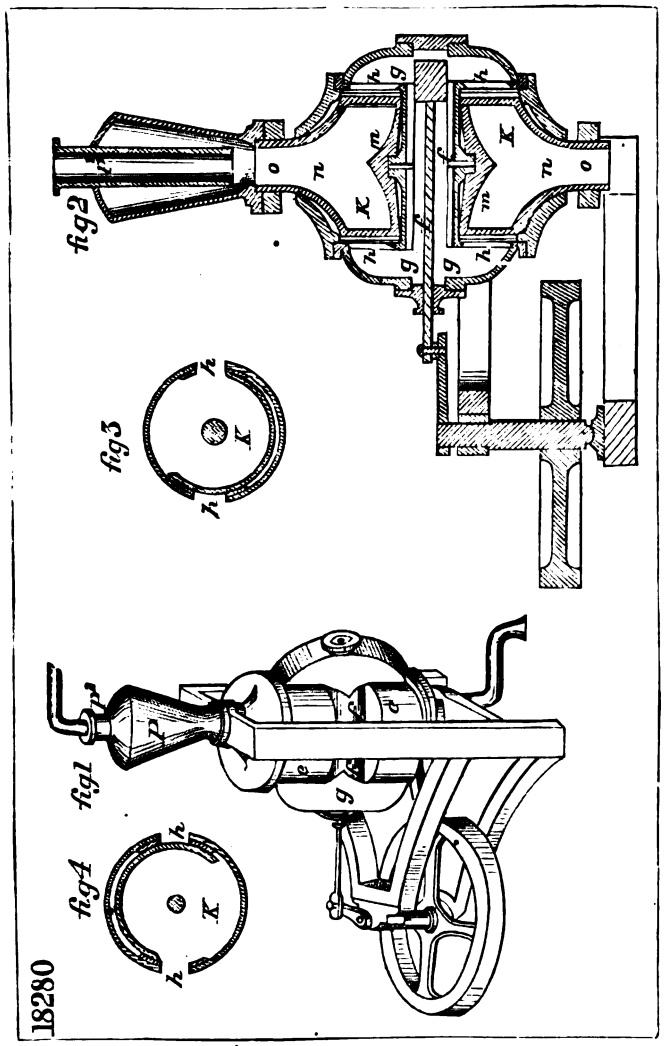
fig2
fig3
fig1
fig4
18280

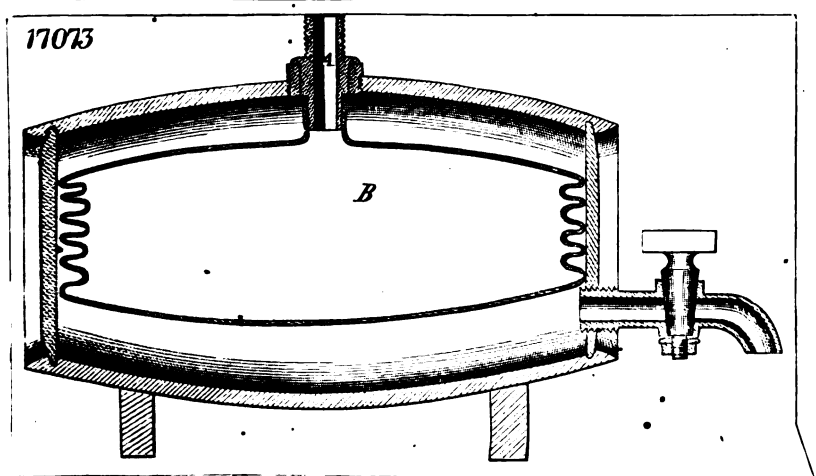
17073
B

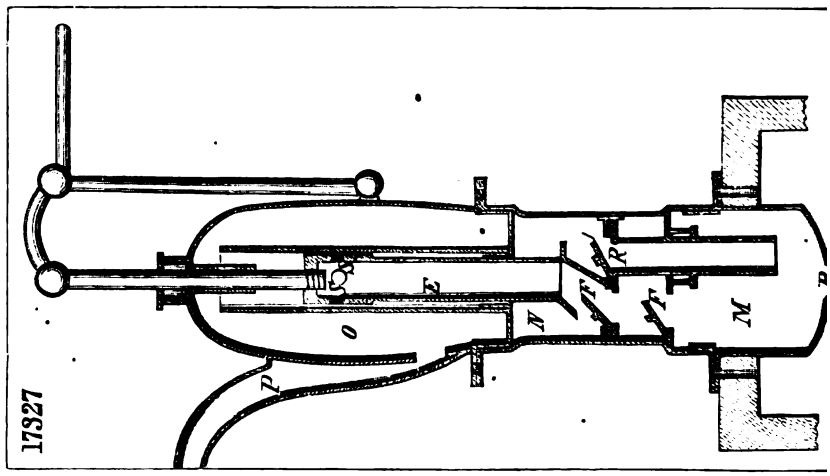
17327
P
O
E
N
T
R
M

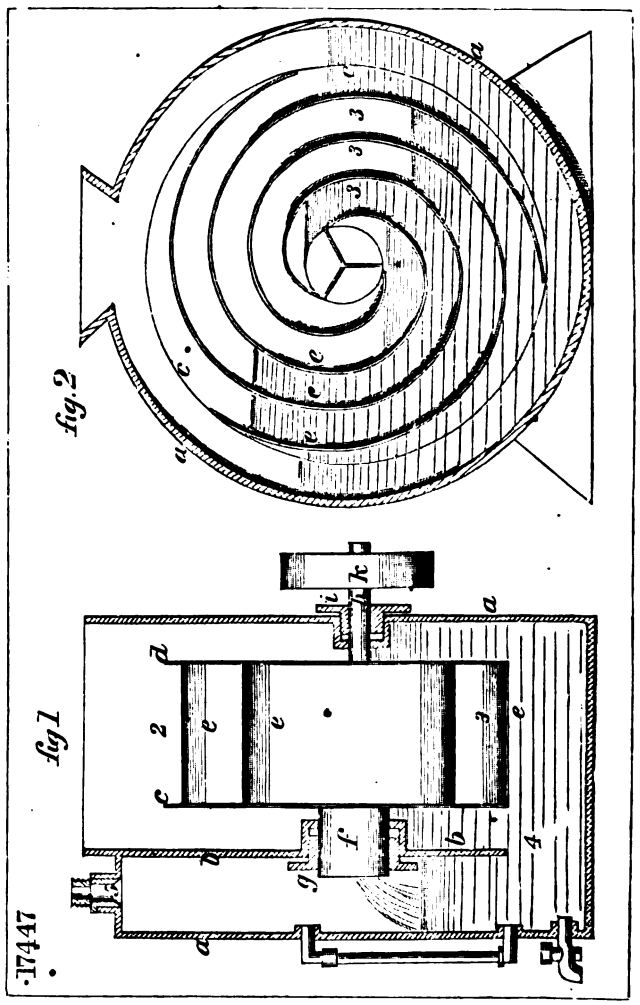
17447
fig.1
fig.2
a
b
c
d
e
f
g
h
i
k
1
2
3
4

17415

fig. 1

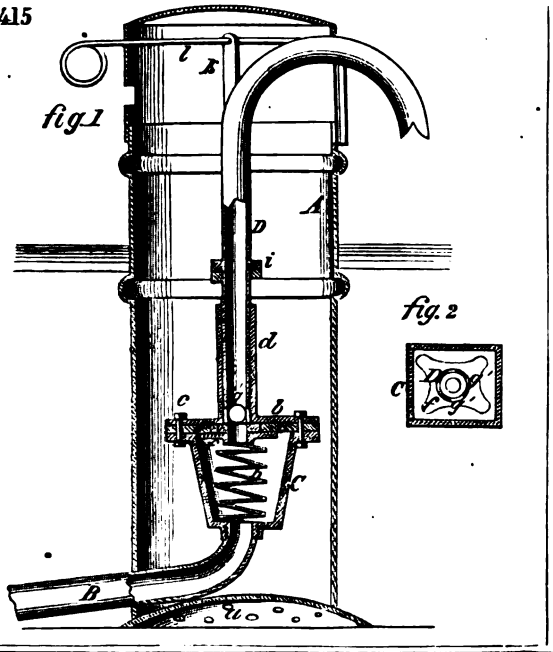

fig. 2

16983

fig. 1

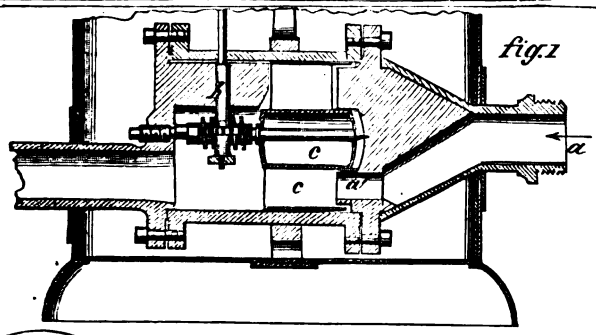

fig. 2

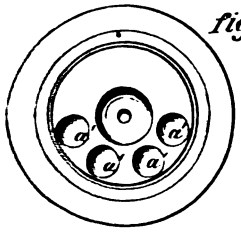

fig. 3

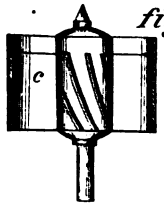

fig. 4

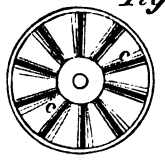

17154

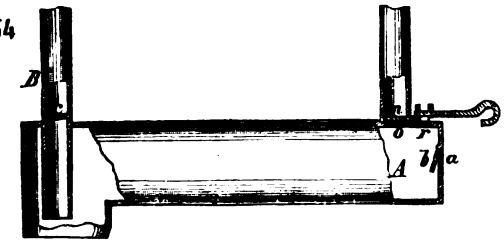

16558

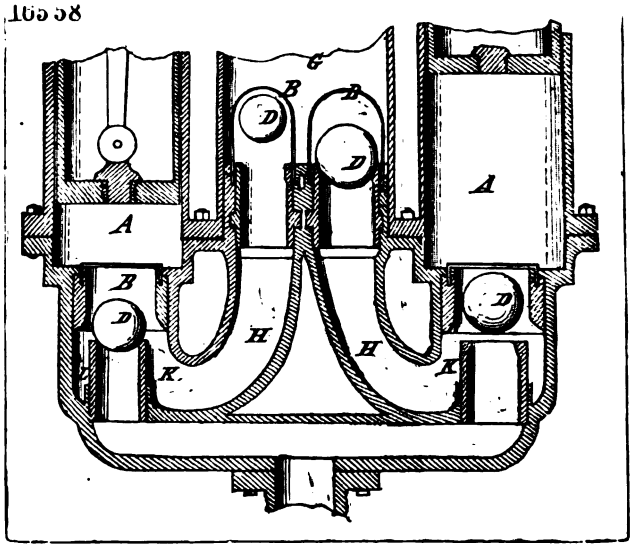

16785

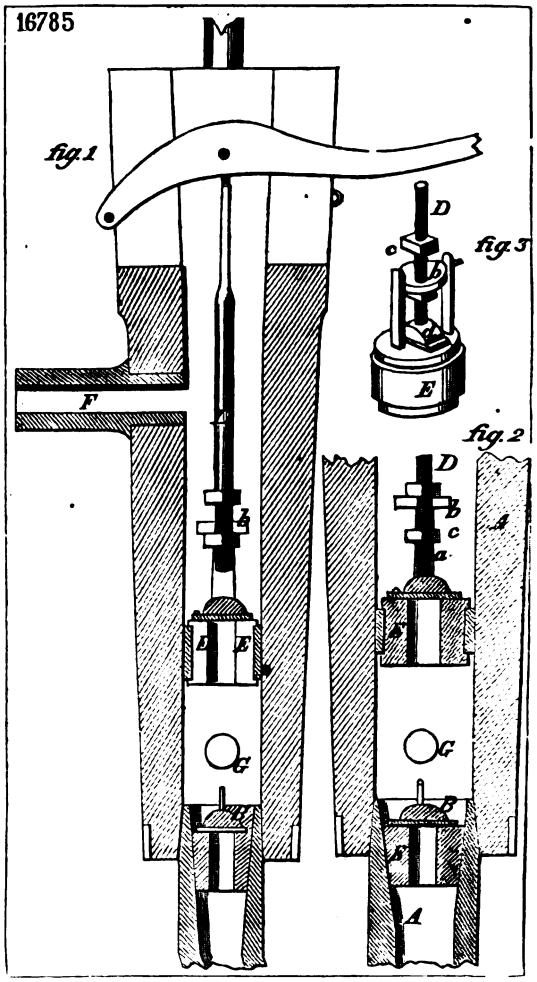

5705

fig 1

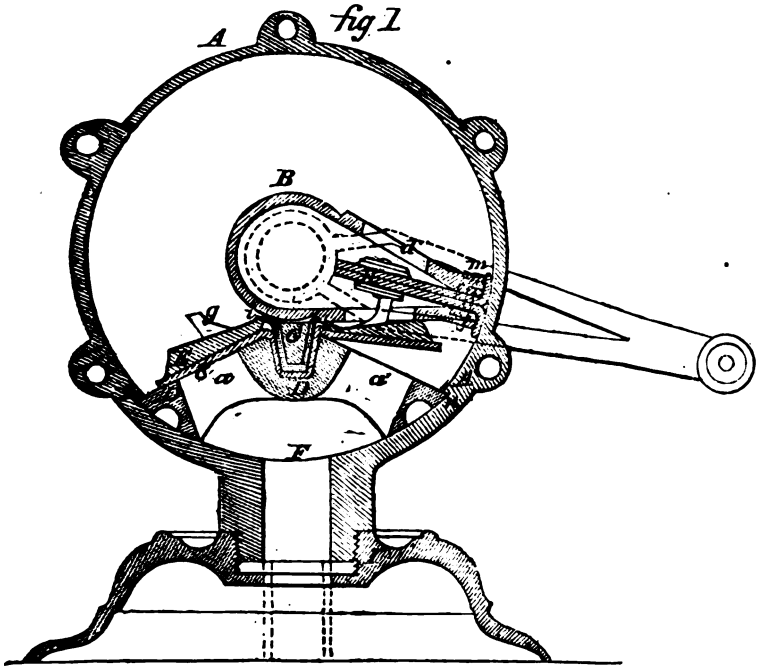

05

fig 2

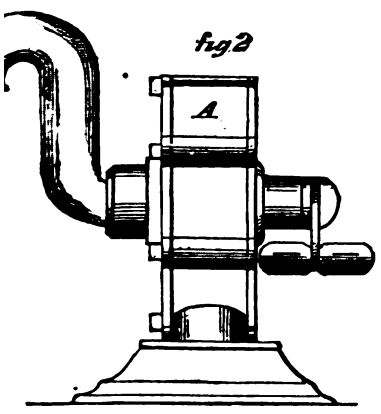

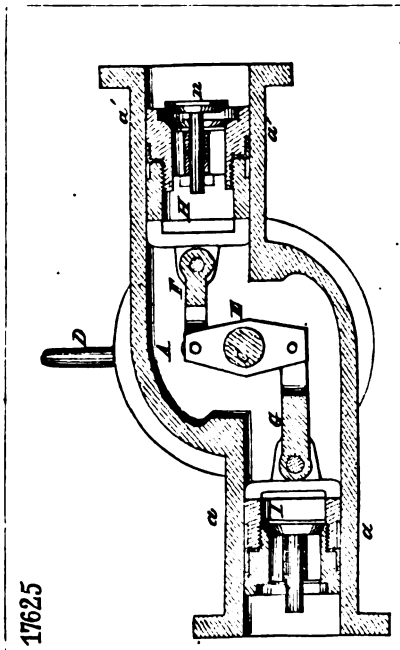

17625

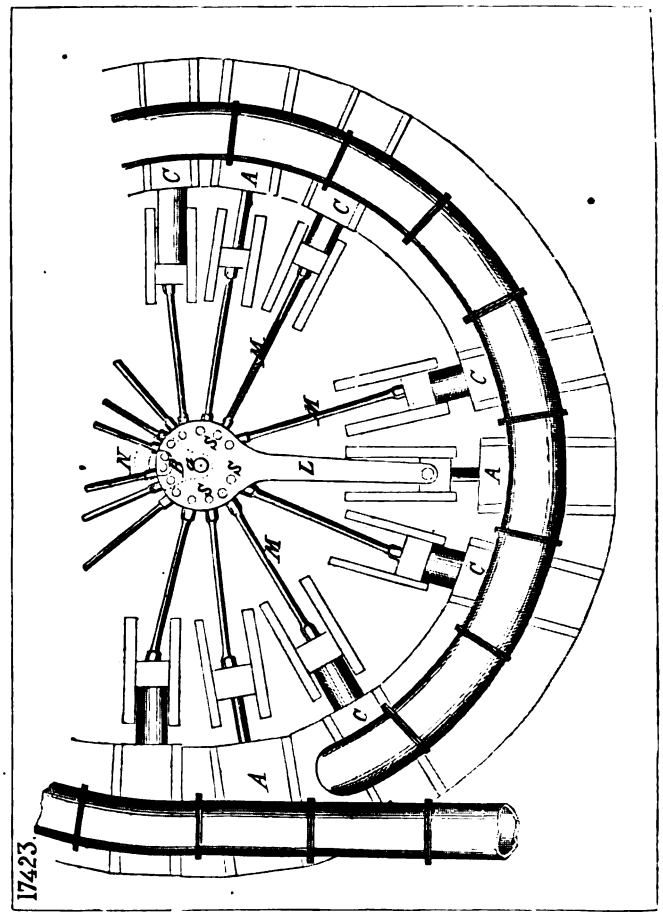

17423.

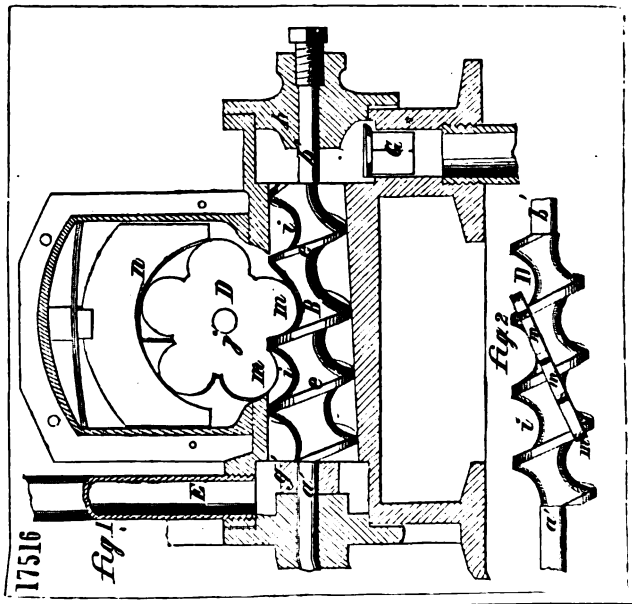

17516

fig. 1.

fig. 2.

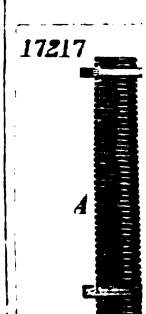

17217

718

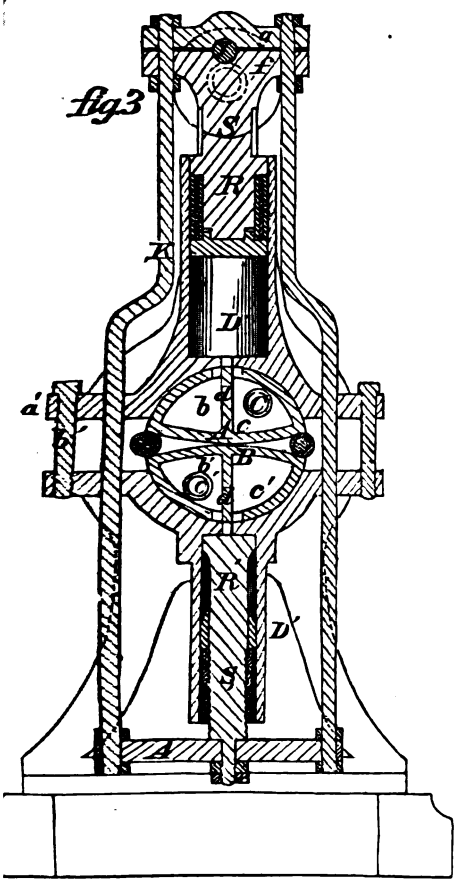

16603

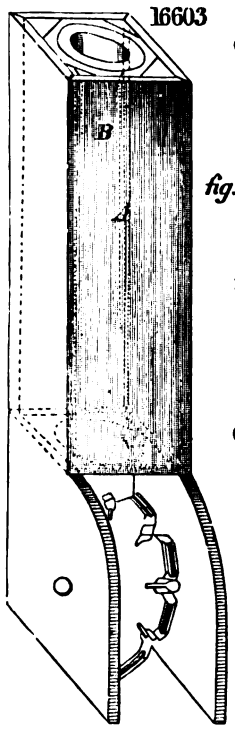

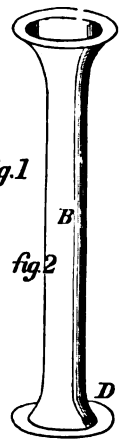

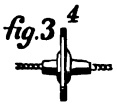

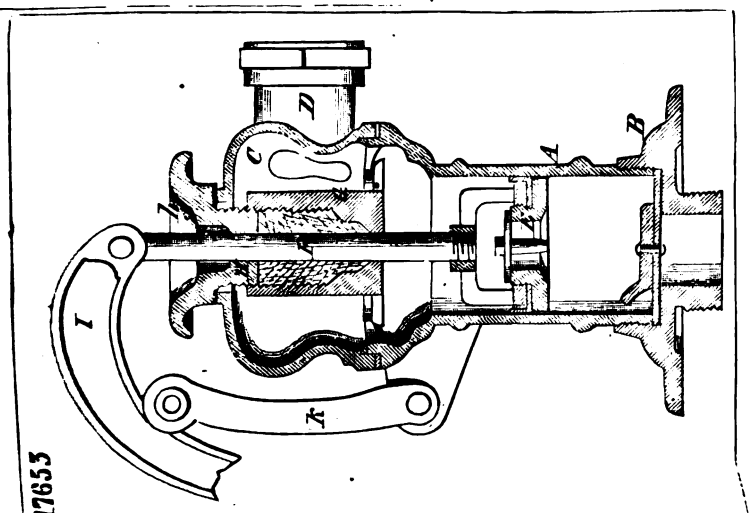

17653

18718

fig. 1

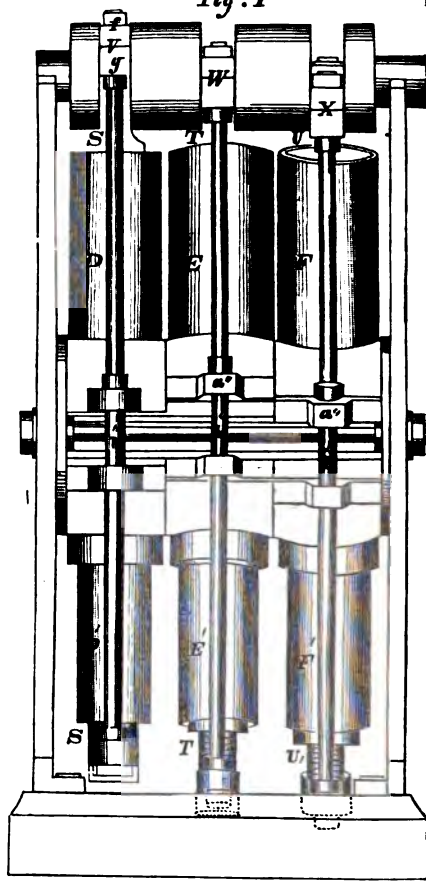

16373

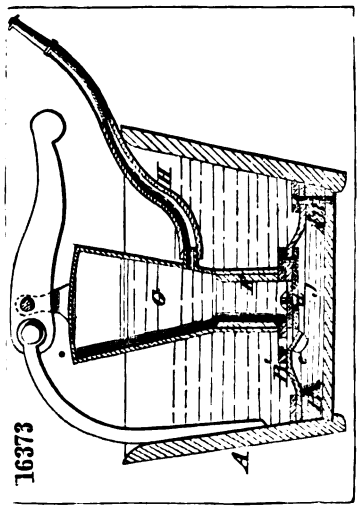

18309

fig. 1

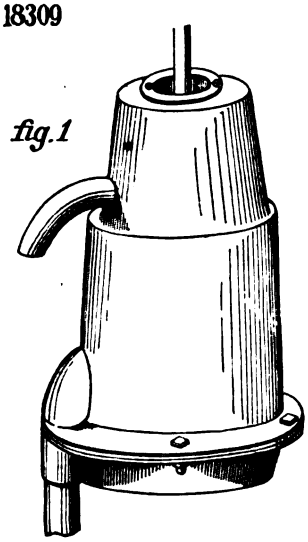

fig. 2

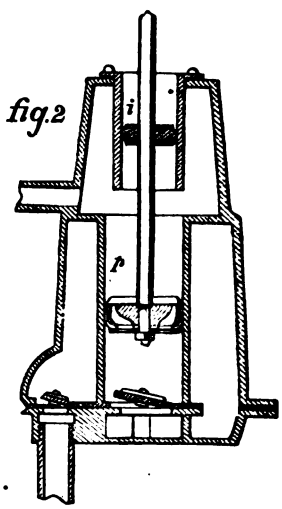

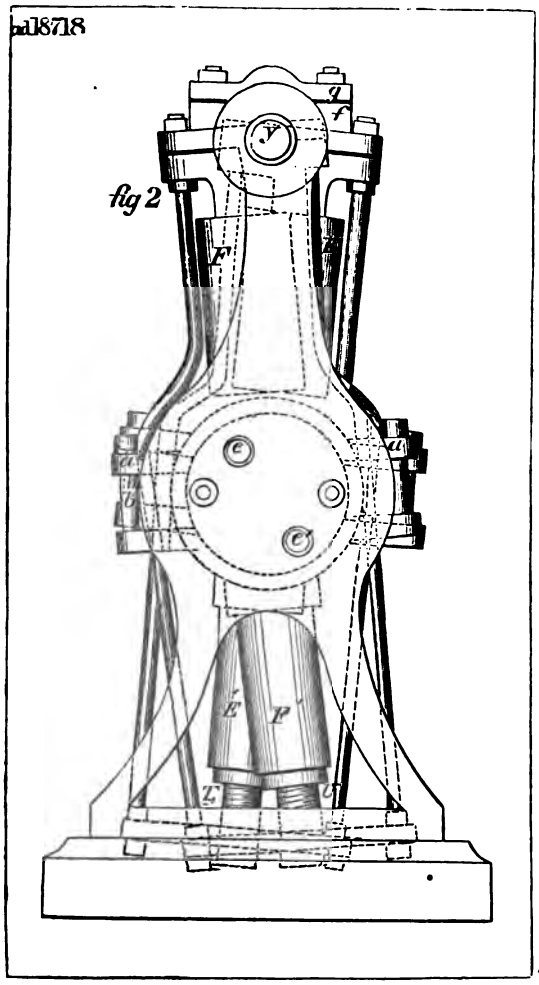
18718
fig 2

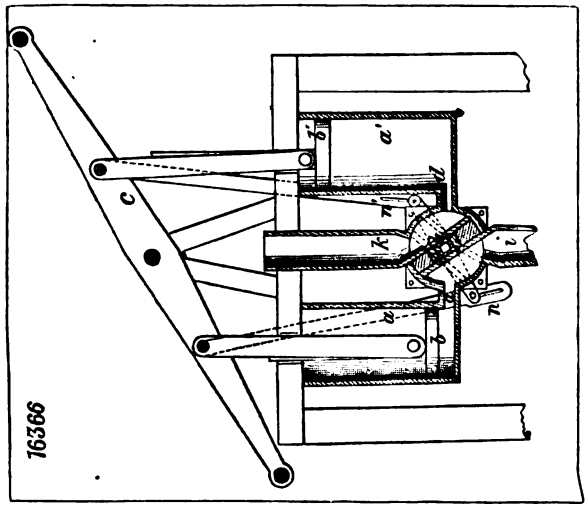
16366

17768

fig. 1

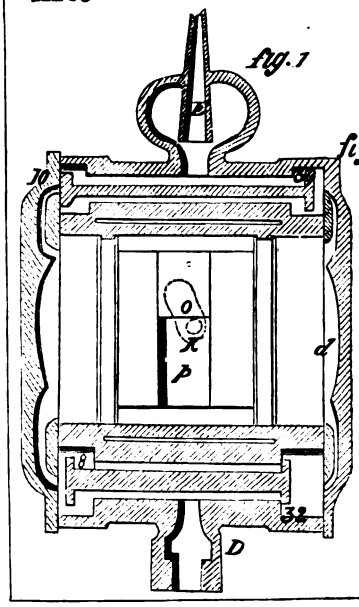

fig. 2

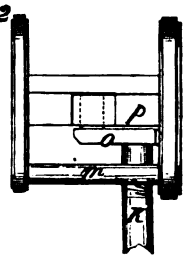

16327

fig. 1

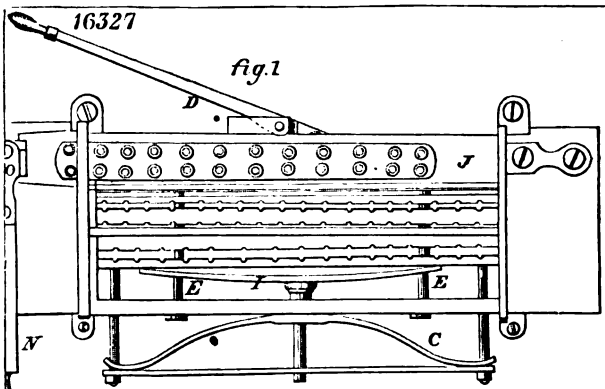

fig. 2

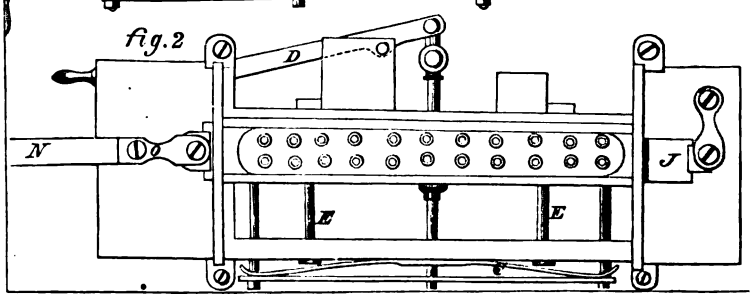

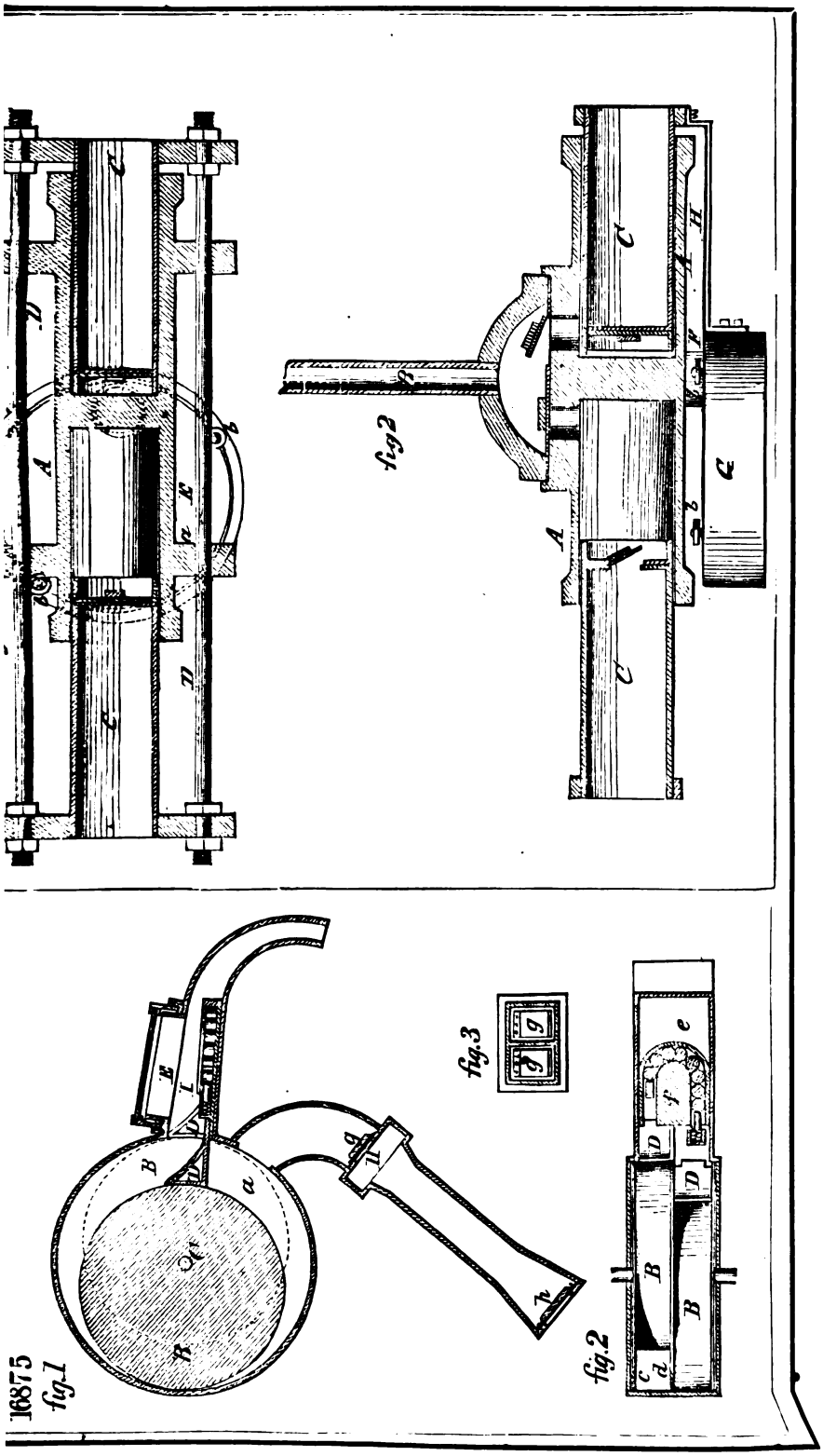
16875
fig.1
fig.2
fig.3
fig.2

19003

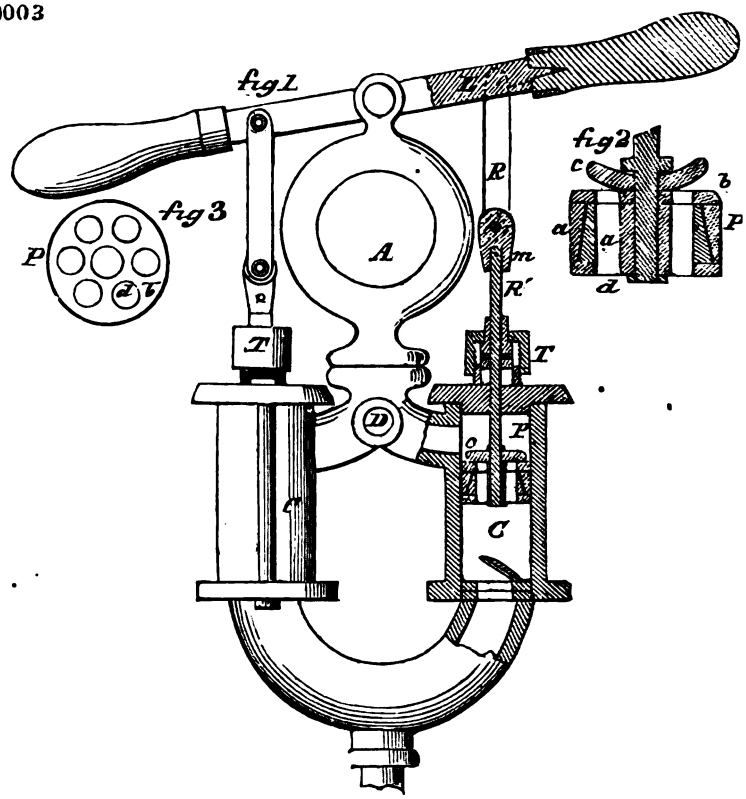

18870

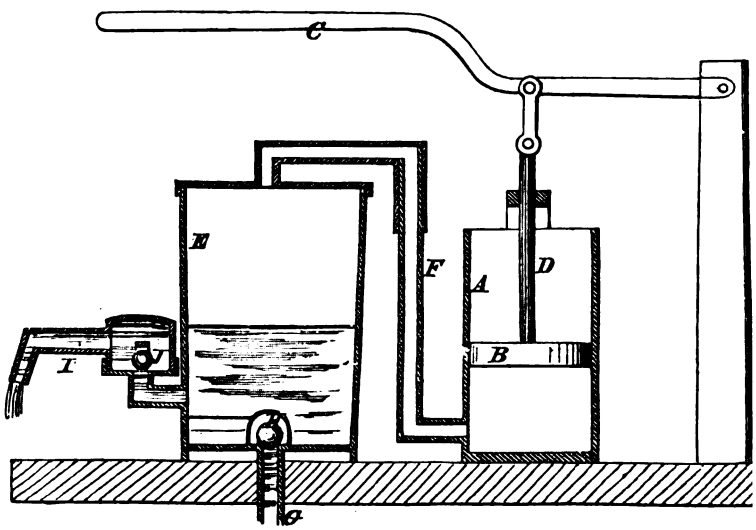

18559

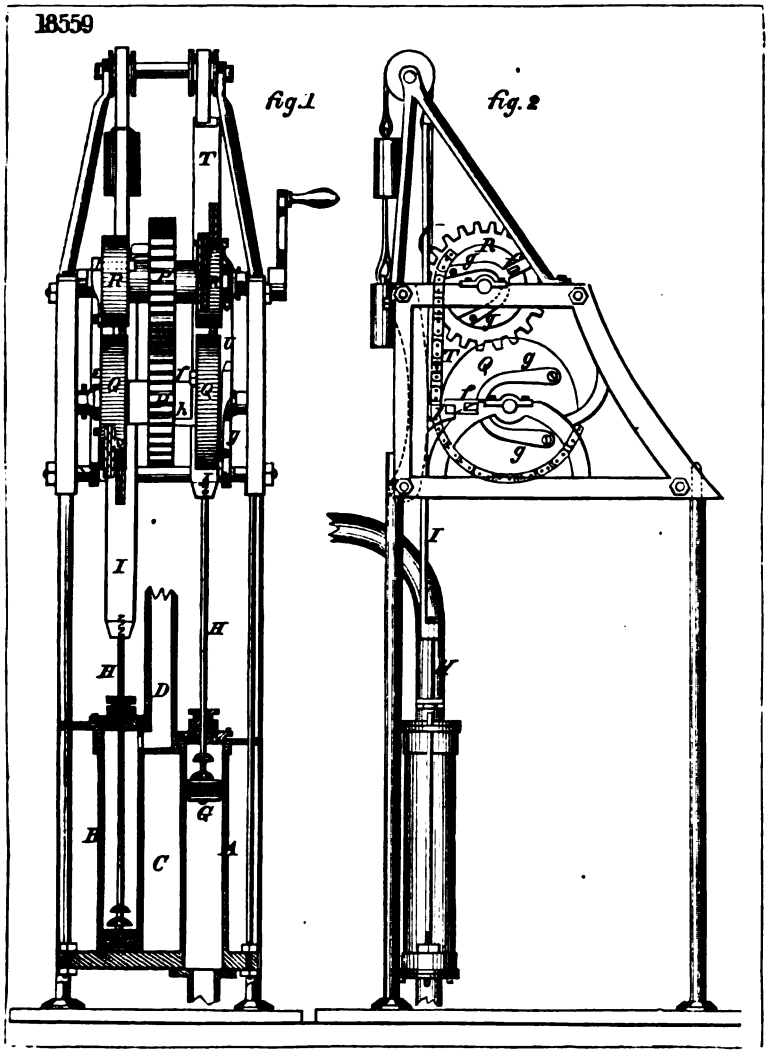

ad16869

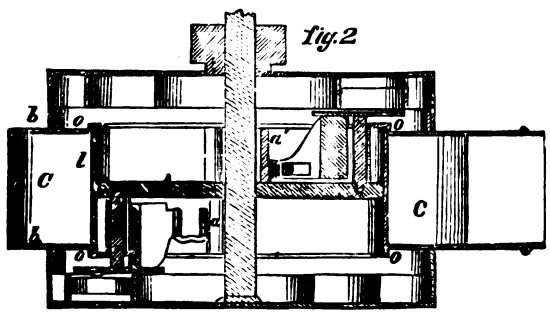

16869

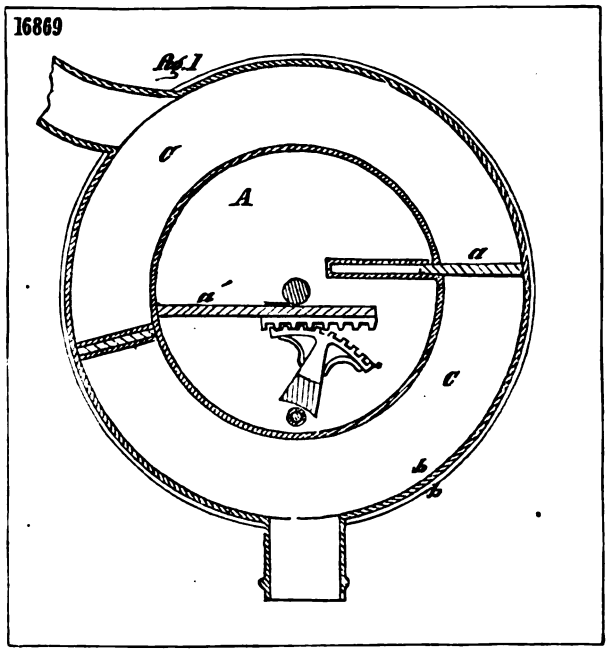

16974

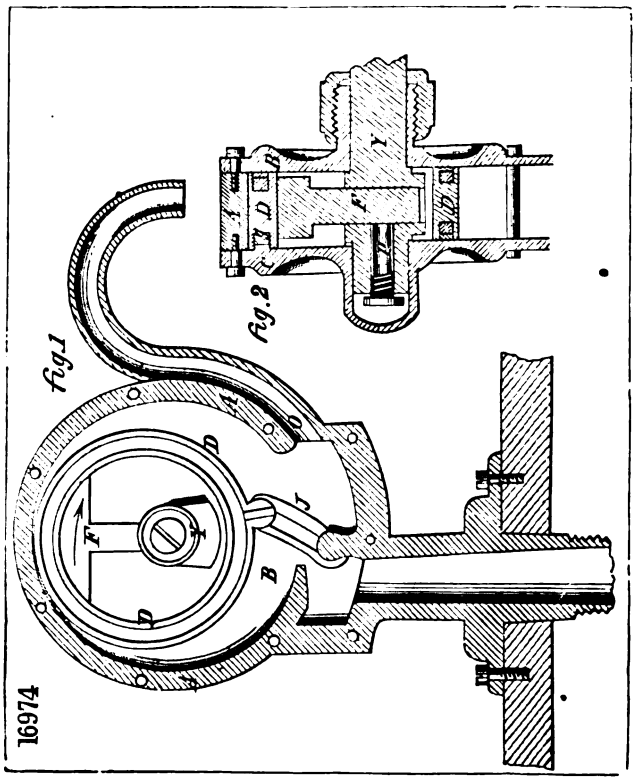

17820

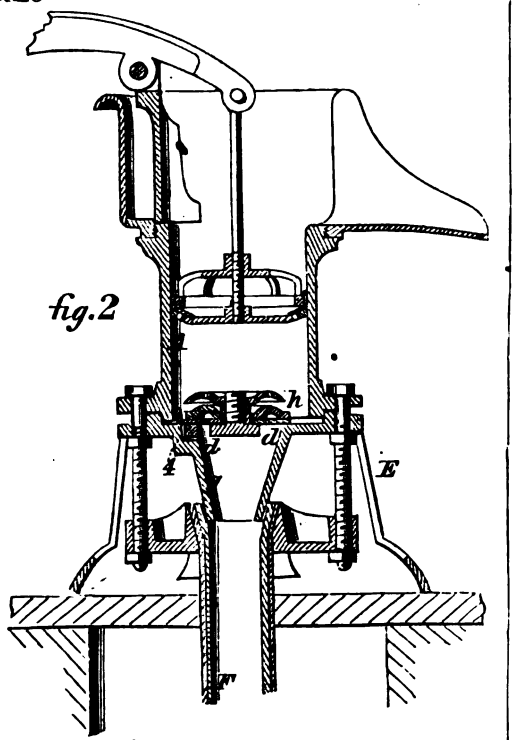

fig.2

fig.1

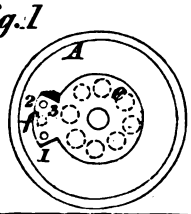

18488

fig.1

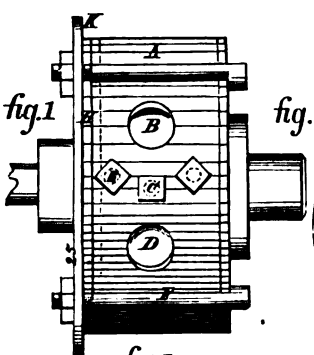

fig.2

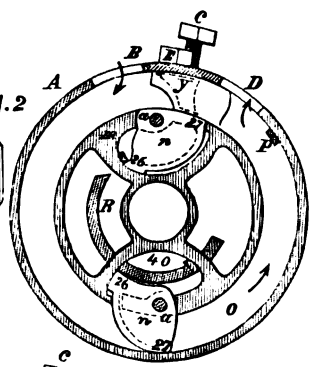

fig.3

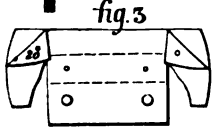

fig.4

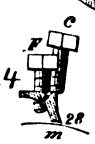

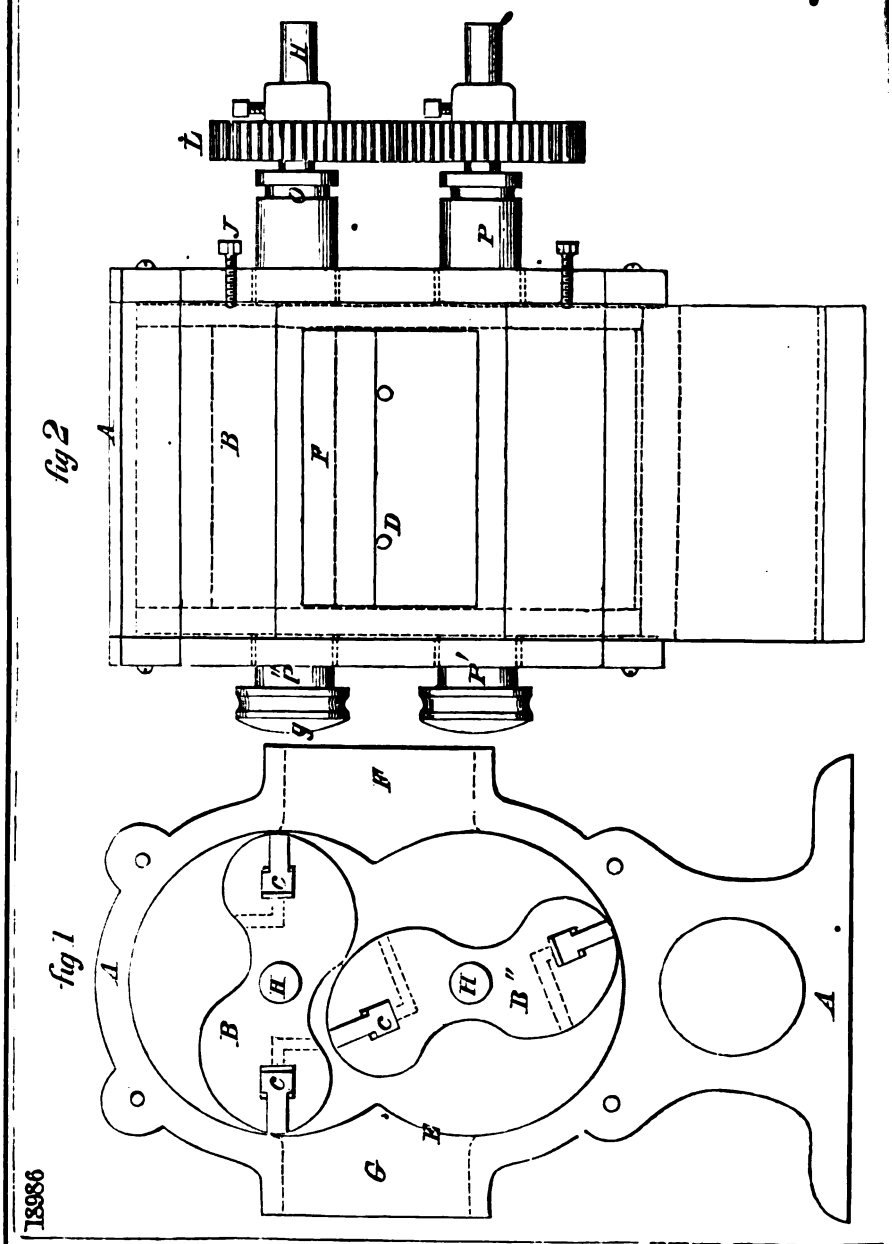
fig 2
H
L
J
P
A
B
F
D
P''
P'
g
fig 1
F
C
H
B
B''
A
E
G
18986

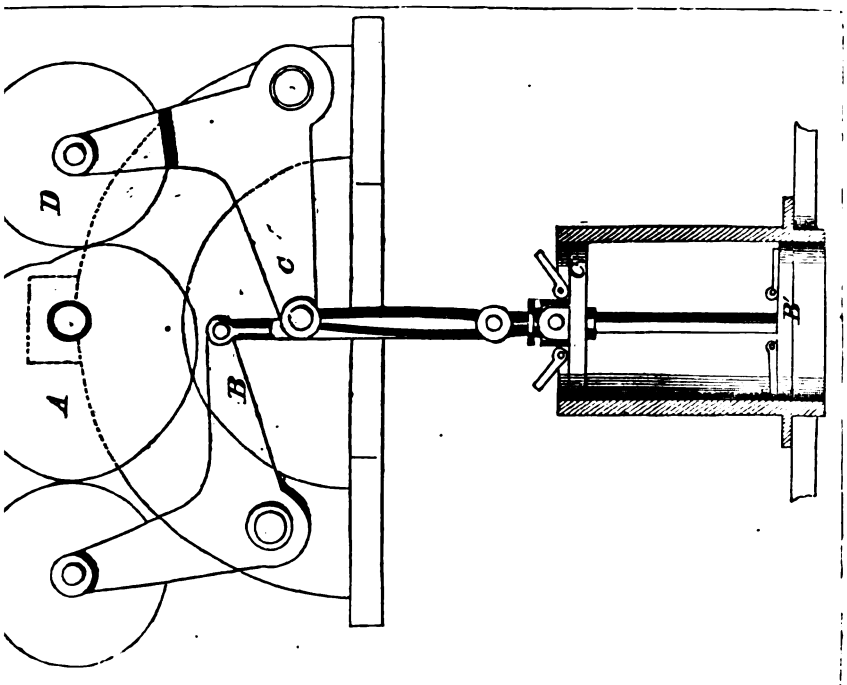

04

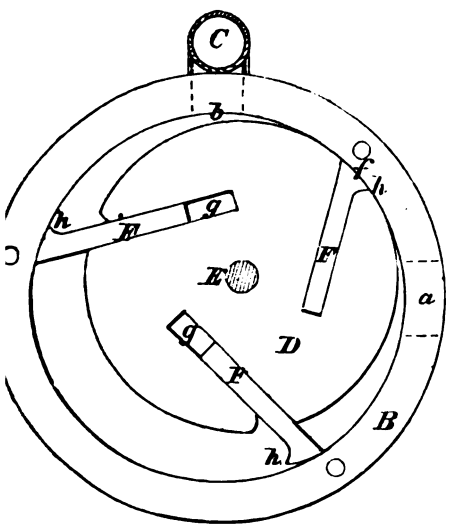

17503

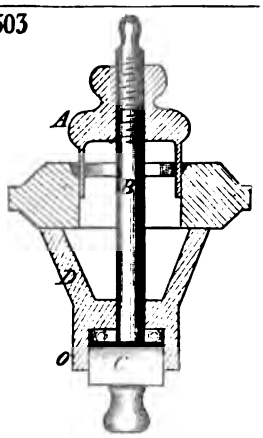

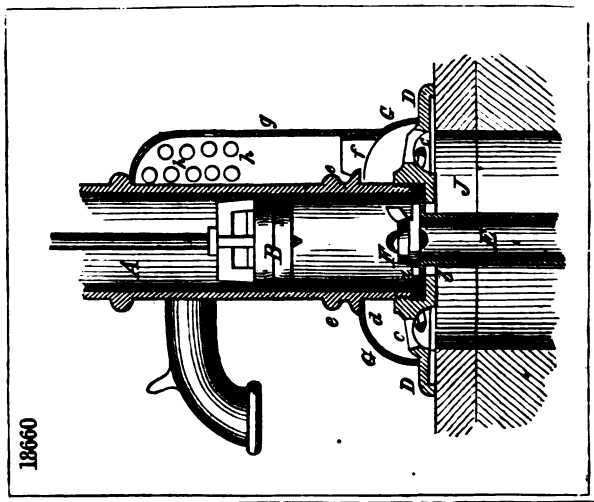
18660

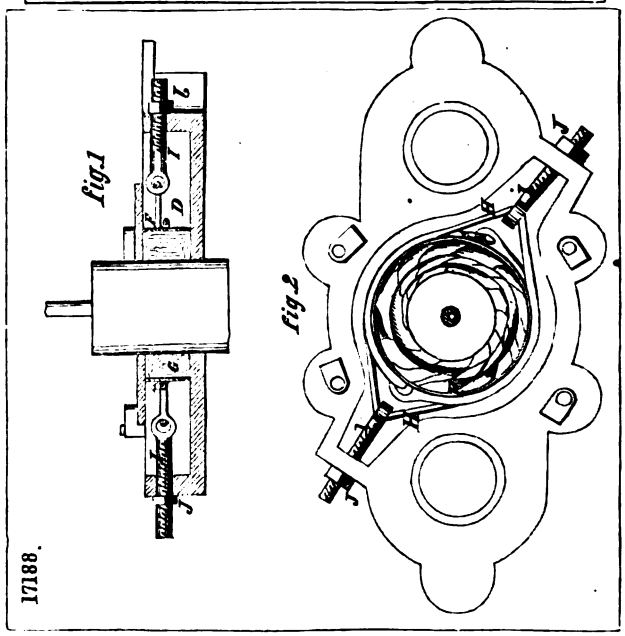
17188.
Fig 1
Fig 2

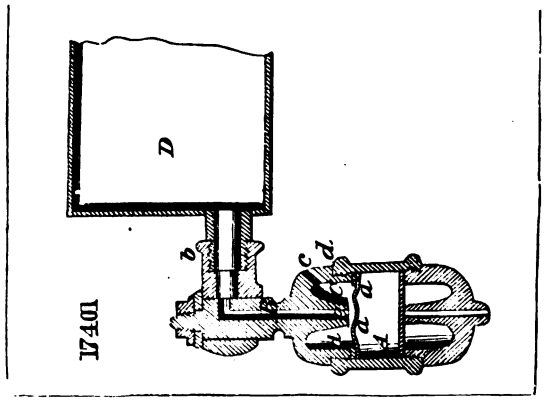
17401
D

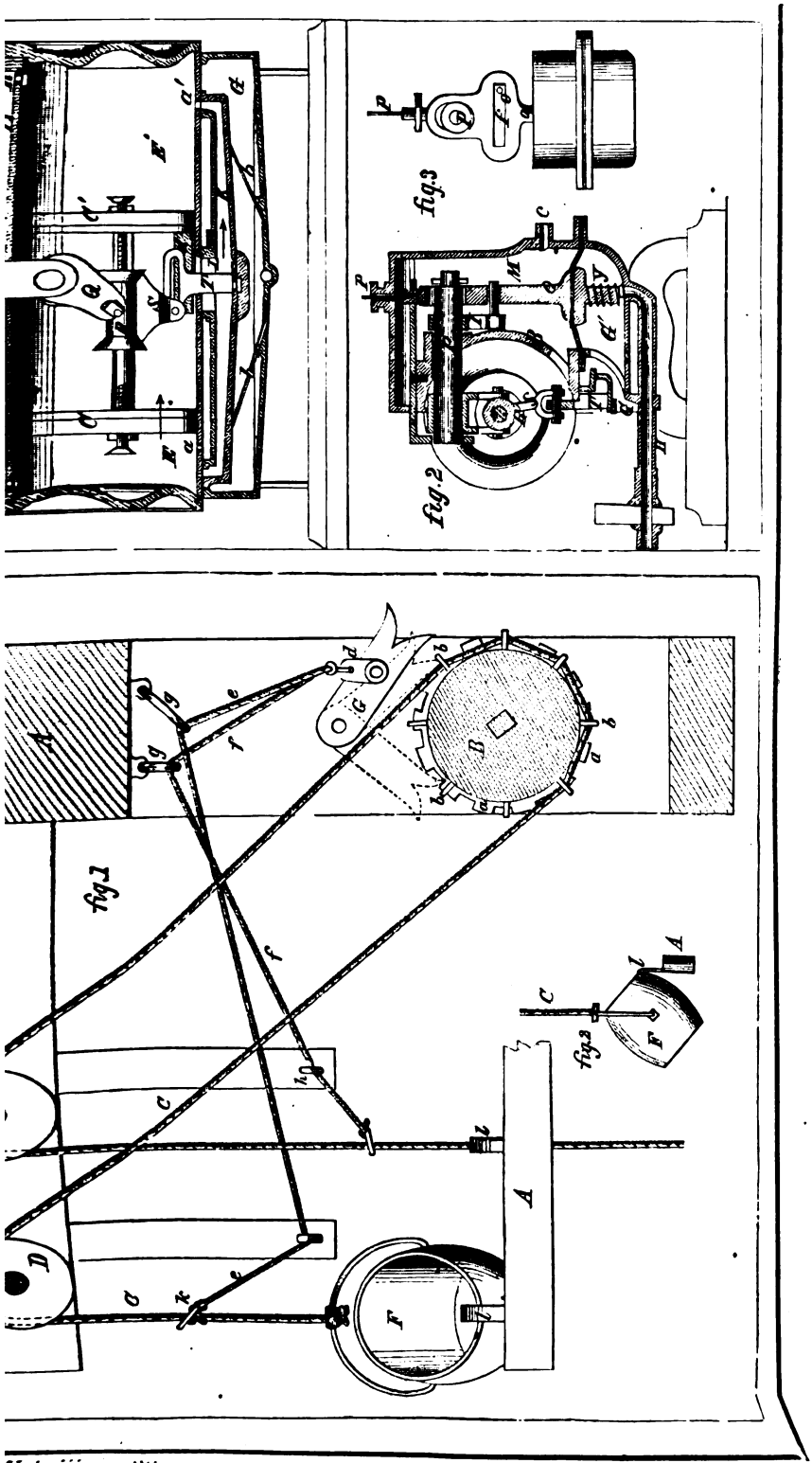
fig.1
fig.2
fig.3
fig.3

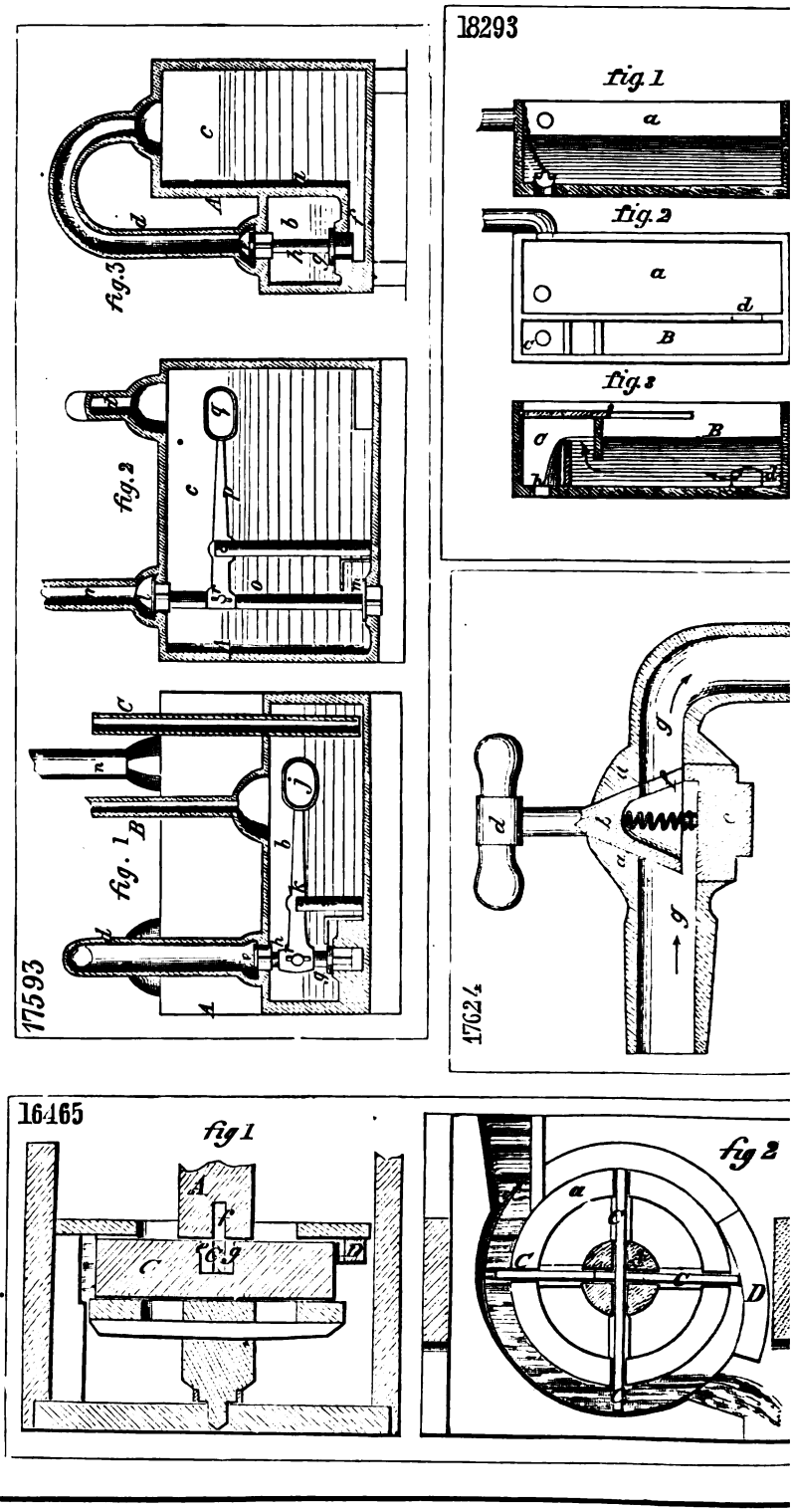
18293
fig. 1
fig. 2
fig. 3
fig. 3
fig. 2
fig. 1
17593
17624
16465
fig 1
fig 2

97

fig1

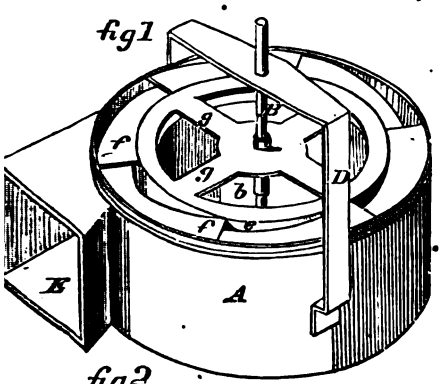

fig2

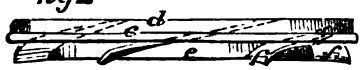

fig3

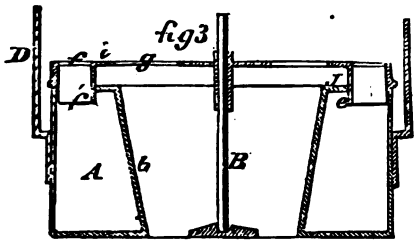

16432

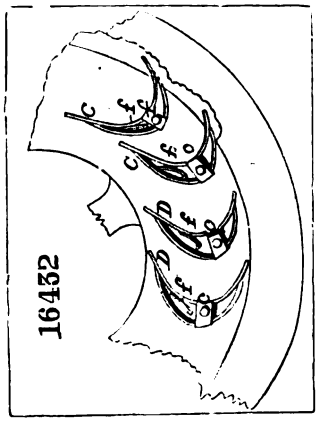

17113

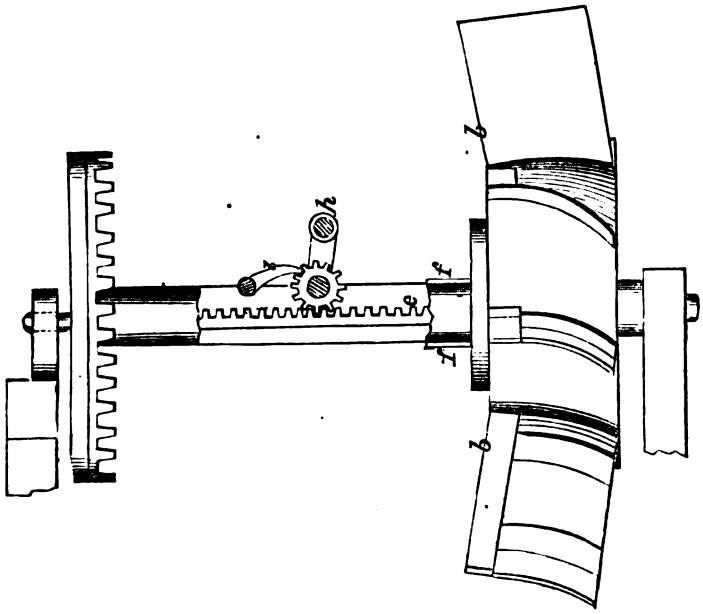

17041

fig.1

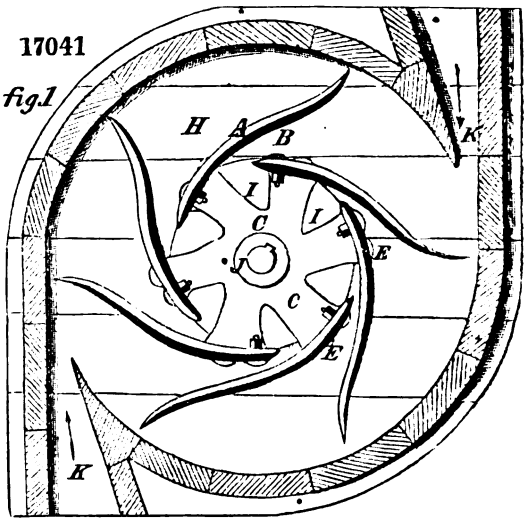

fig.2

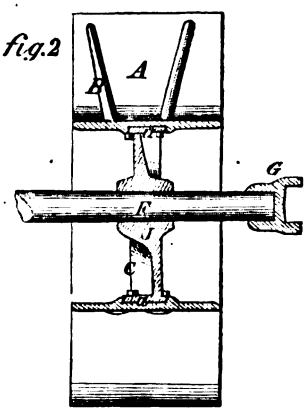

fig.3

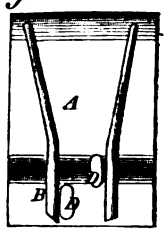

16881

fig.1

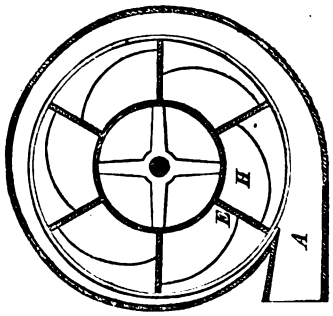

fig.2

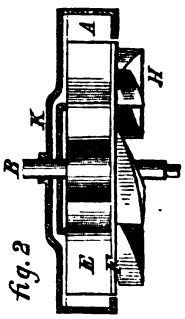

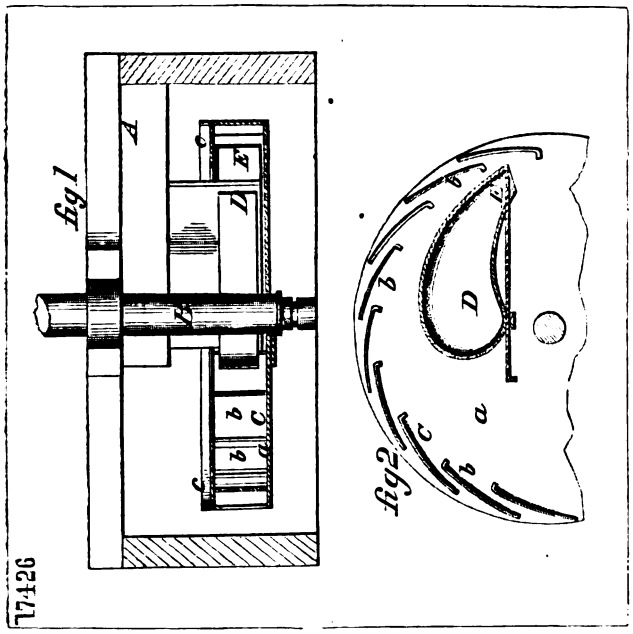
fig 1
fig 2
17426

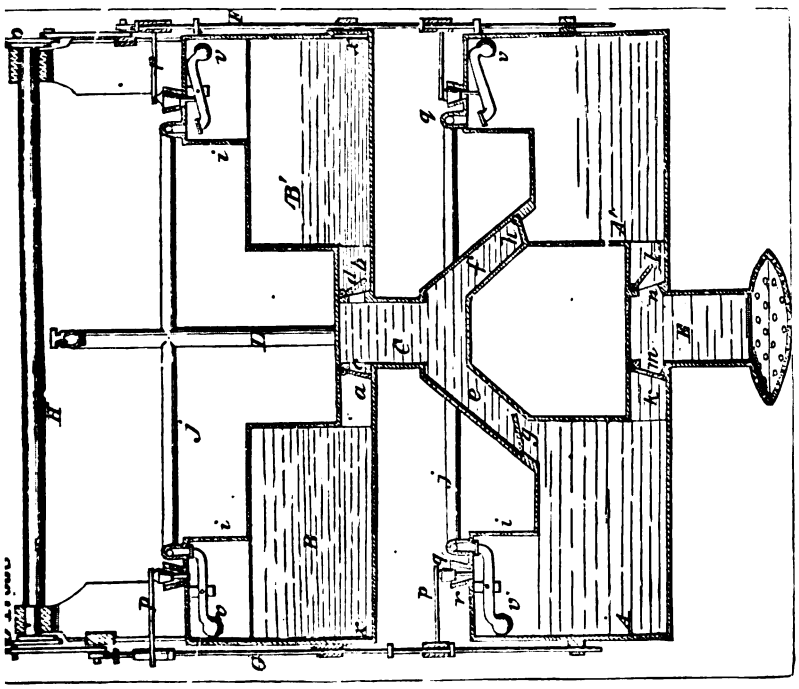

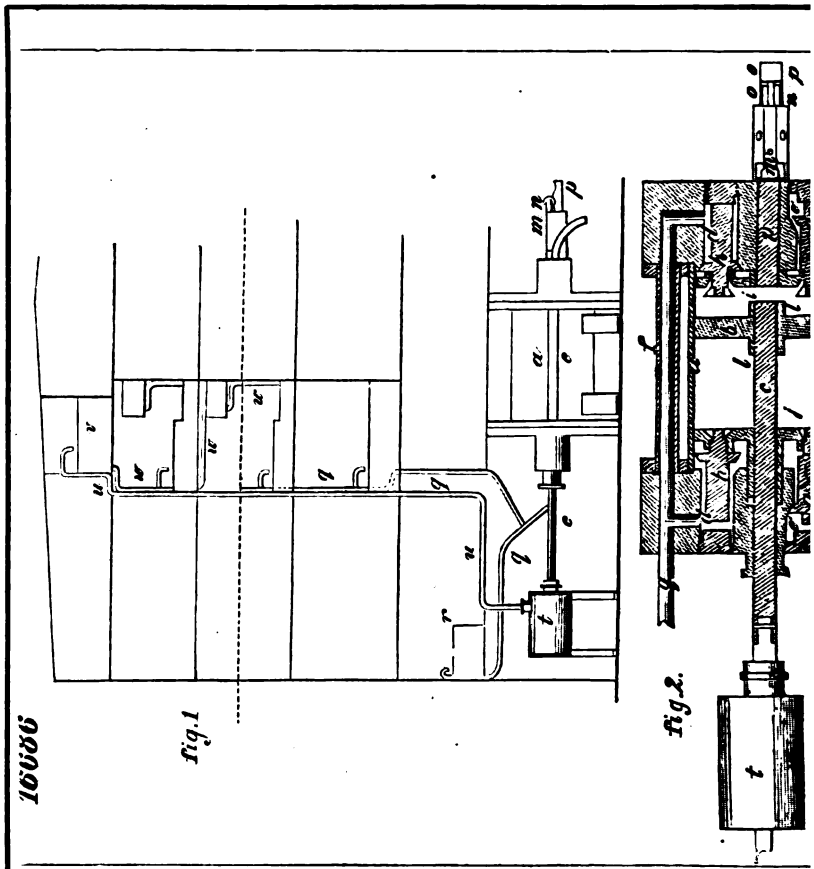
16696
Fig. 1.
Fig. 2.

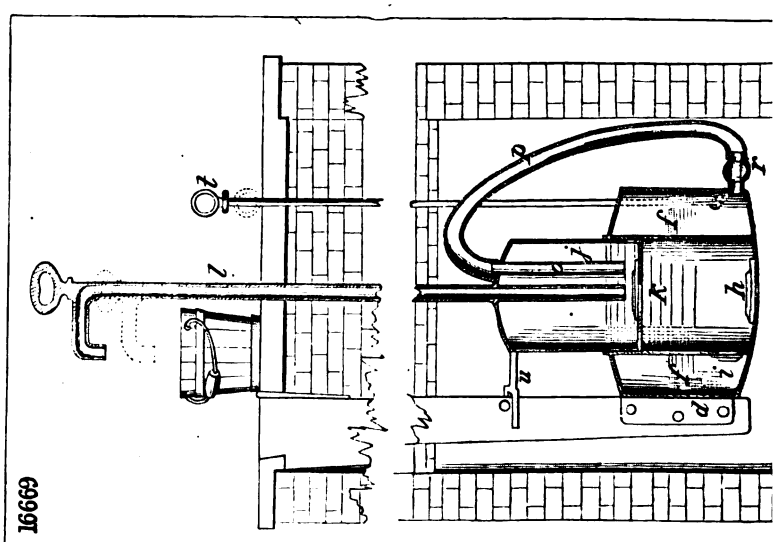
16669

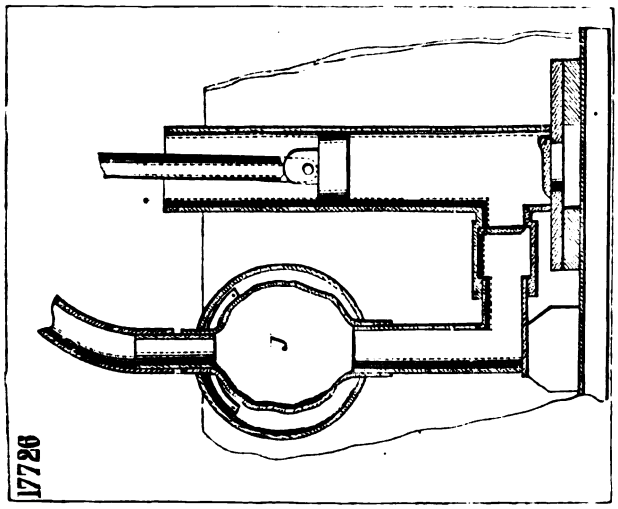

16975

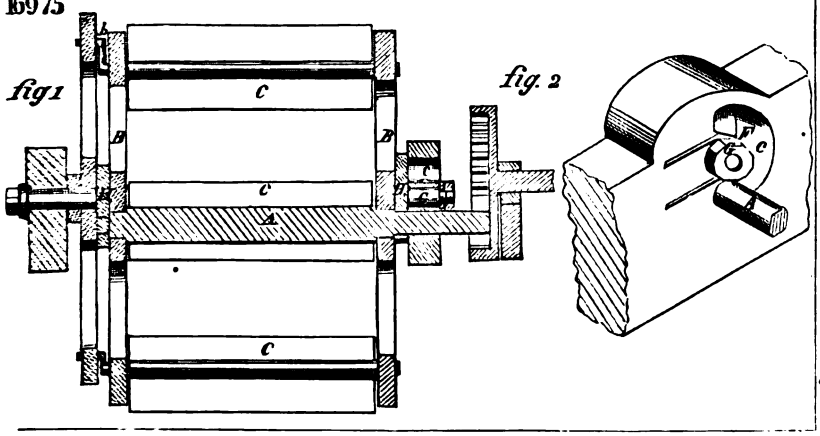

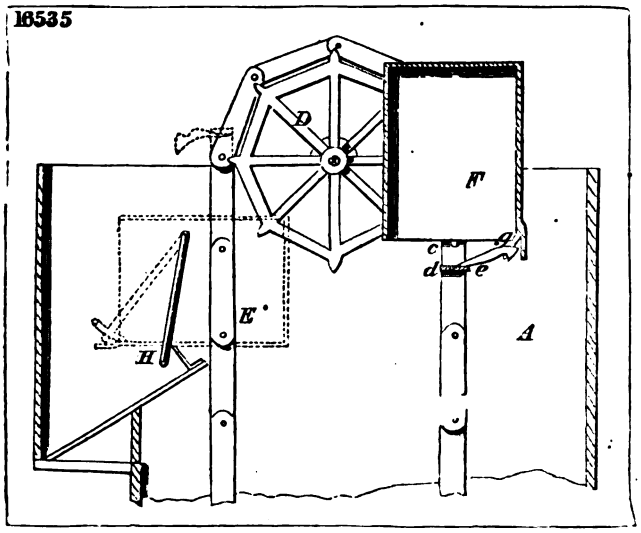

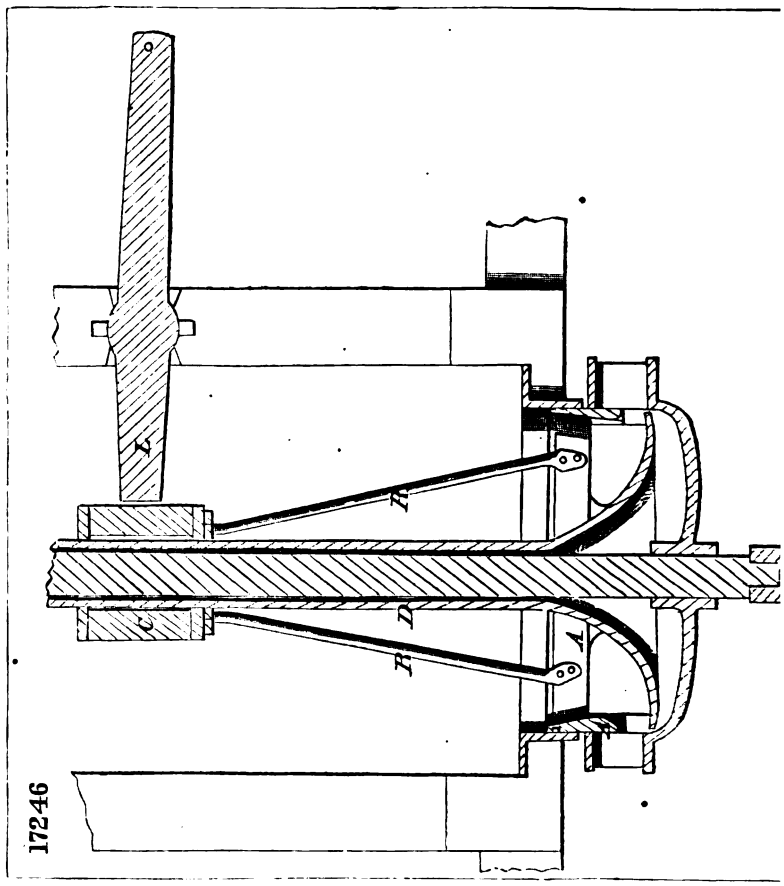
17246

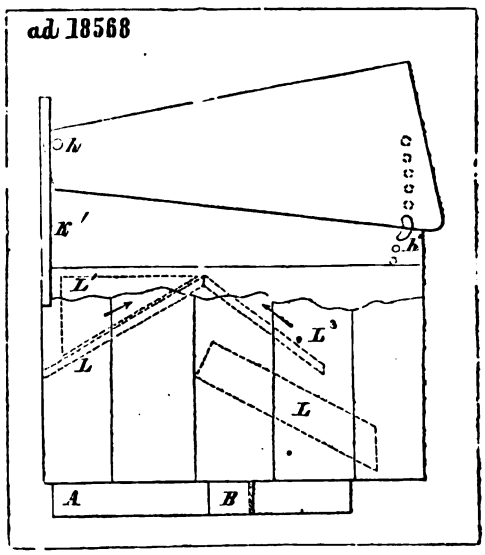
ad 18568
A
B

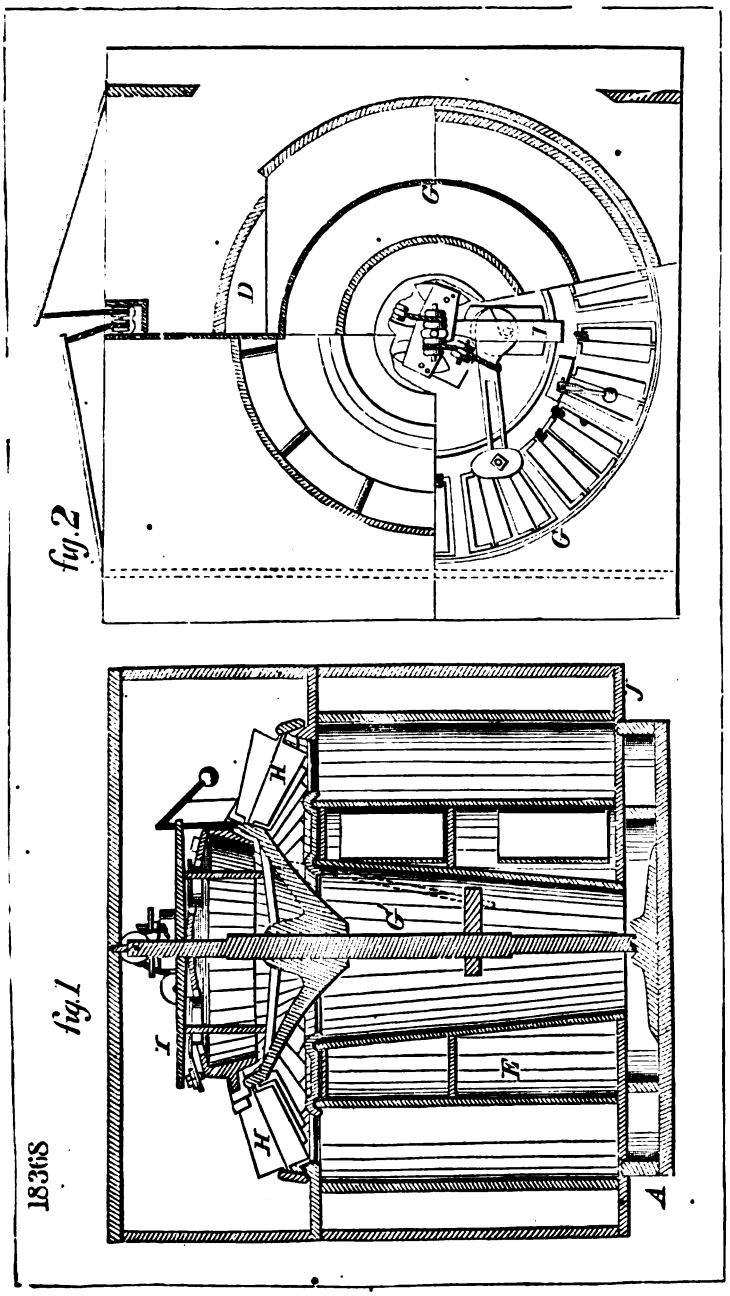
fig.2
fig.1
18368
D
G
I
H
E
A
J

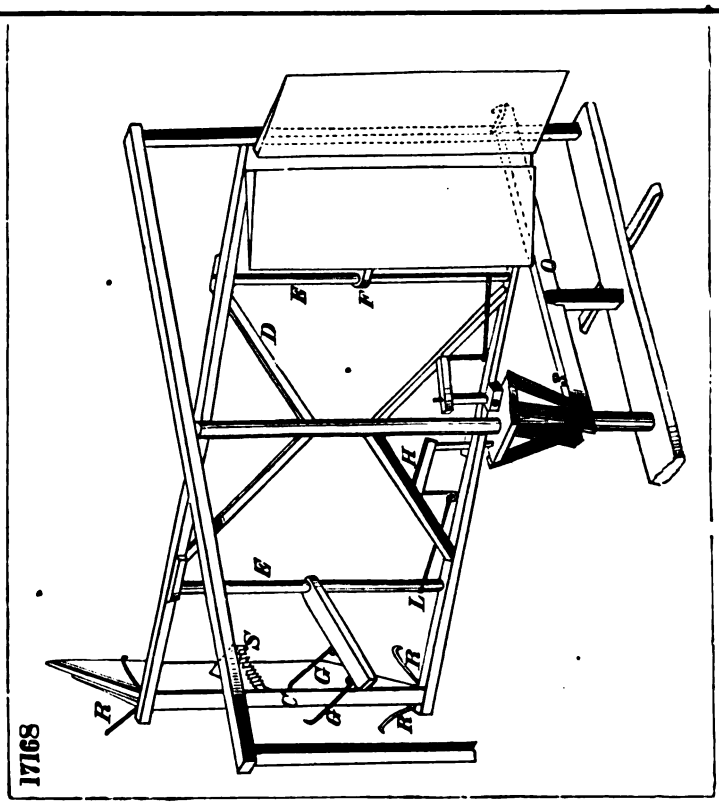
17168
R
S
C
G
G
R
R
L
E
H
D
E
F
O

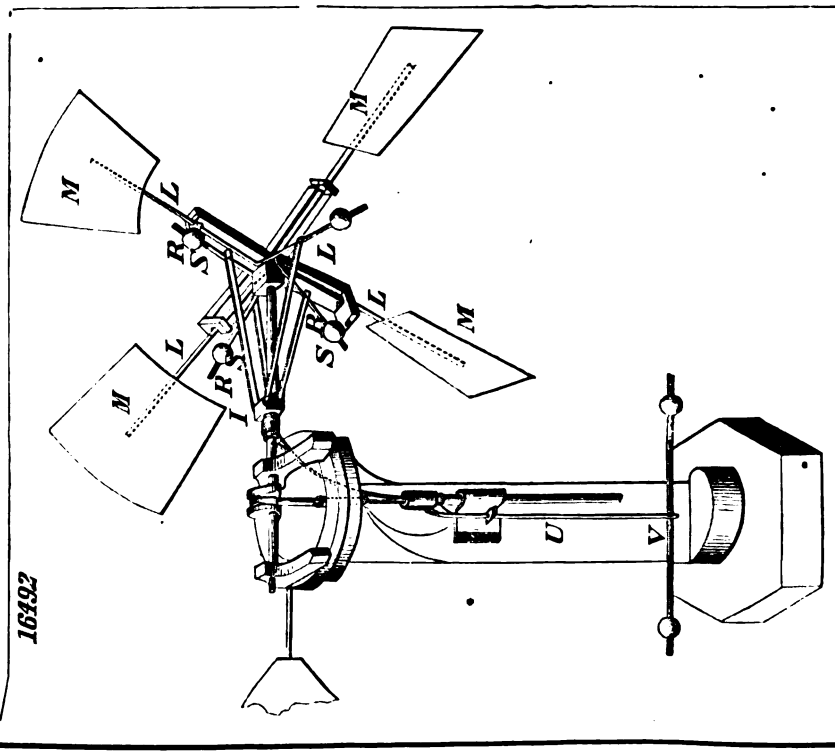
16492
M
L
R
S
I
M
L
R
S
M
L
R
S
M
L
U
V

17862

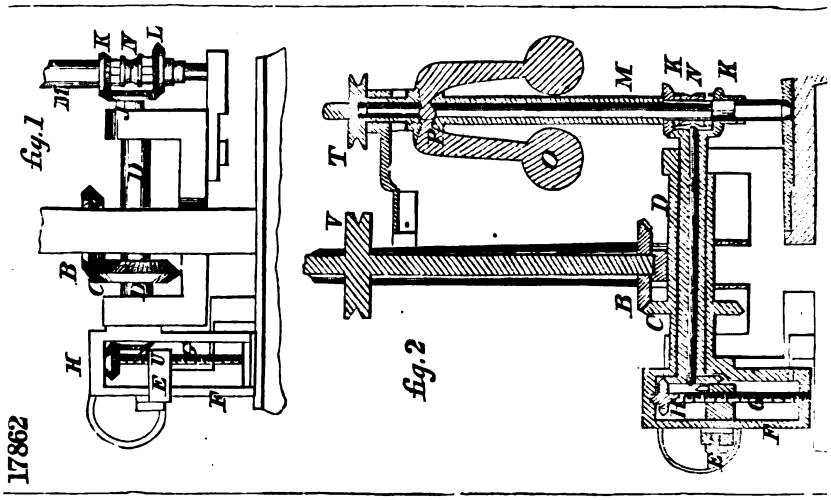

16616

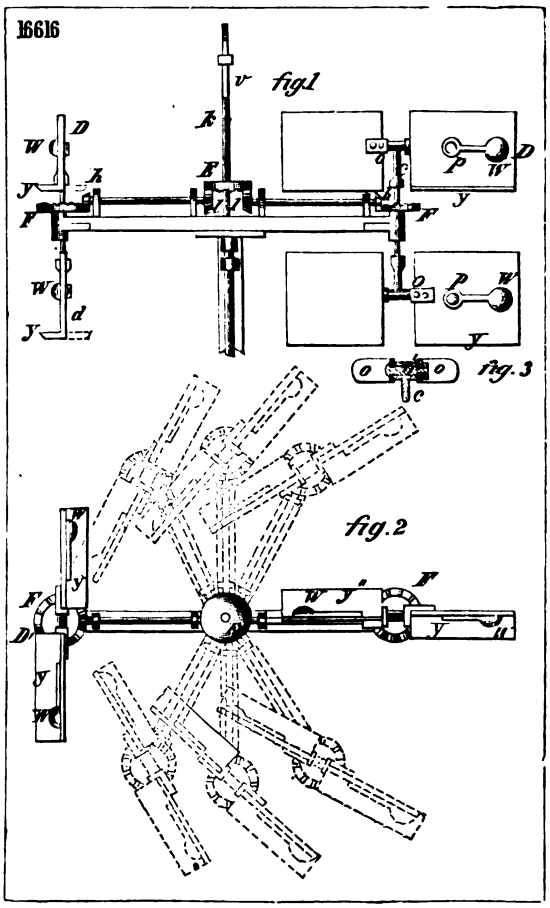

16818

fig.1

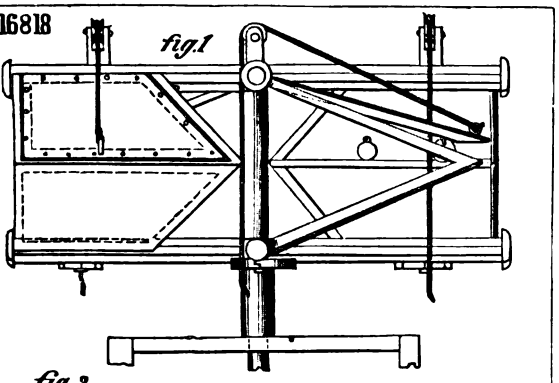

fig.2

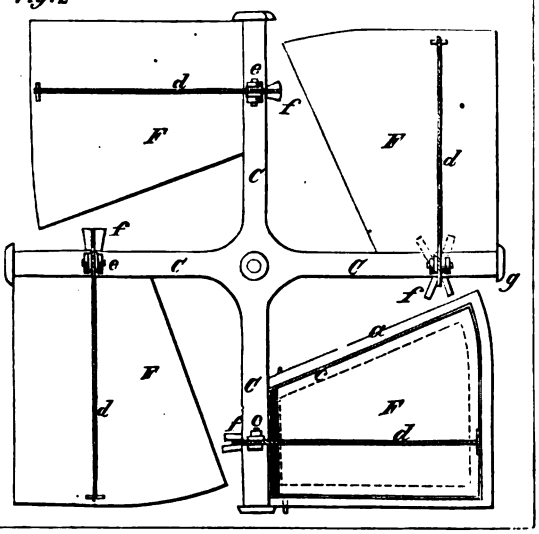

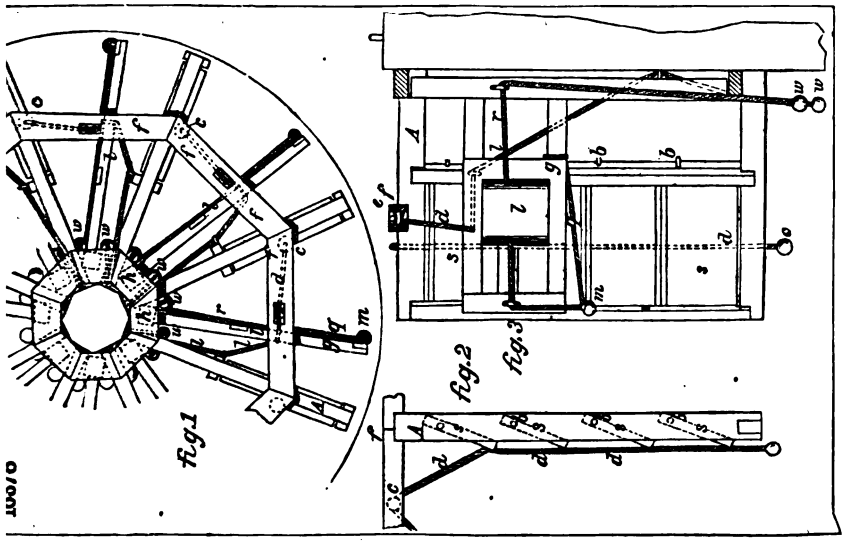

16893.

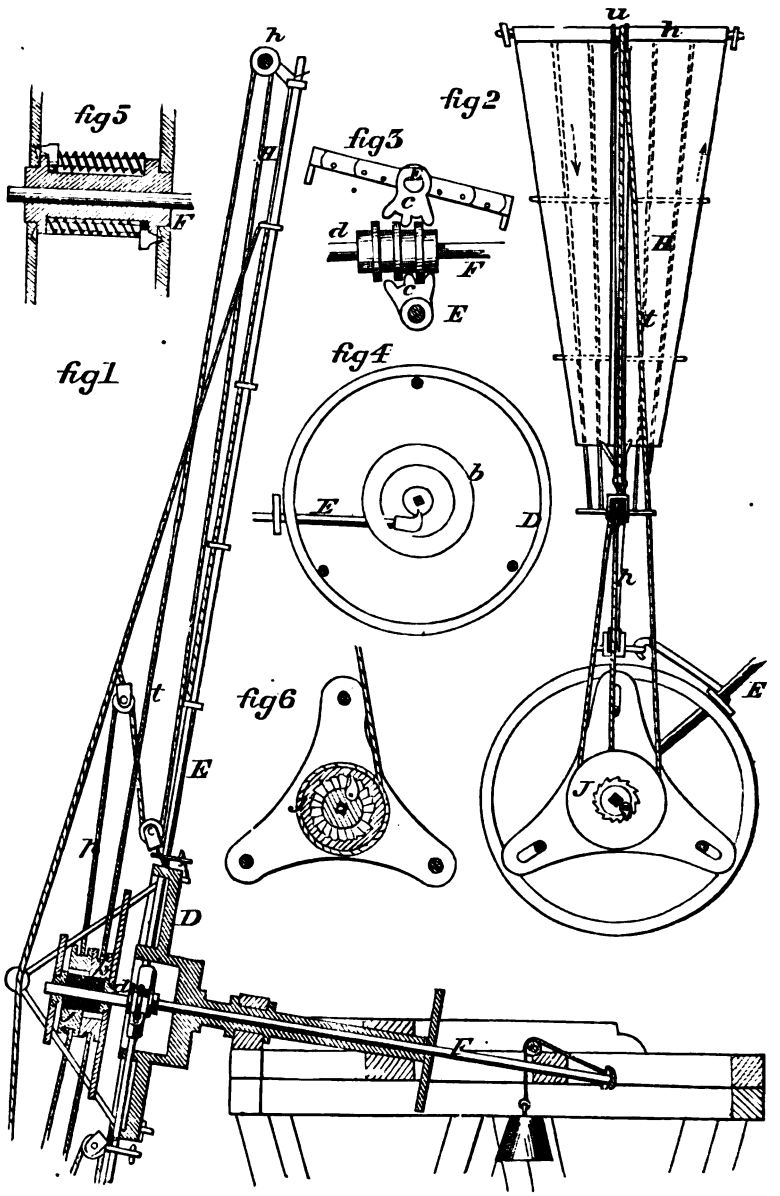

16943

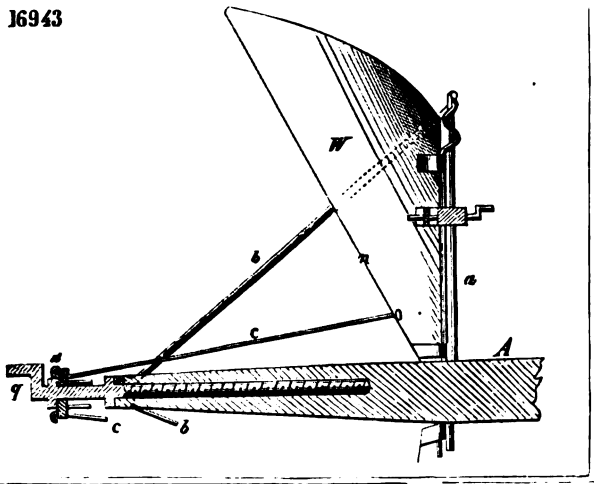

18440

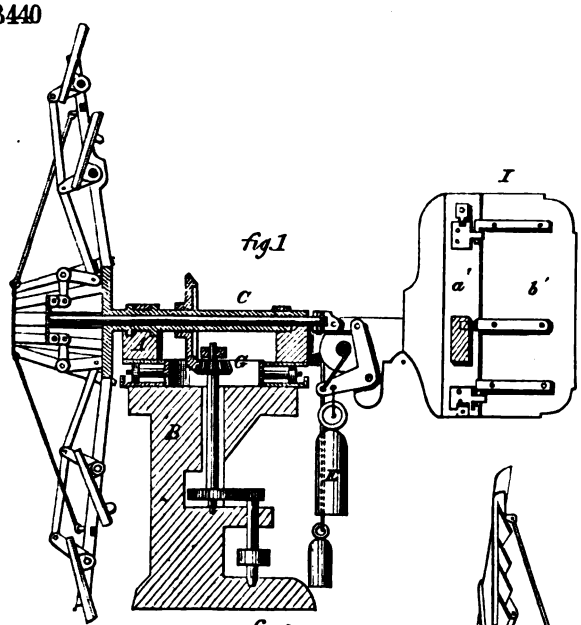

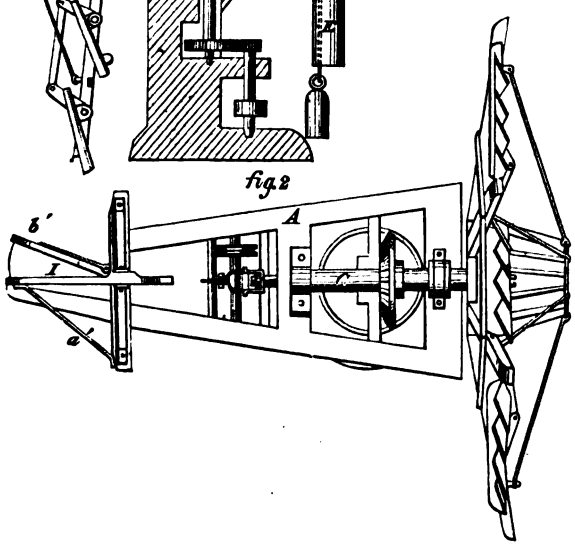

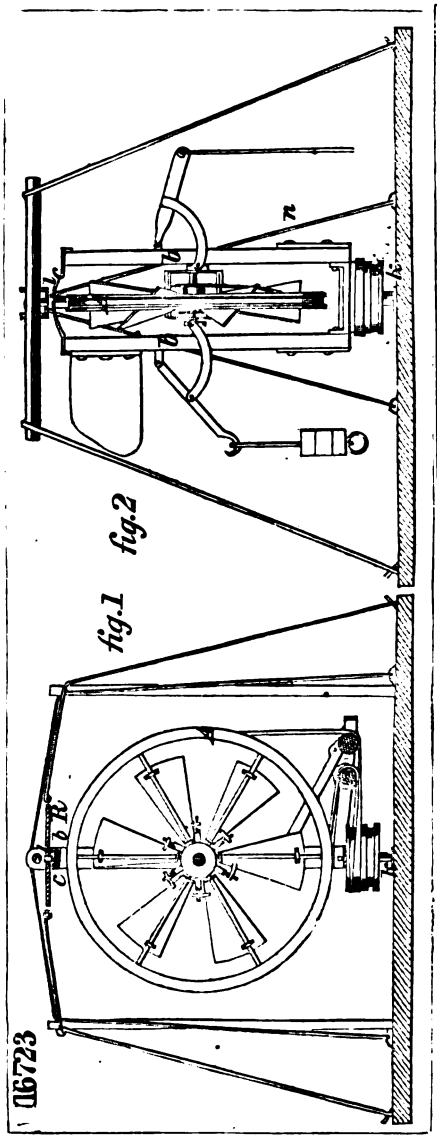
fig.1
fig.2
16723

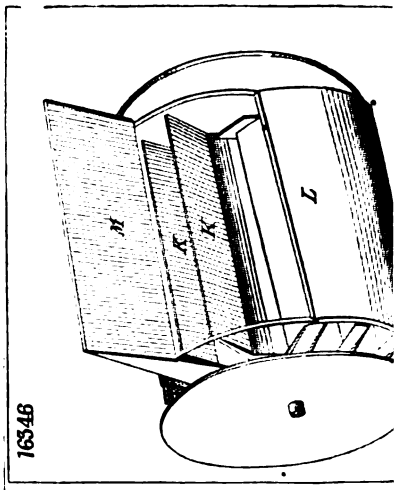
16346

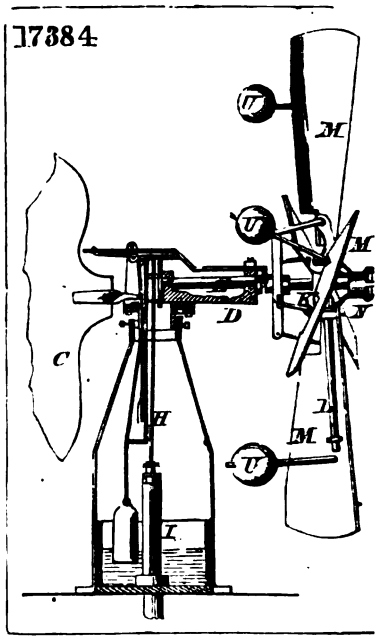
17384

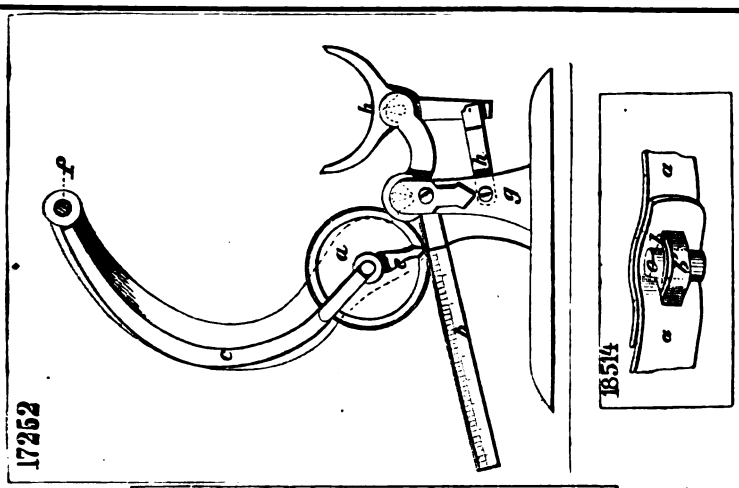
17252

18514

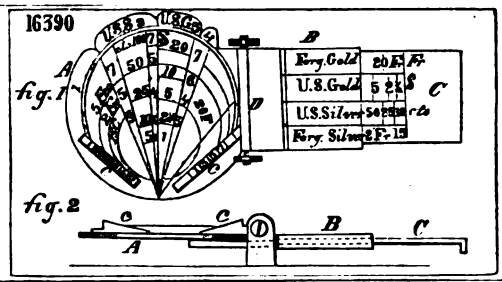
16390
fig. 1
fig. 2
A
B
C
D
Every Gold
U.S. Gold
U.S. Silver
Every Silver

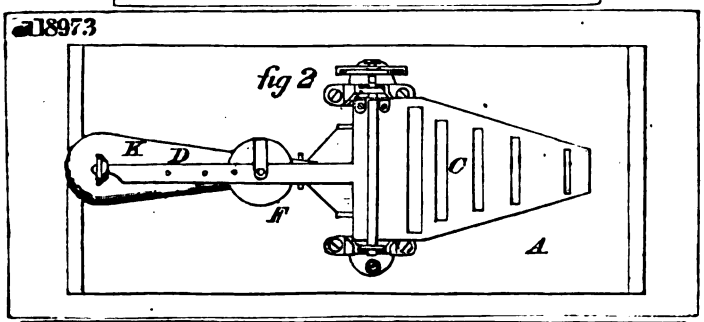
18973
fig 2
K
D
C
F
A

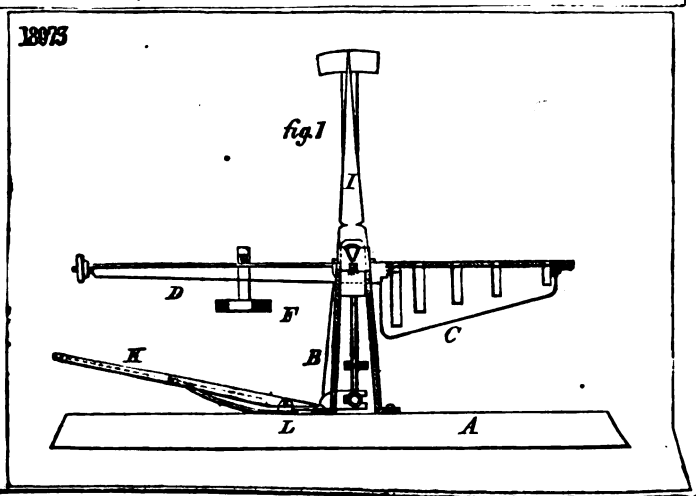
18973
fig. 1
I
D
F
C
K
B
L
A

18299

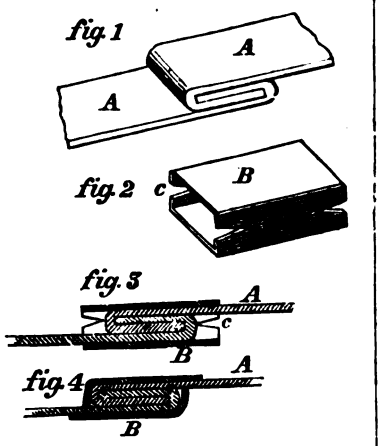

17485

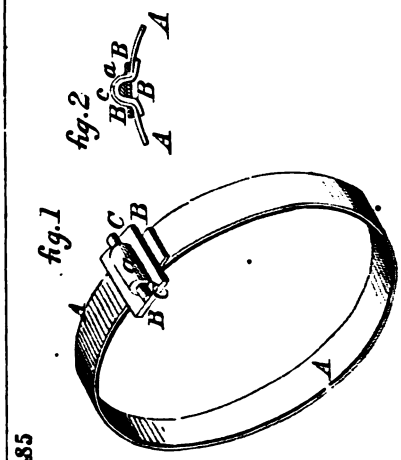

17034

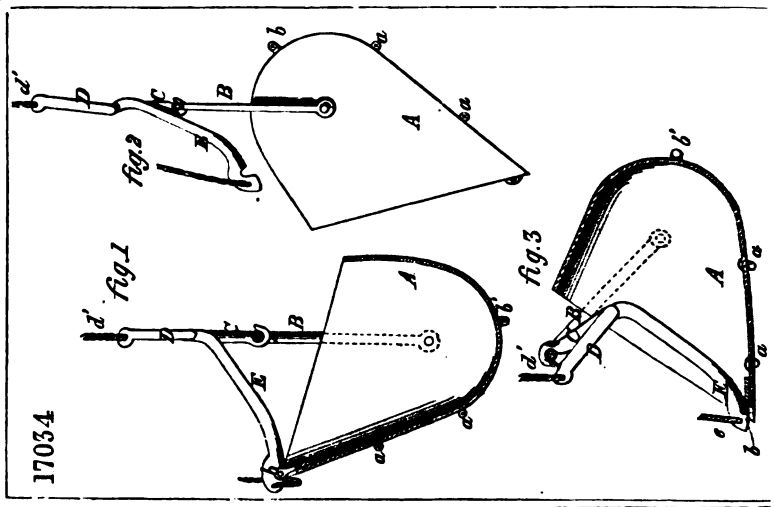

17124

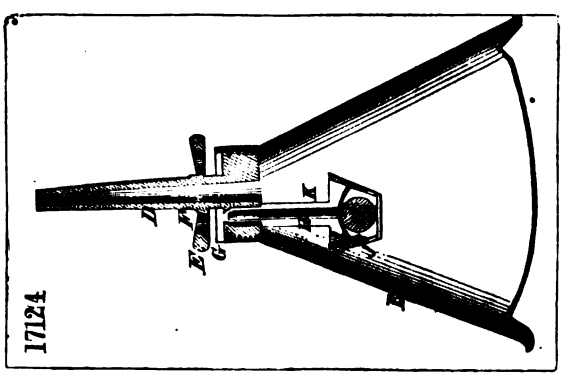

17810

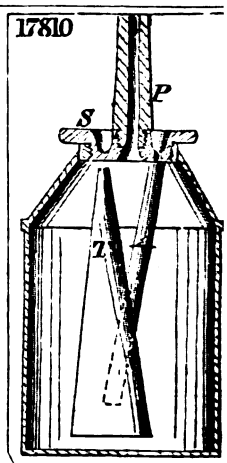

18949

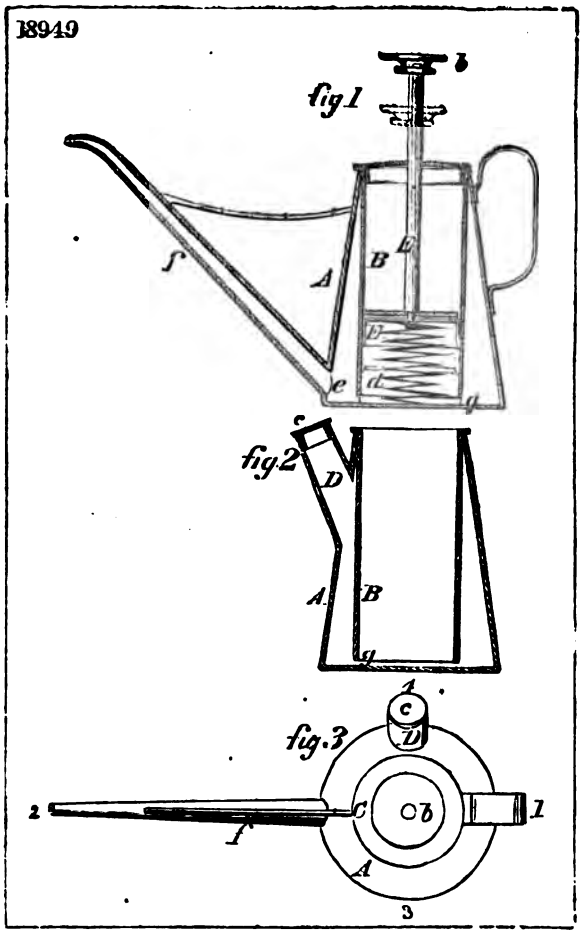

17289

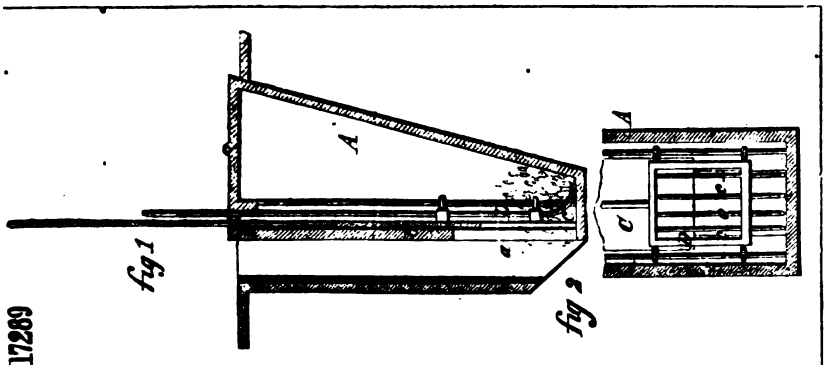

16501

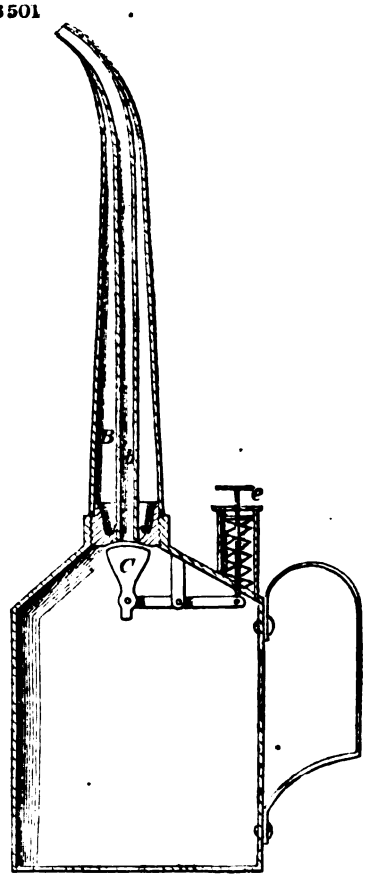

18770

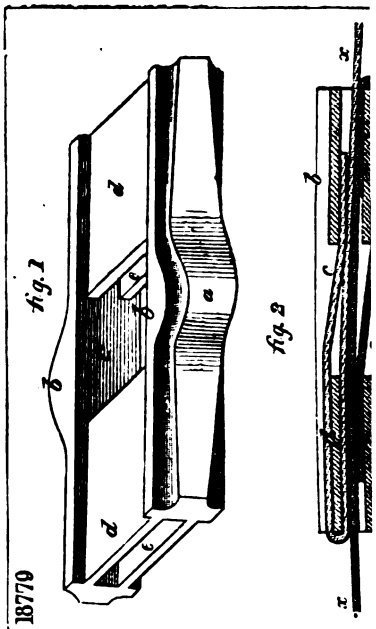

17536

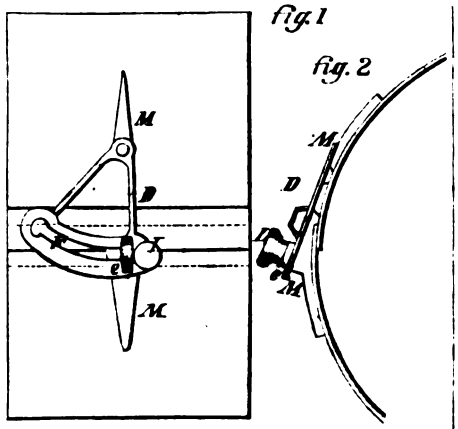

18353

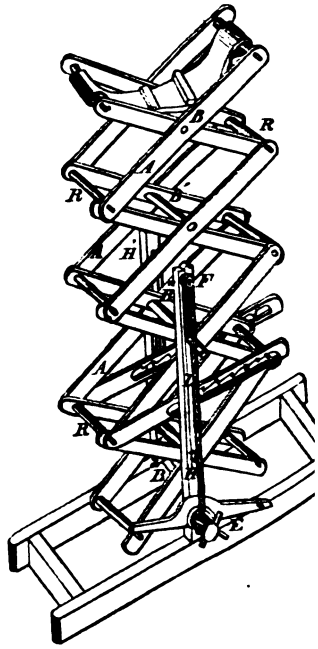

17024

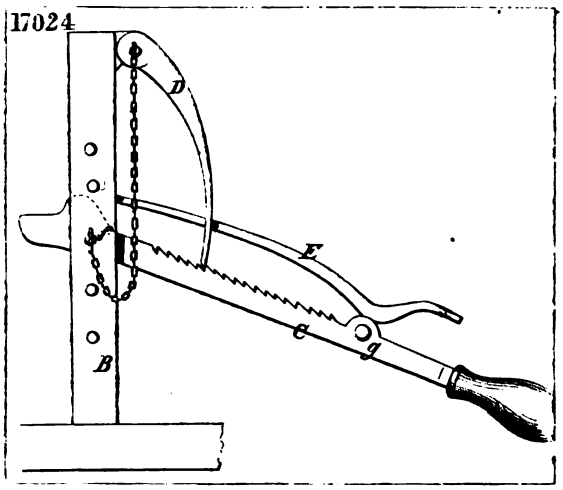

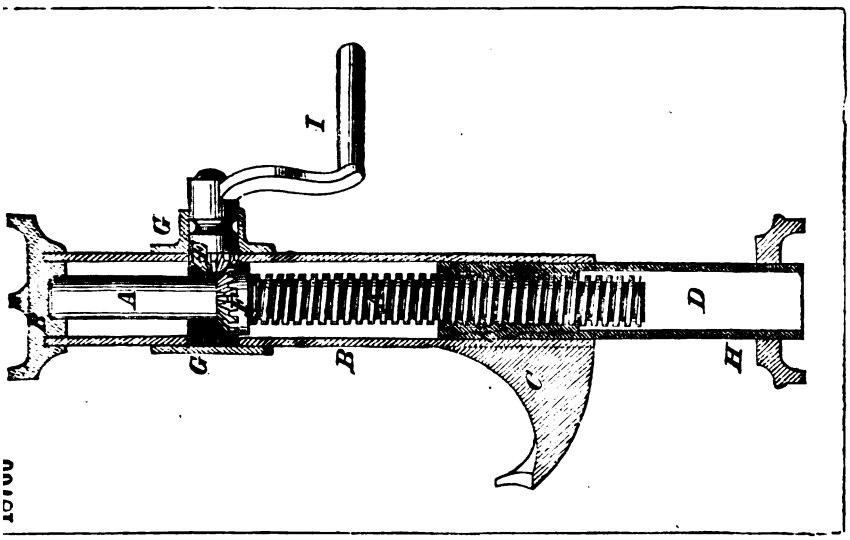

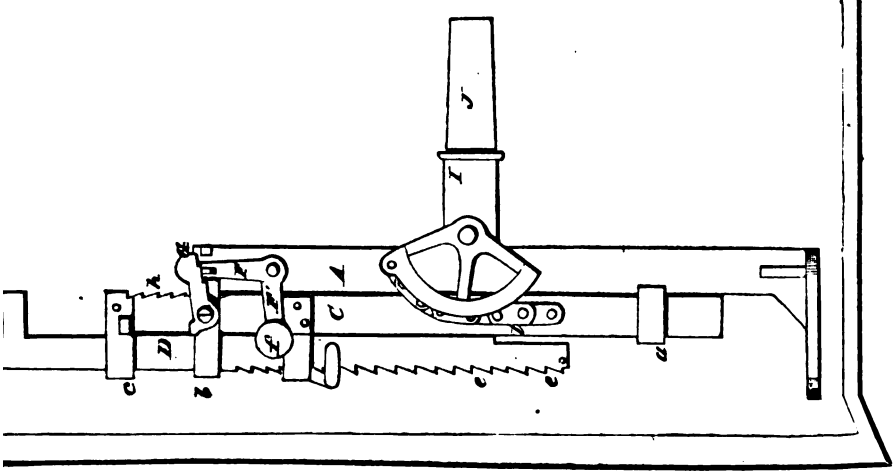

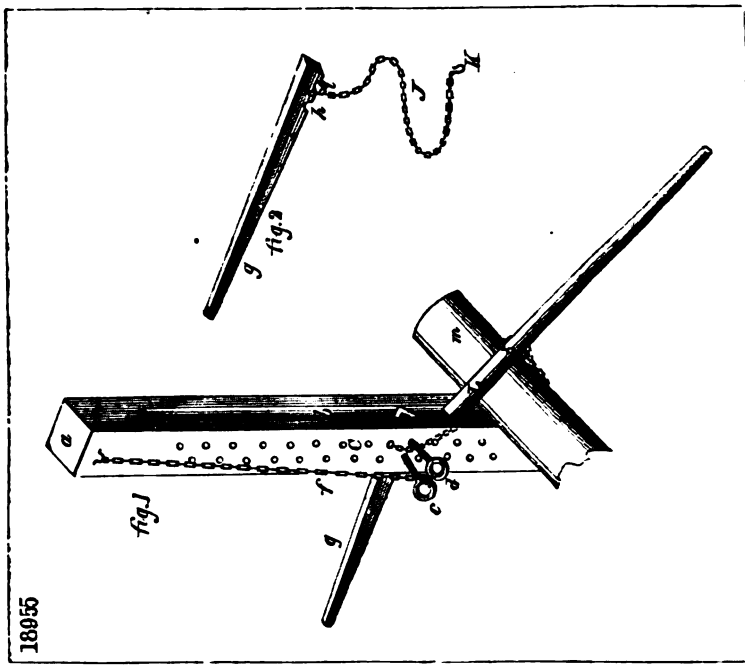
18955
fig.2
fig.1

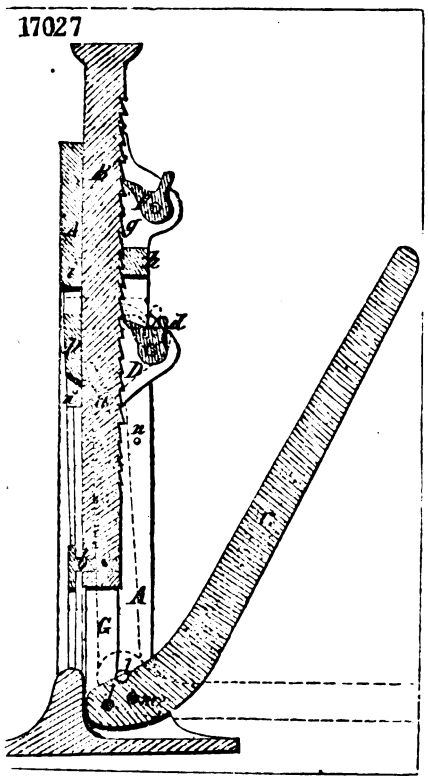
17027

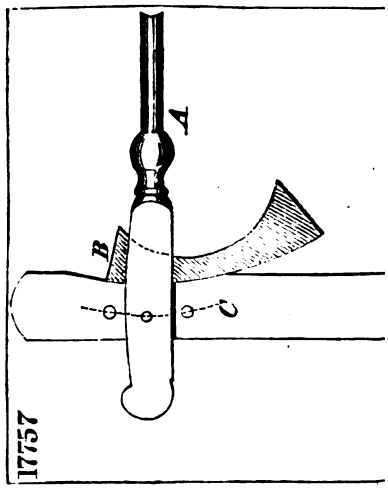
17757
A
B
C

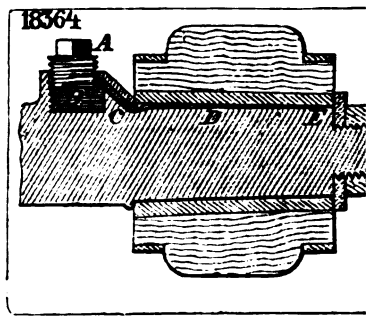
18364
A
C
D
E

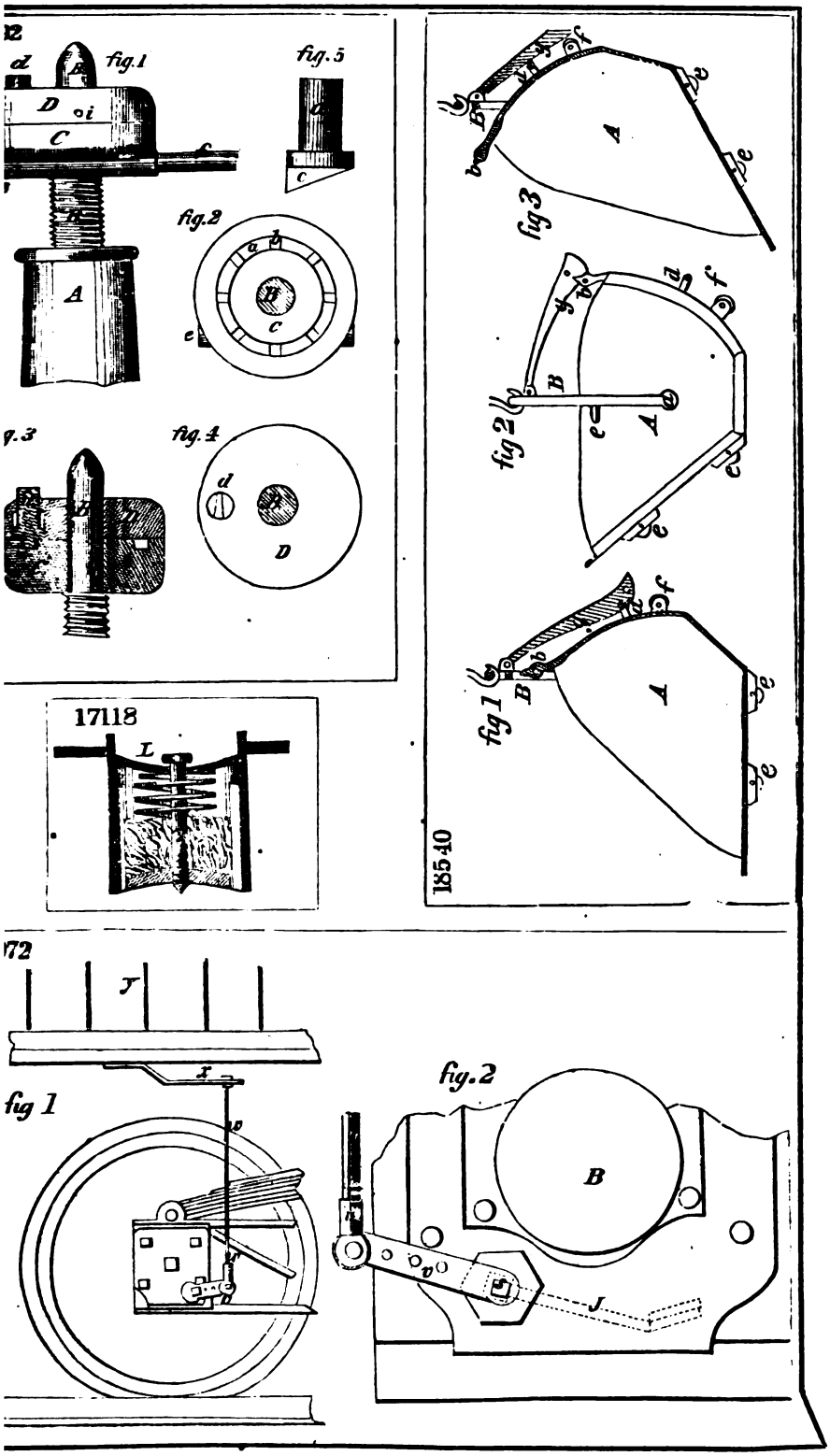
fig.1
fig.5
fig.2
fig.3
fig.4
17118
L
fig 3
fig 2
fig 1
18540
fig 1
fig.2
B
J

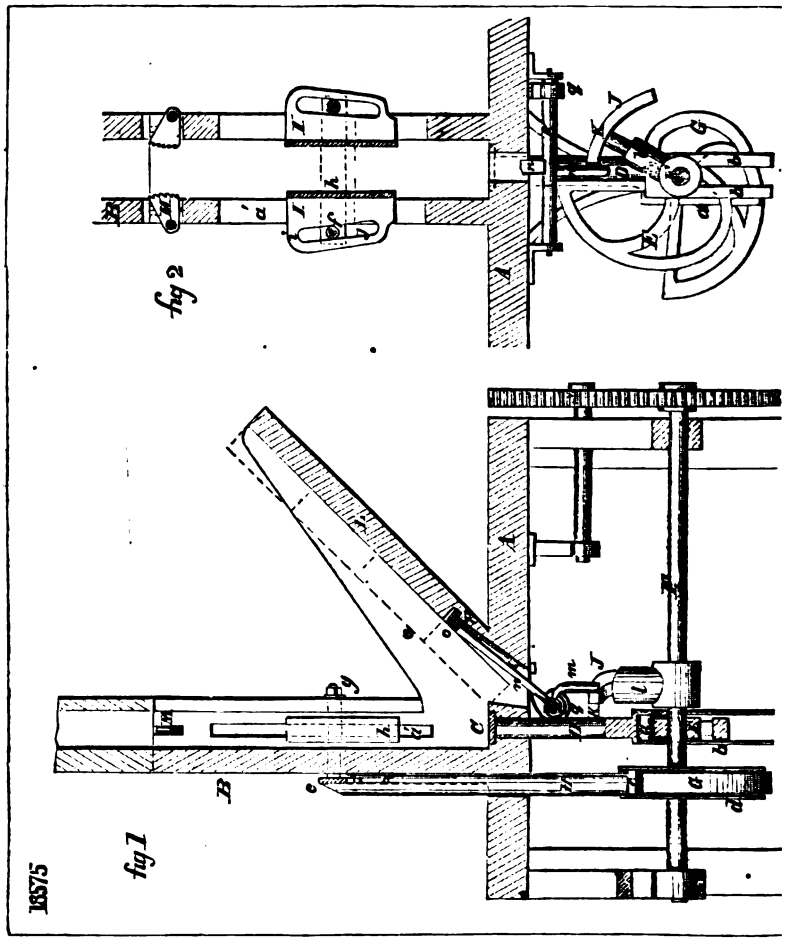

fig 2

fig 1

18575

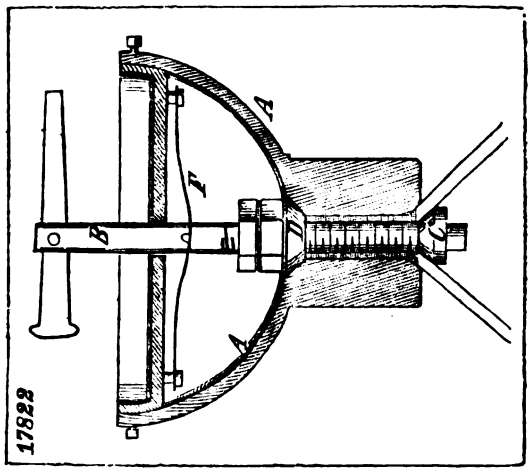

17822

18863

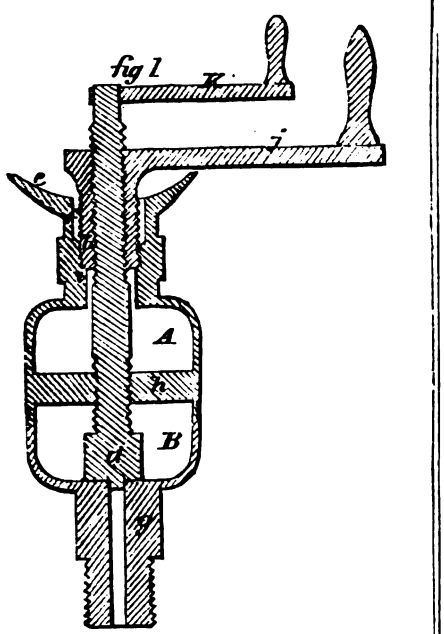

16706

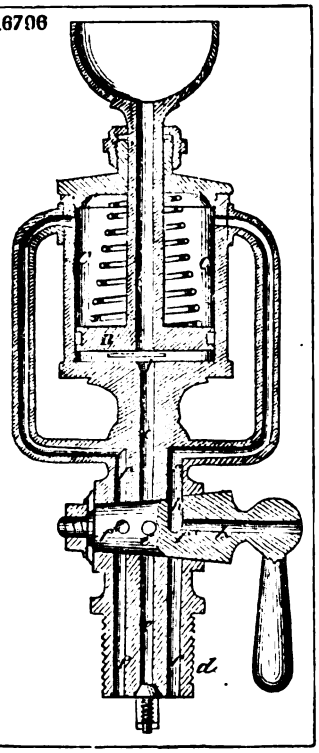

17957

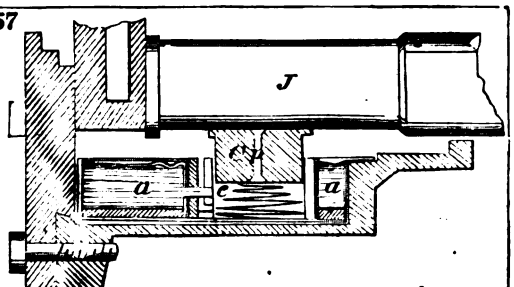

16871

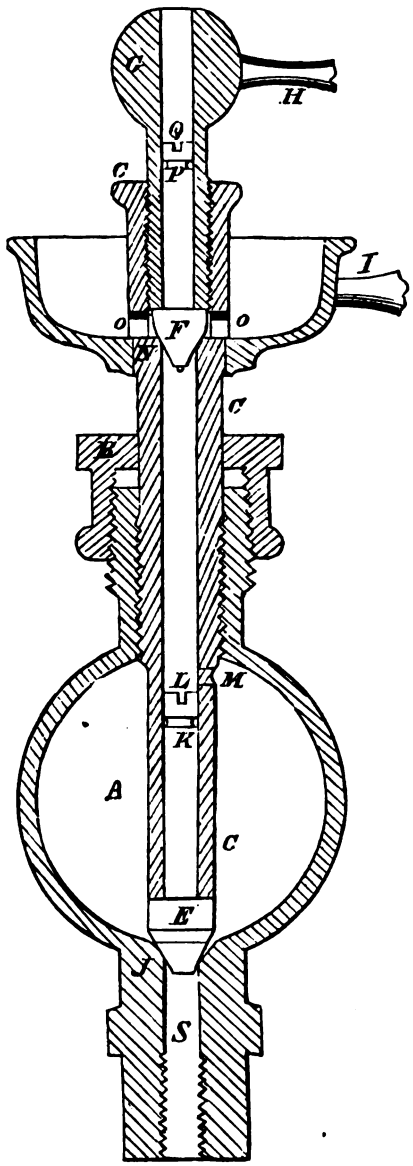

18322

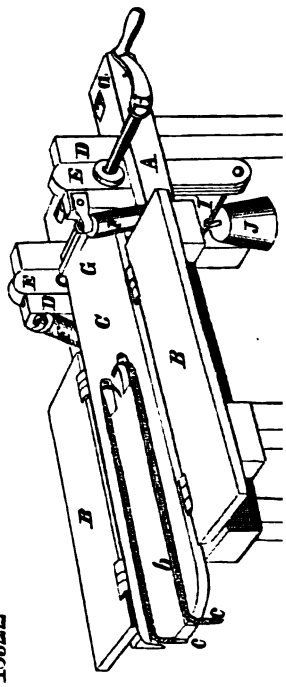

16553

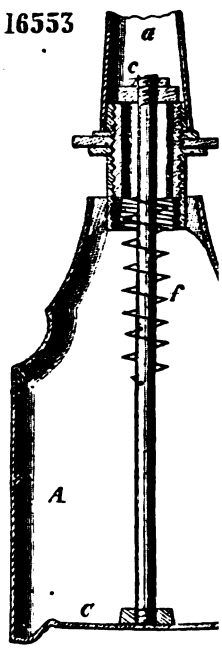

528

Fig. 1

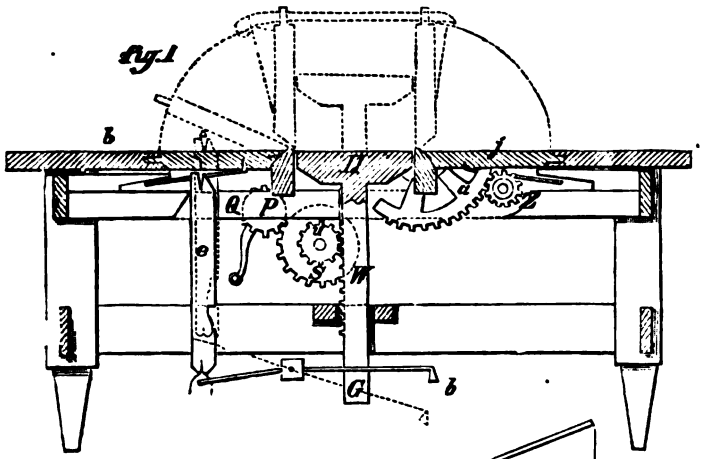

Fig. 2

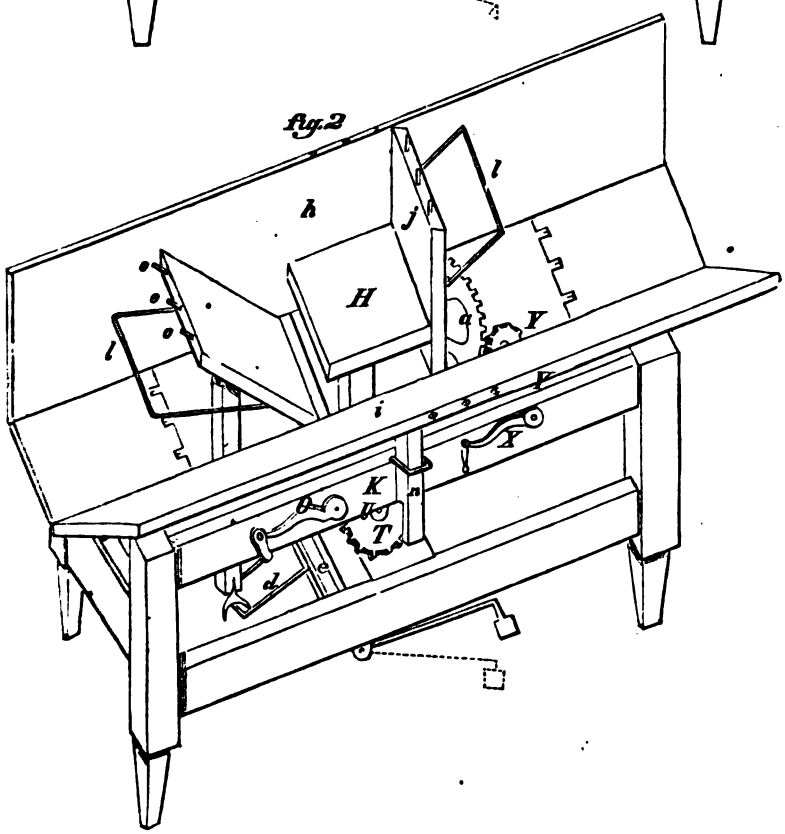

17978

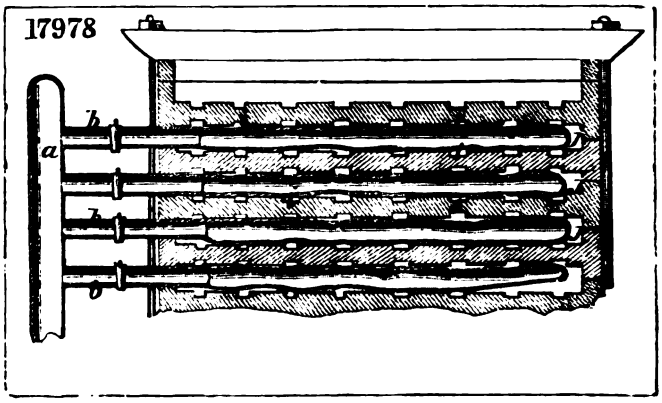

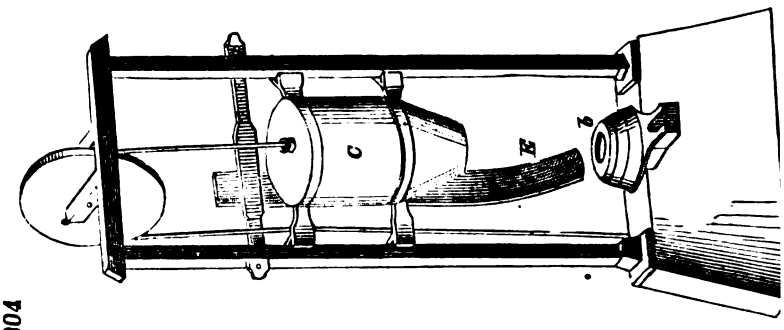

16004

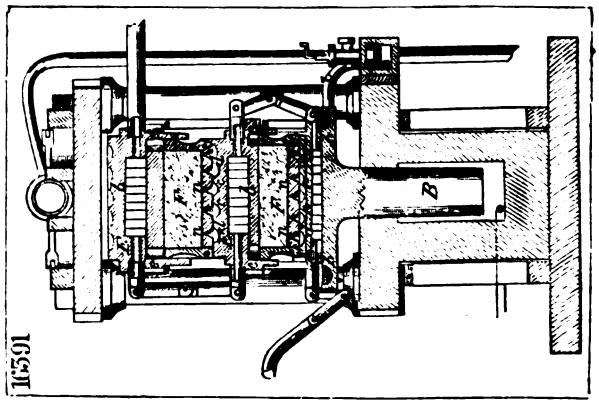

16501

54

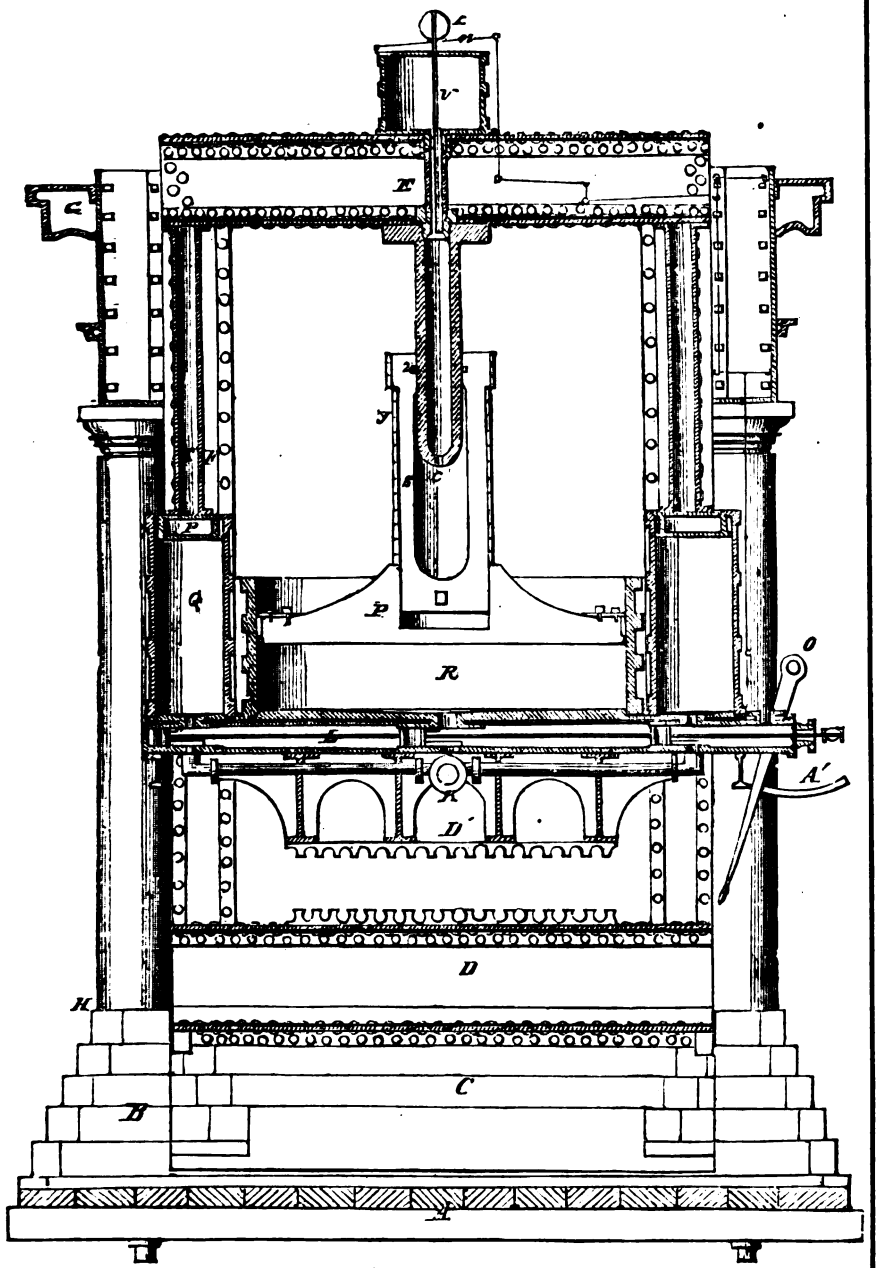

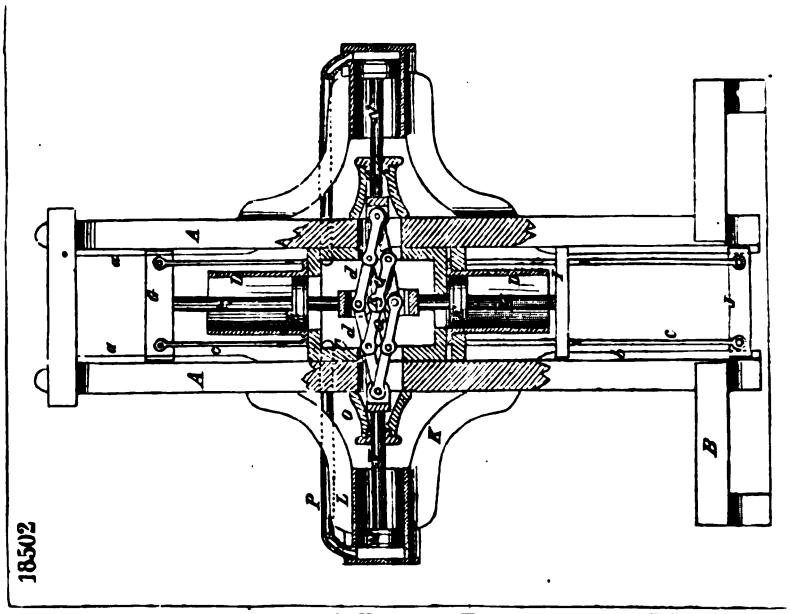

16389

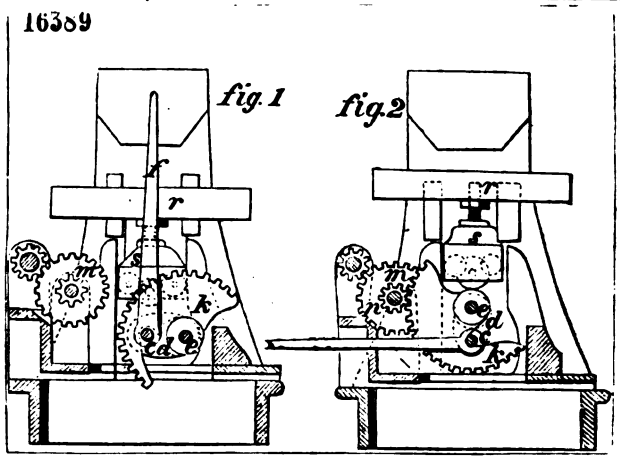

ad18895

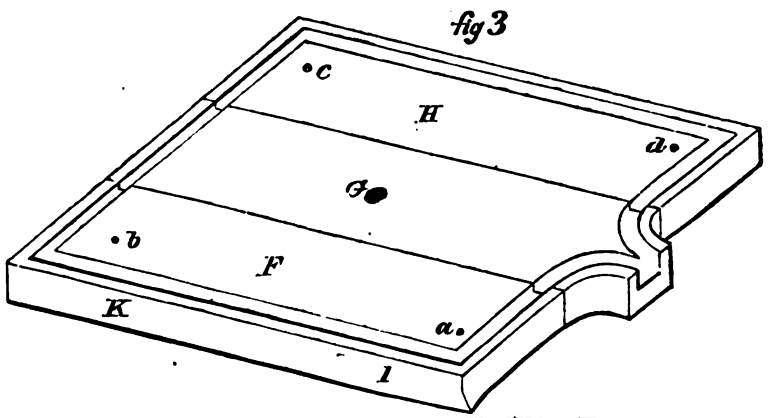

3895

fig.1

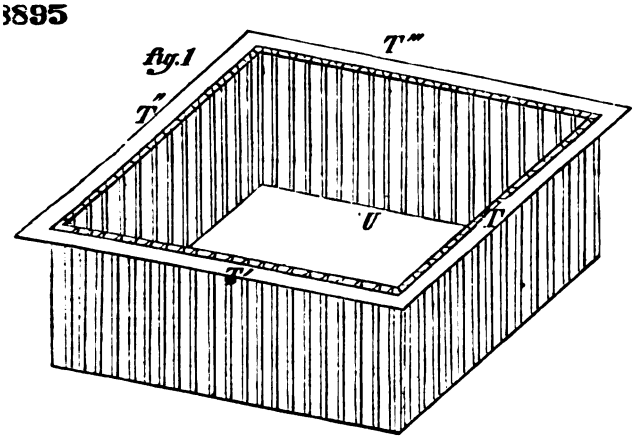

fig.2

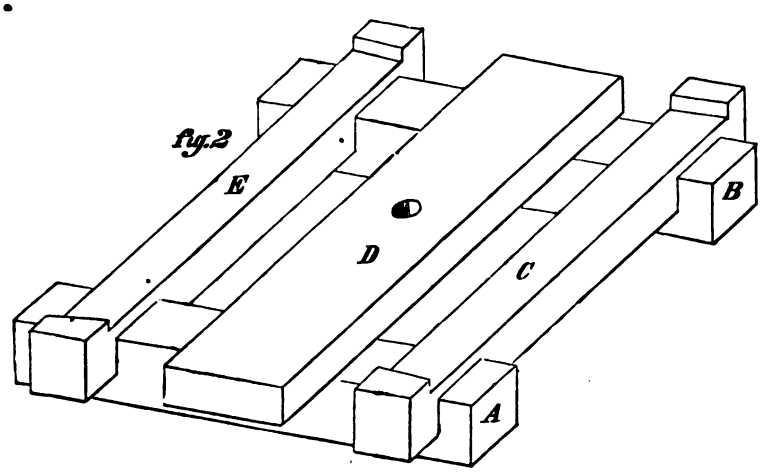

16422

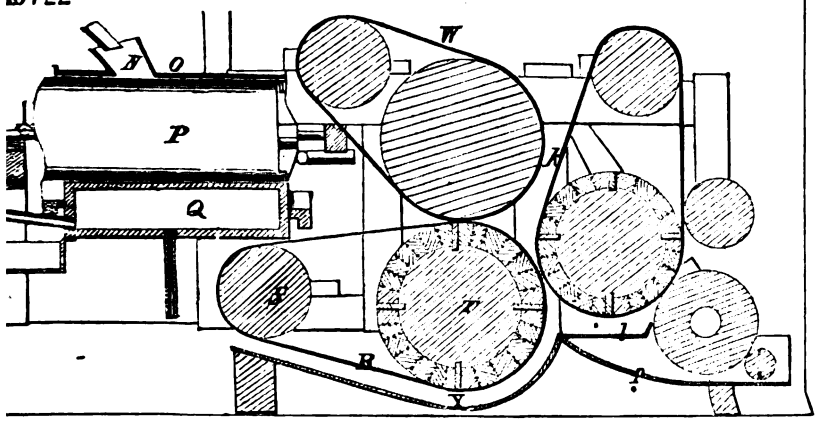

17108

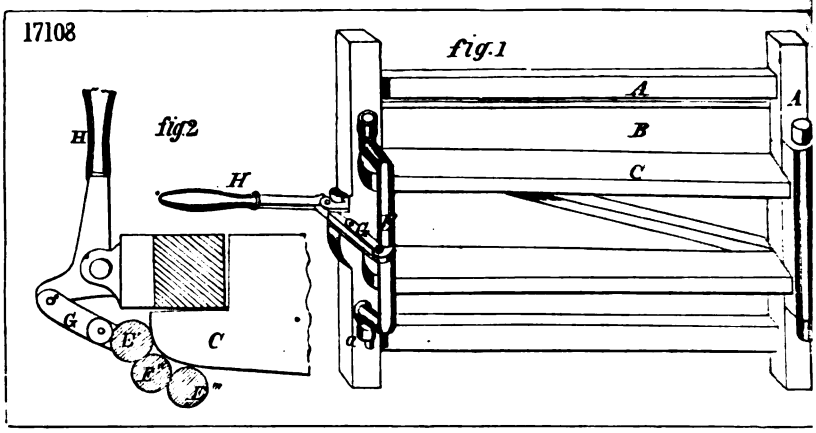

18862

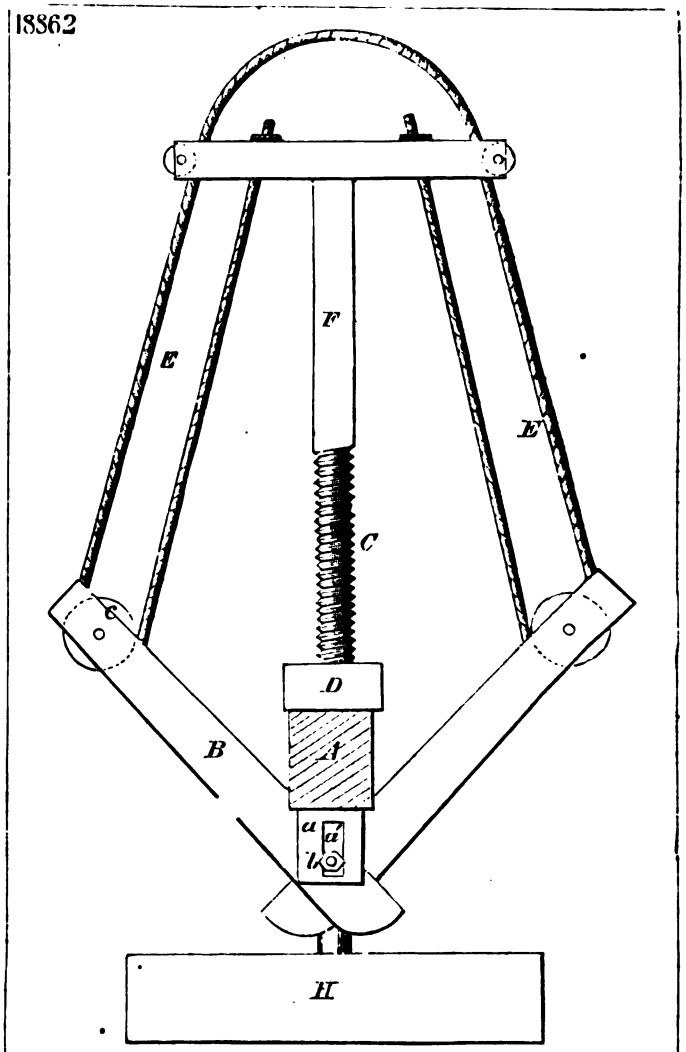

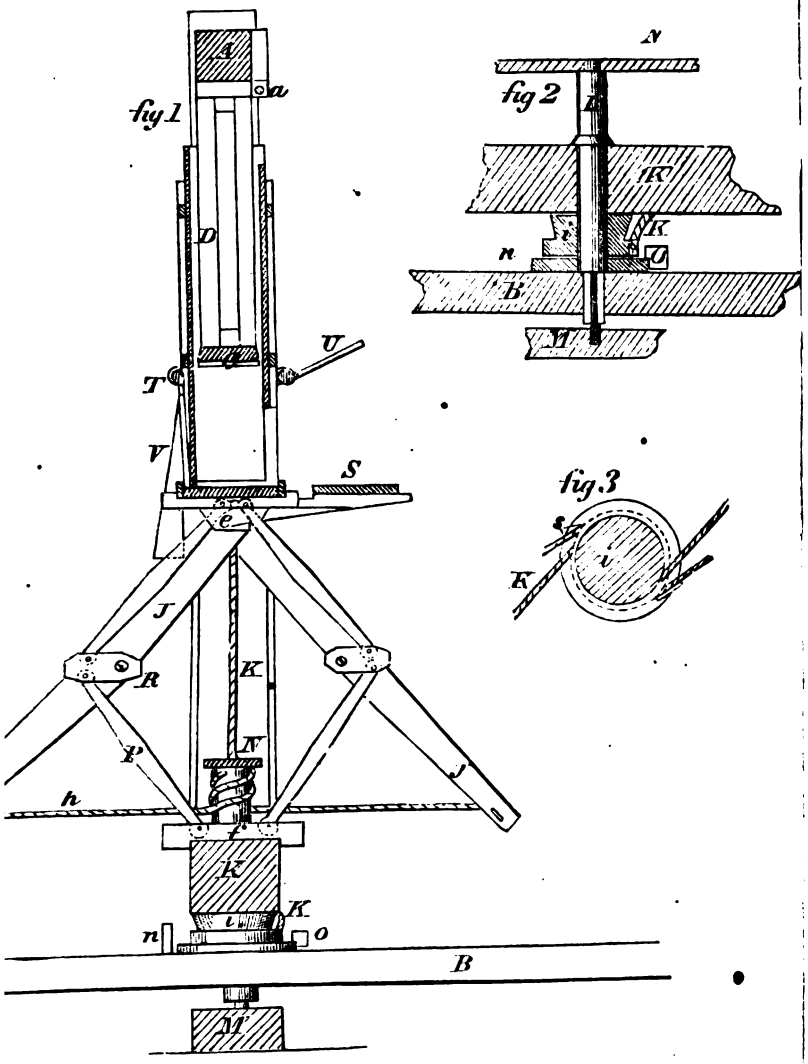
fig 1
fig 2
fig 3
A
a
D
U
T
V
S
e
J
R
K
N
P
h
K
K
n
o
B
M
N
K
K
n
B
M
K

17161

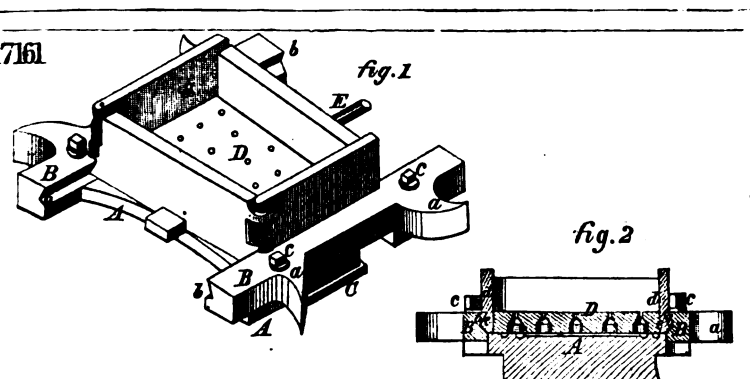
fig. 1
fig. 2
b
E
D
B
A
c
a
c
a
B
b
A
c
D
d
c
B
A
a
C

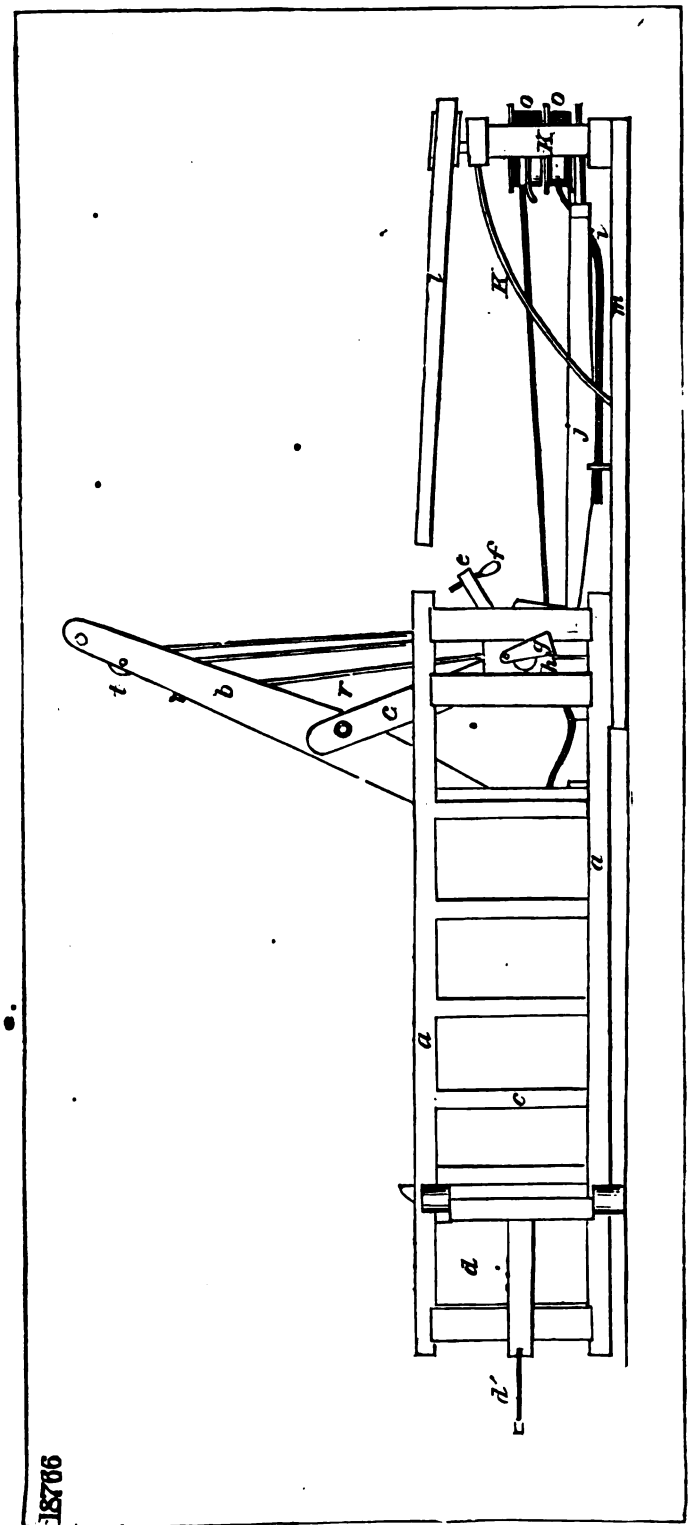
18766

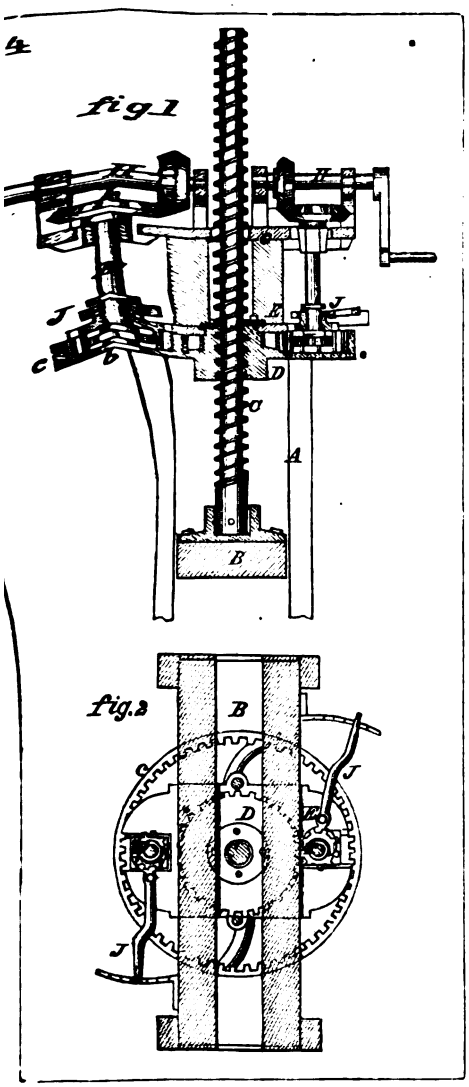
4
fig.1
J
c
b
D
a
A
B
fig.2
B
J
D
J

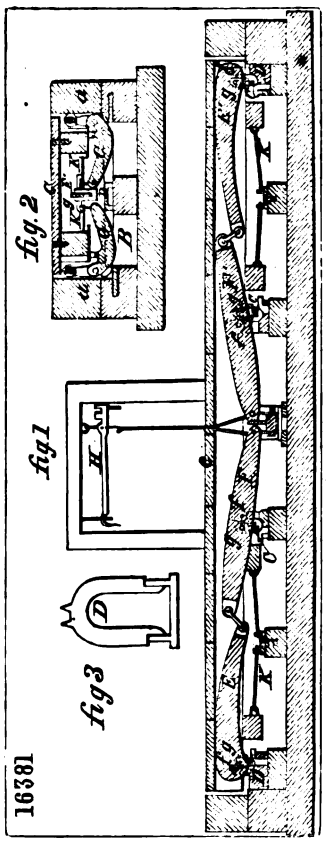
fig.2
fig.1
fig3
16381

ad18854

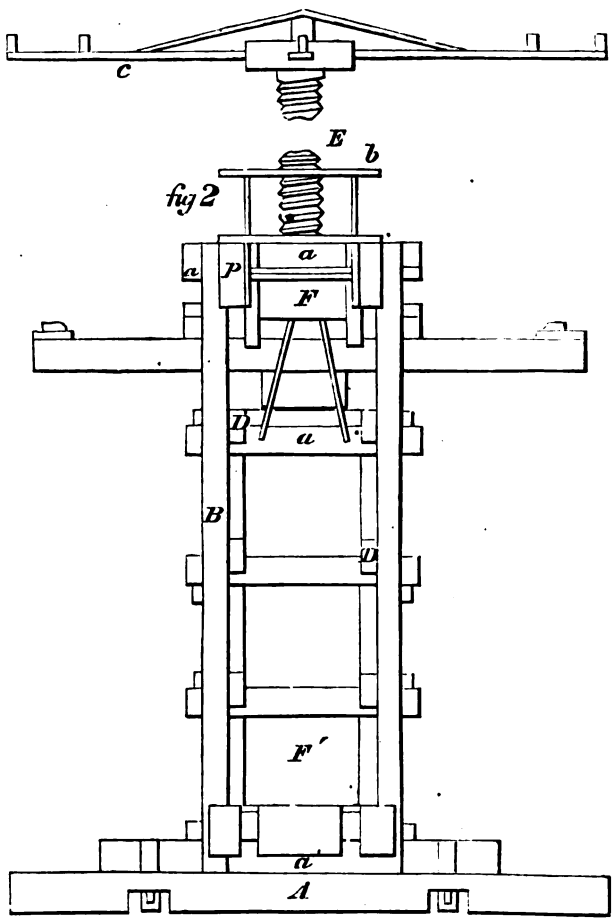

17278

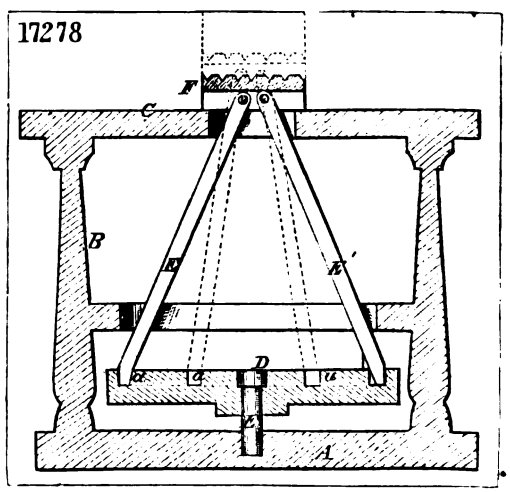

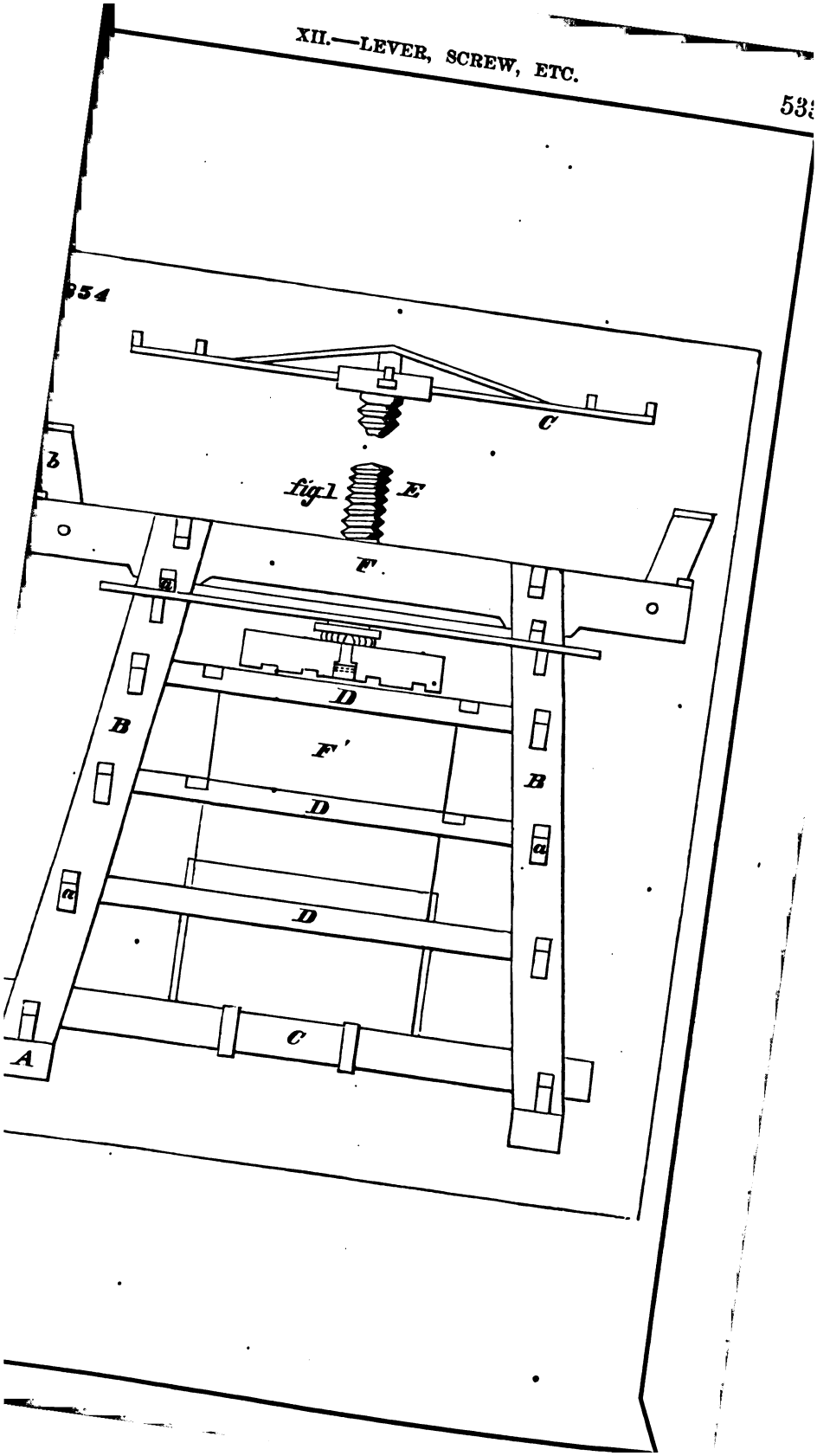
954
C
b
fig 1
E
F
a
D
B
F'
D
B
a
a
D
C
A

17230

fig 1

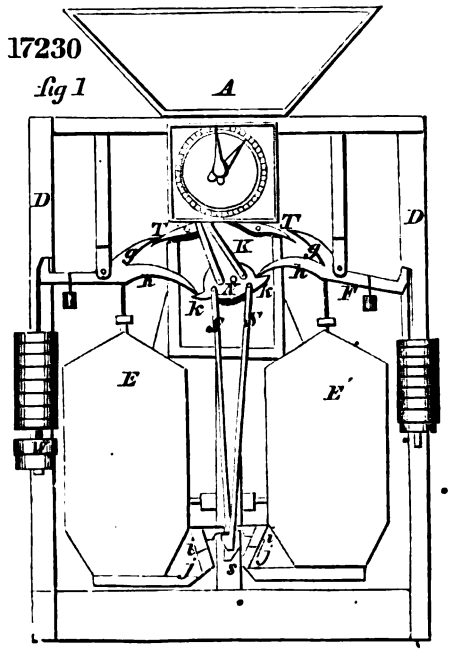

fig 2

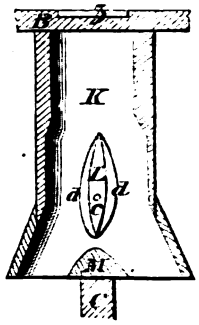

17053

fig 1

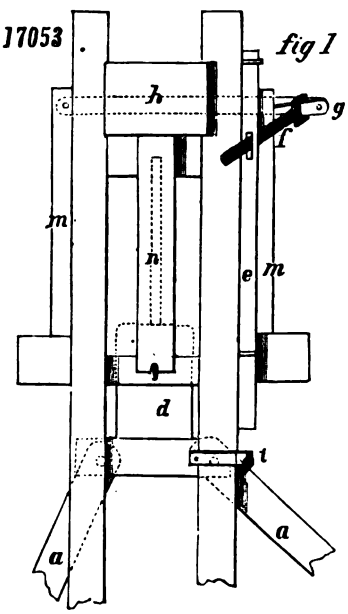

fig 2

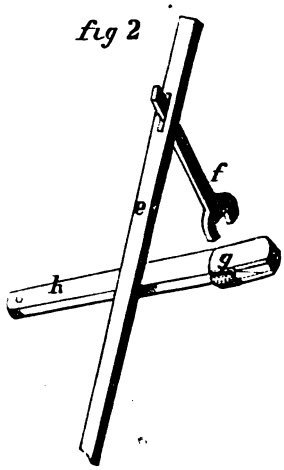

17411

fig 1

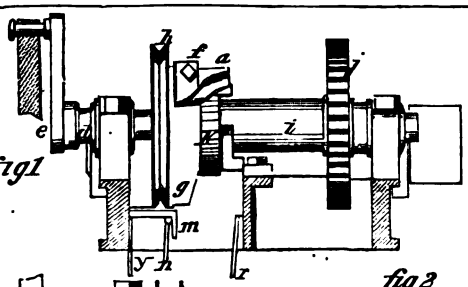

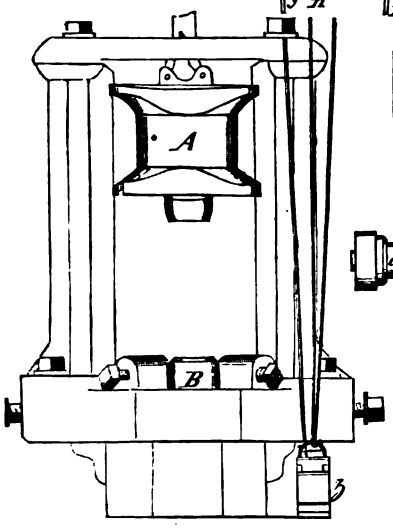

fig 2

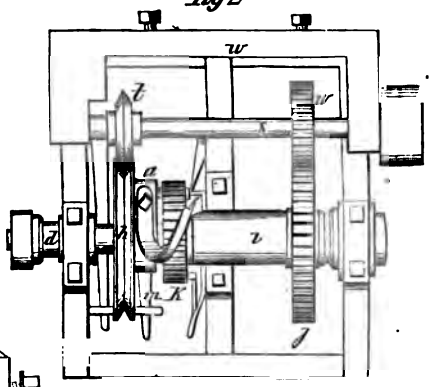

fig 4

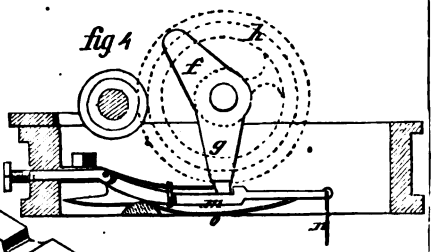

fig 3

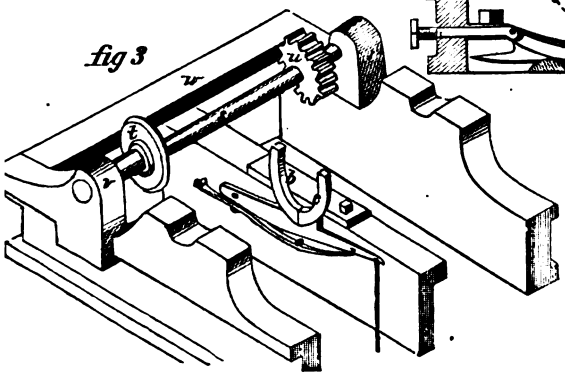

18367

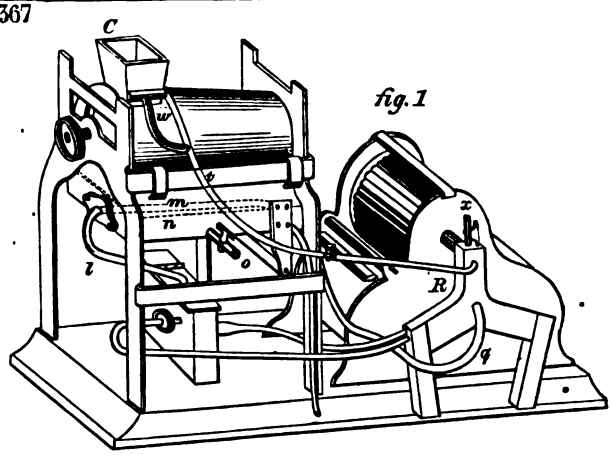

fig. 1

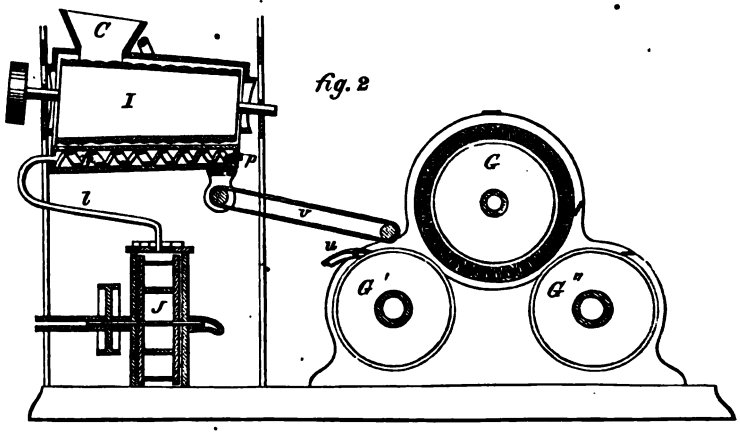

fig. 2

17126

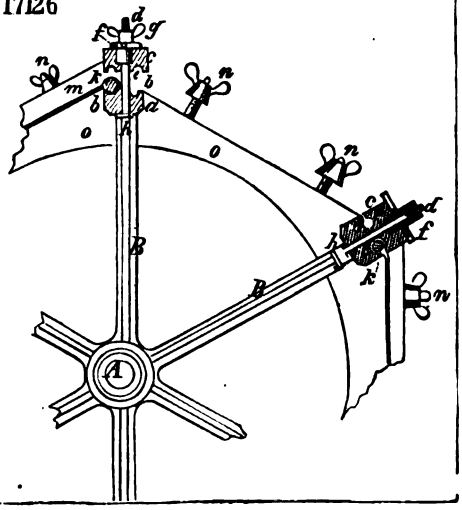

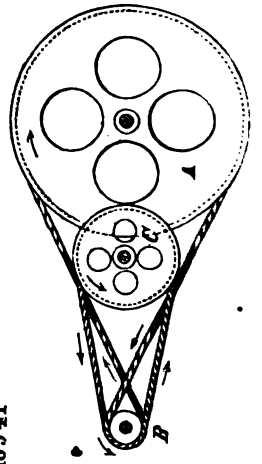

18941

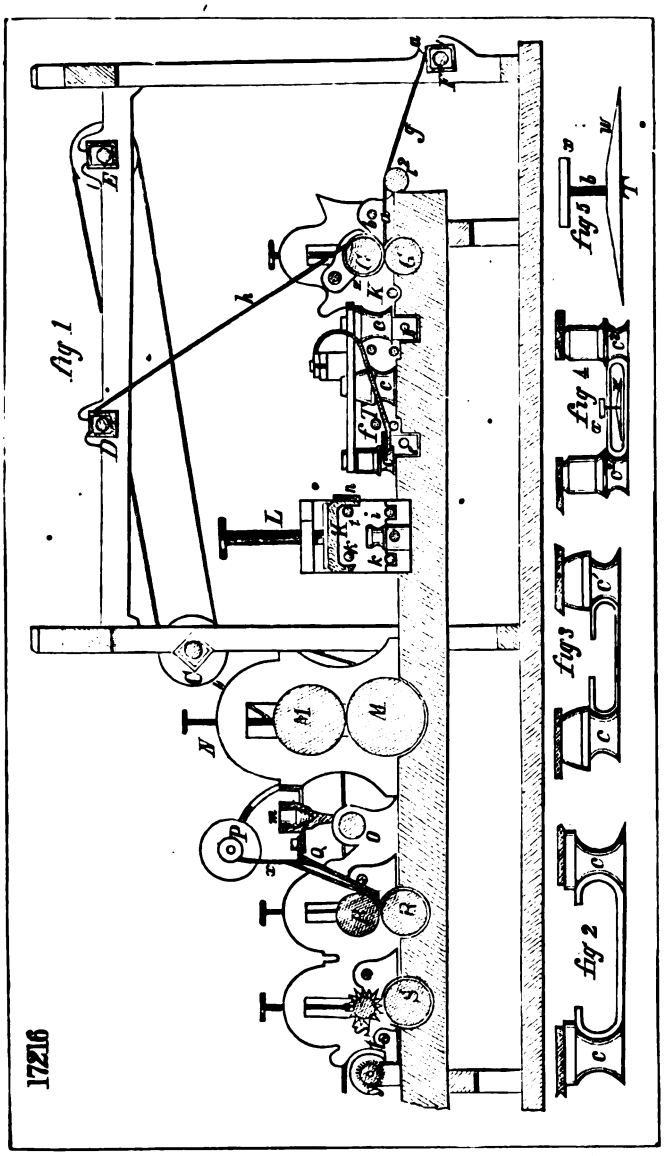
17216
fig 1
fig 2
fig 3
fig 4
fig 5

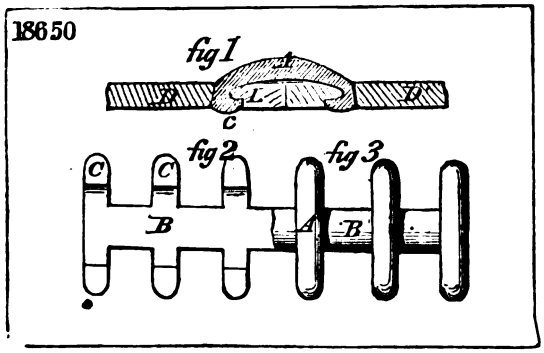
18650
fig 1
fig 2
fig 3
A
B
C

17743

fig. 1

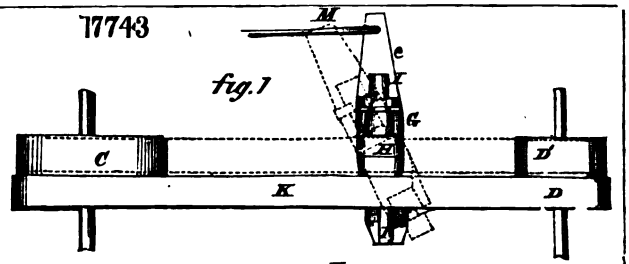

fig. 2

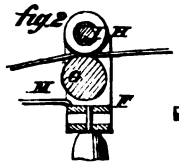

fig. 3

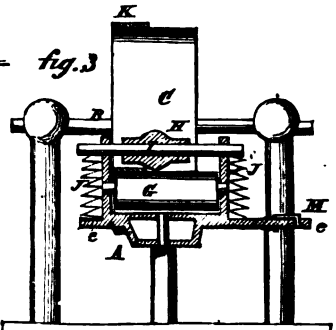

18920

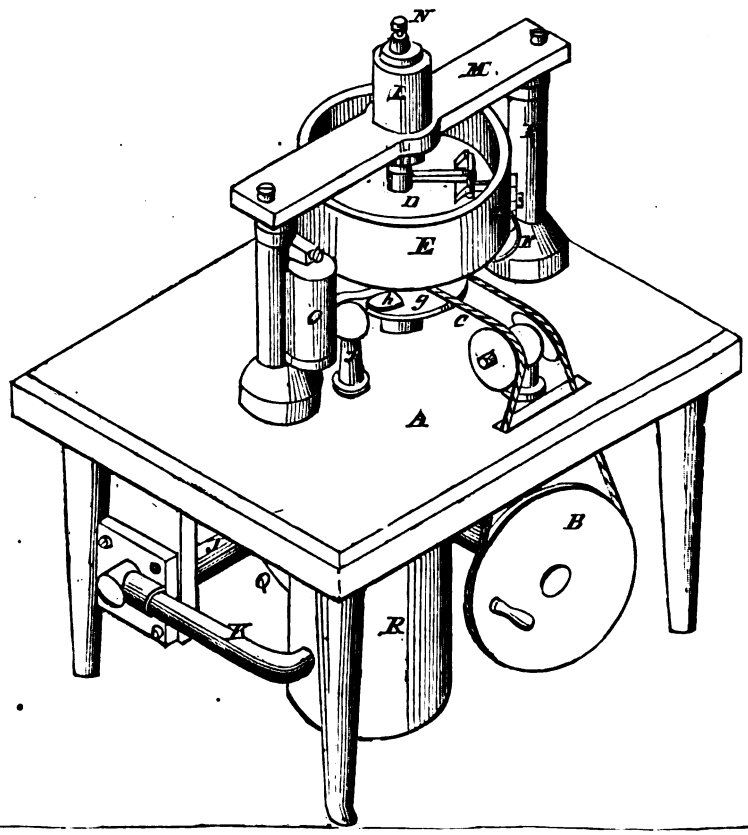

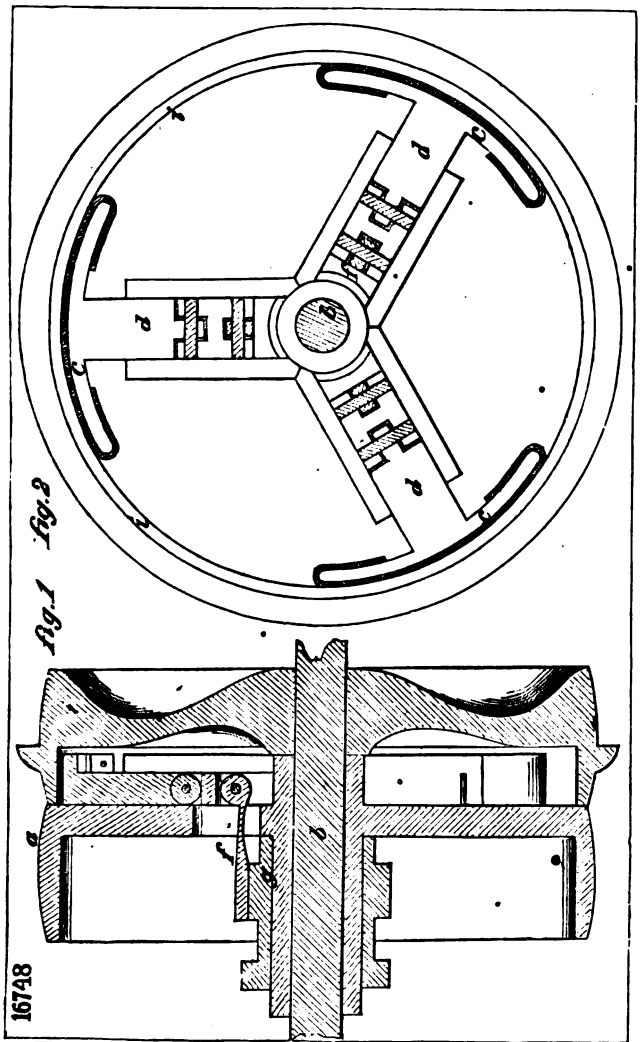
Fig. 2
Fig. 1
16748

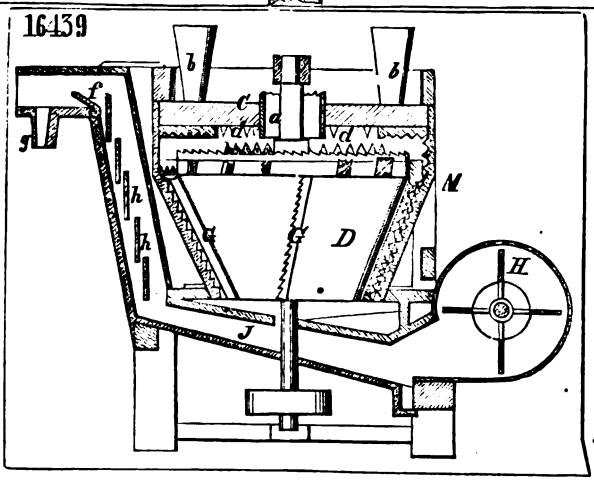
16439

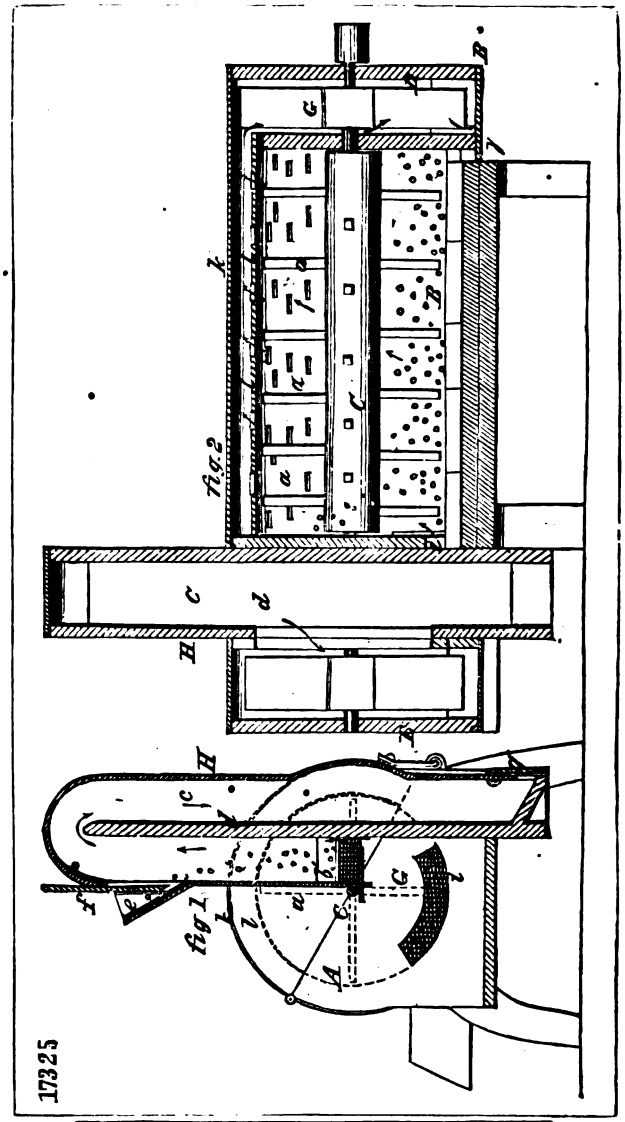
17325
Fig 1
Fig 2

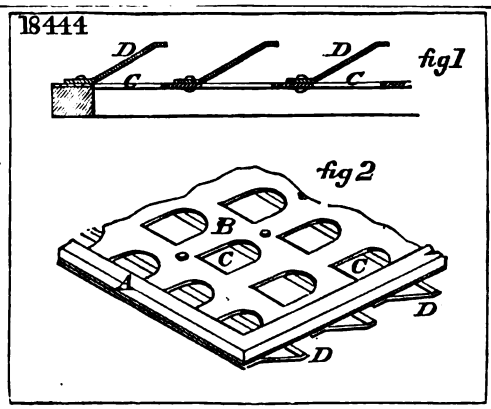
18444
fig 1
fig 2

17363

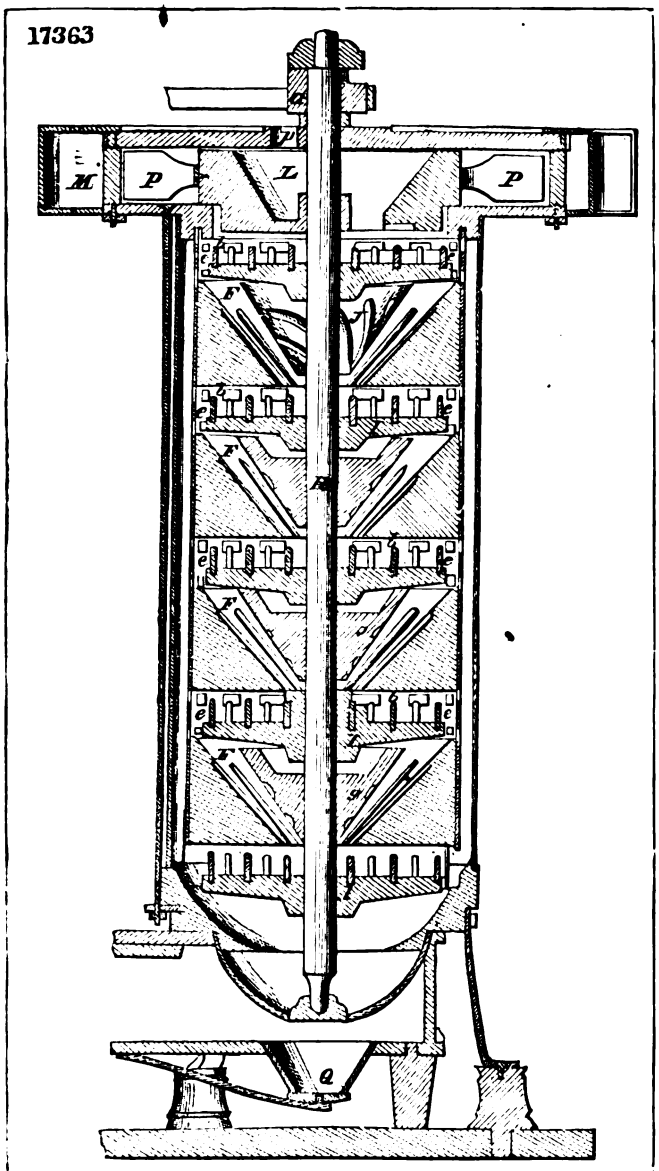

16471

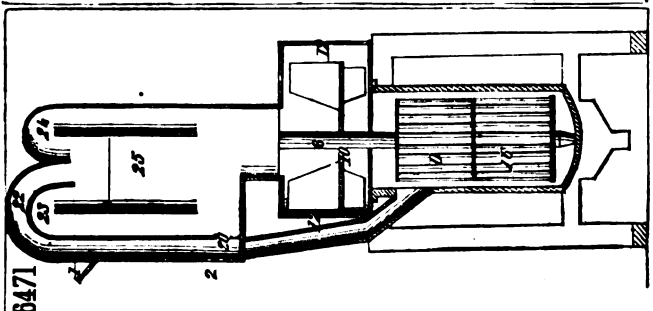

17498

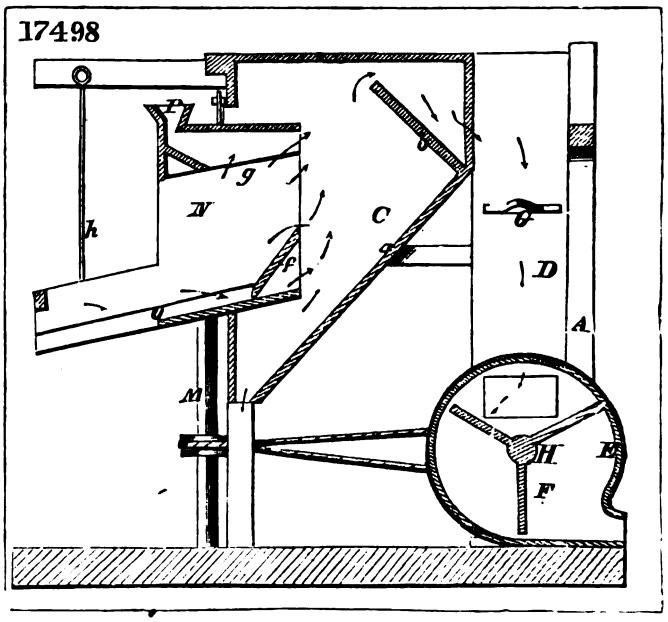

17853

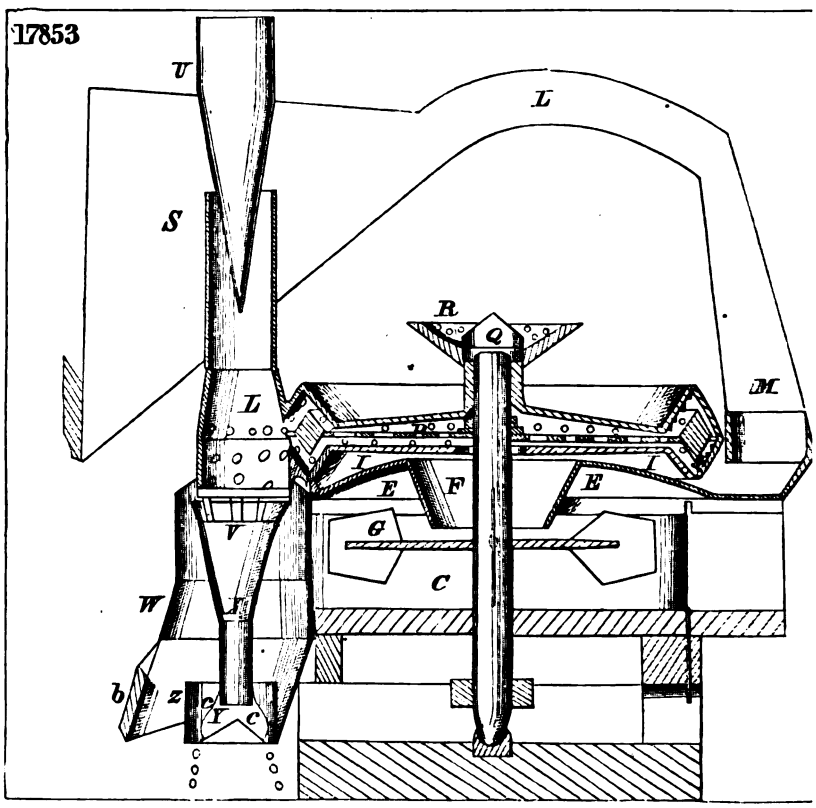

17728

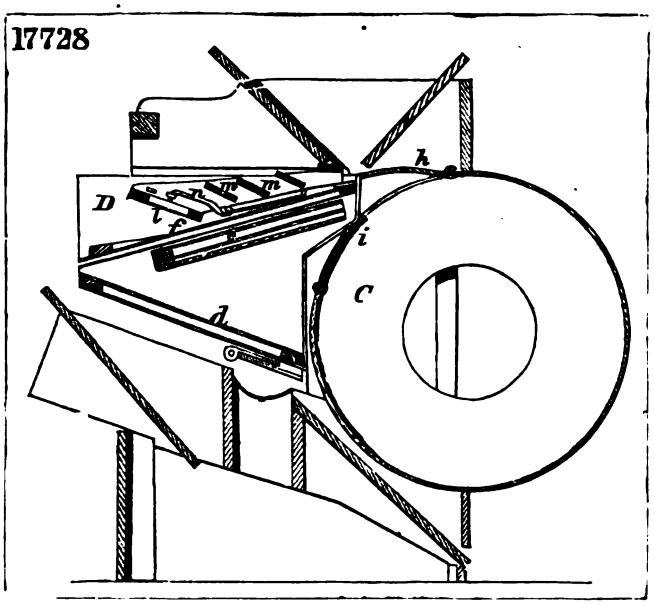

ad 18761

fig. 3

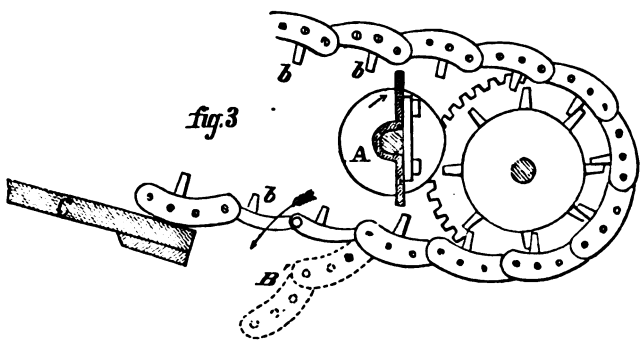

fig. 2

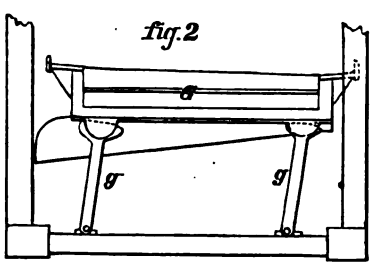

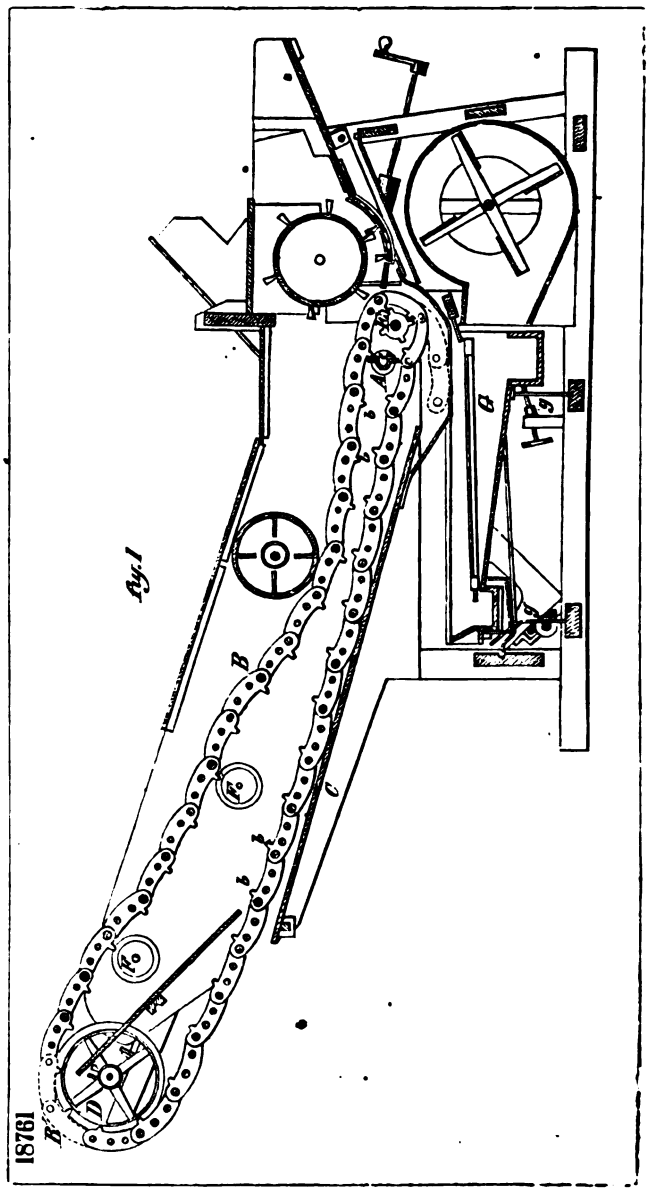
Fig. 1
B
C
18761

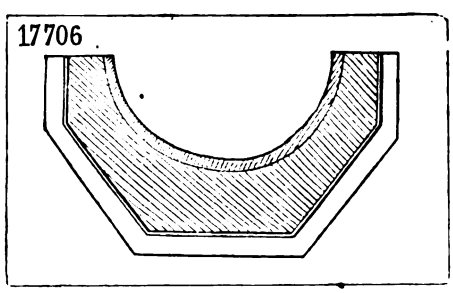
17706

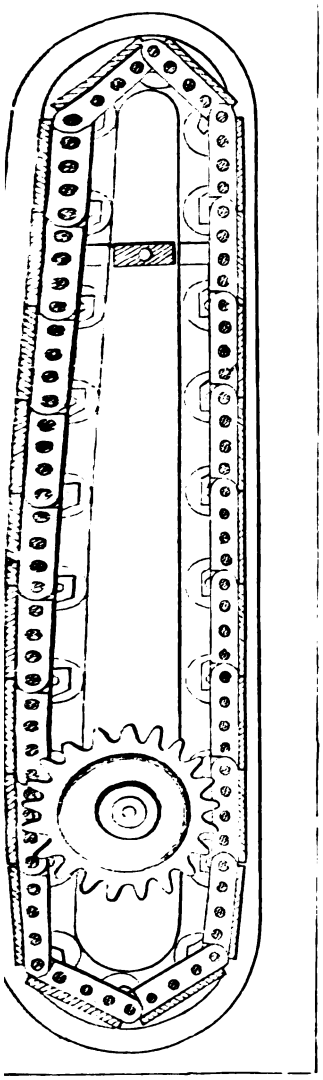

17966

fig.1

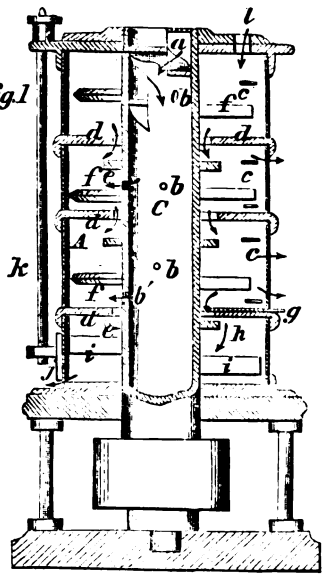

fig.2

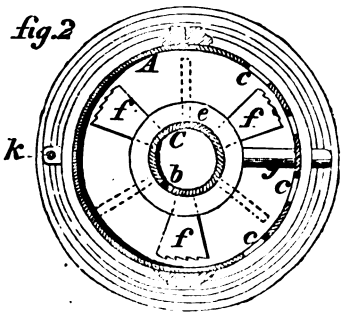

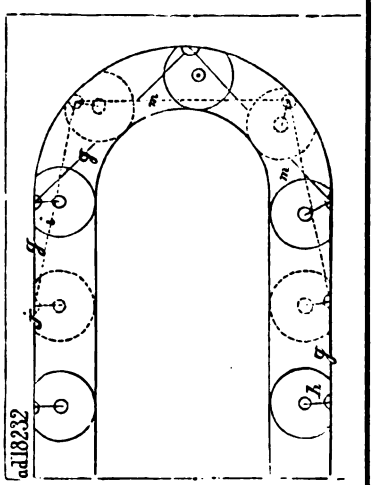

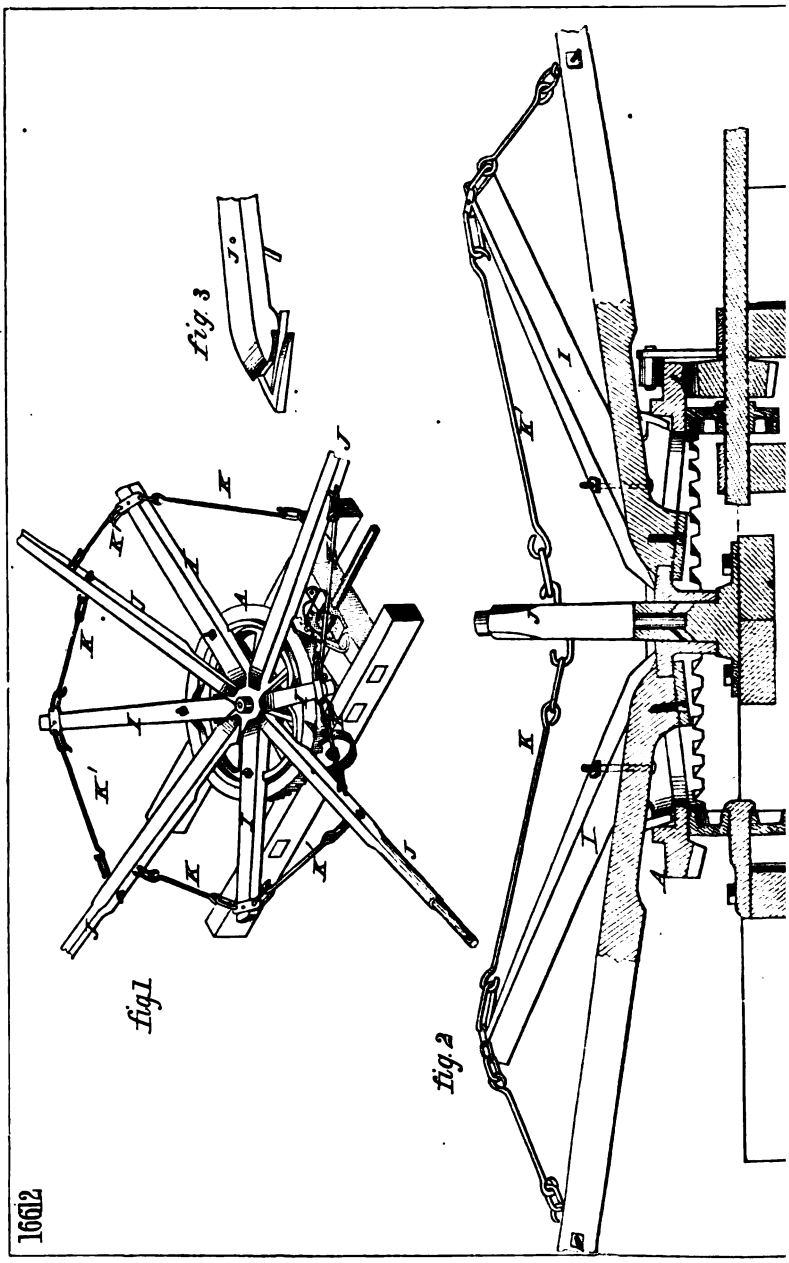
16612
fig 3
fig 1
fig 2

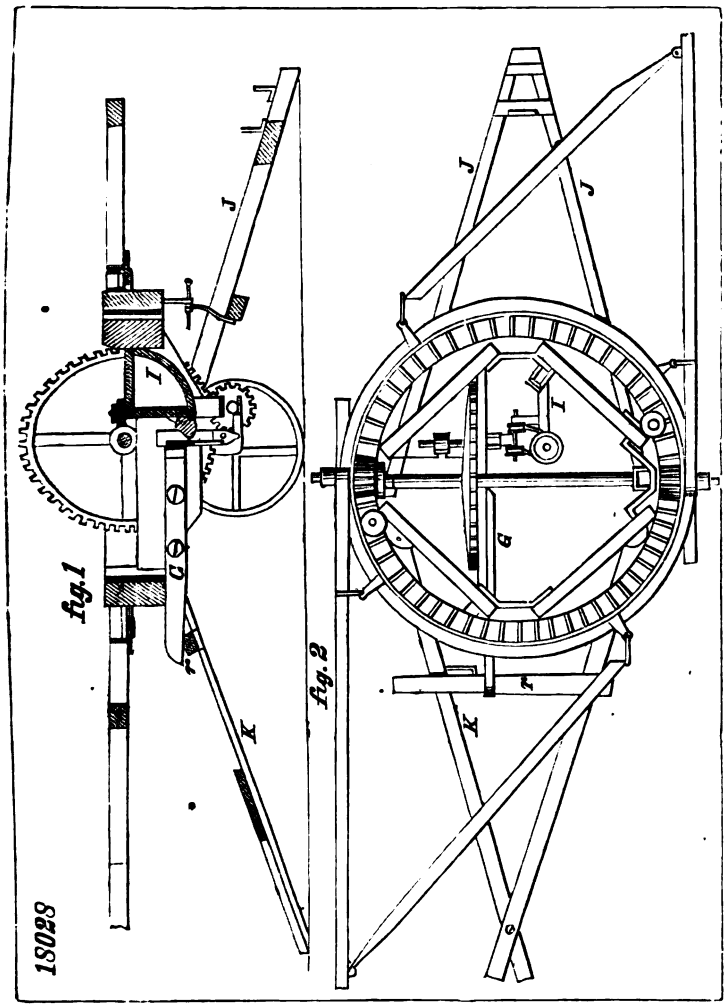
18028
fig.1
fig.2
J
I
G
K

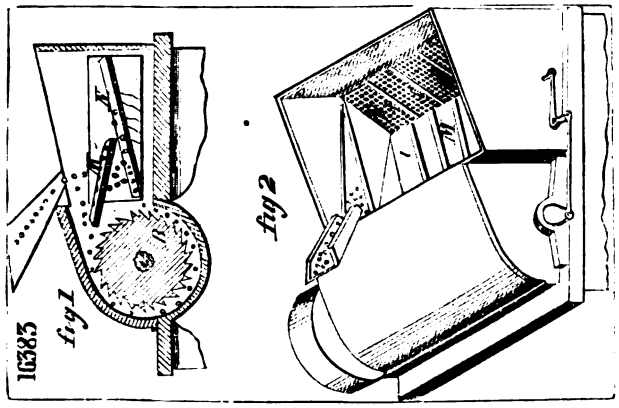
16383
fig.1
fig.2
M

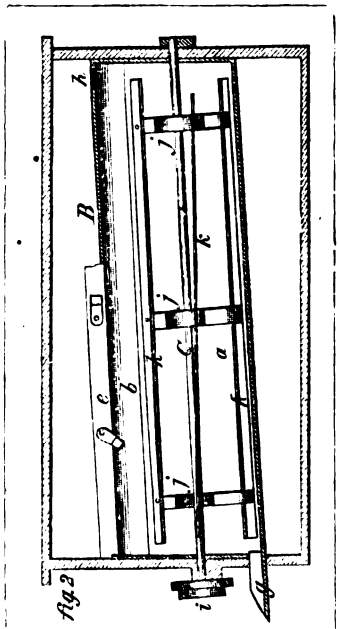
fig.2
fig.1
18179

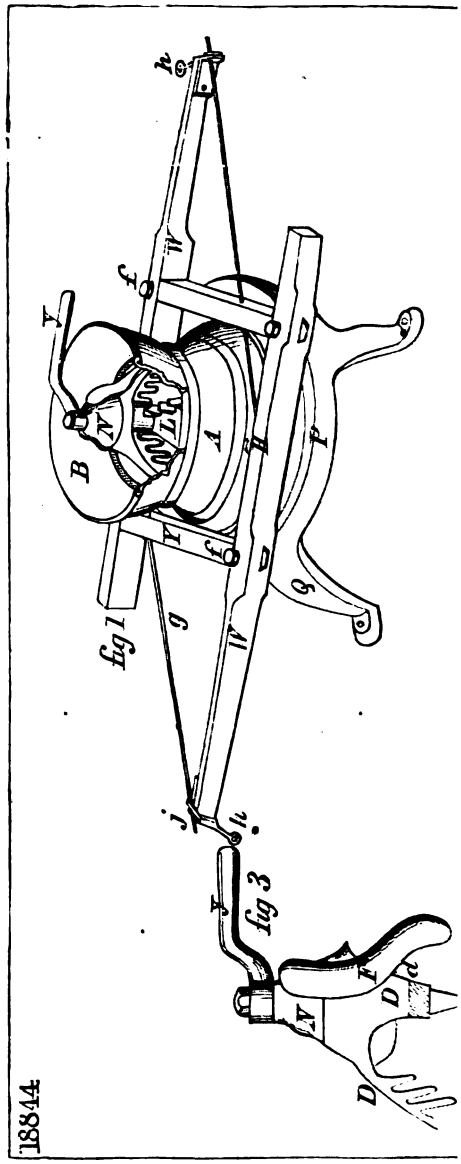
fig 1
fig 3
18844

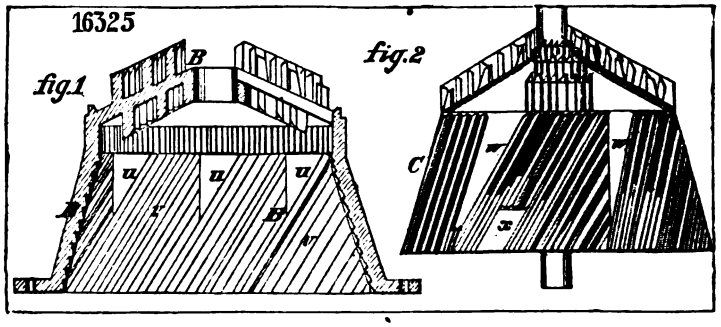
16325
fig.1
fig.2

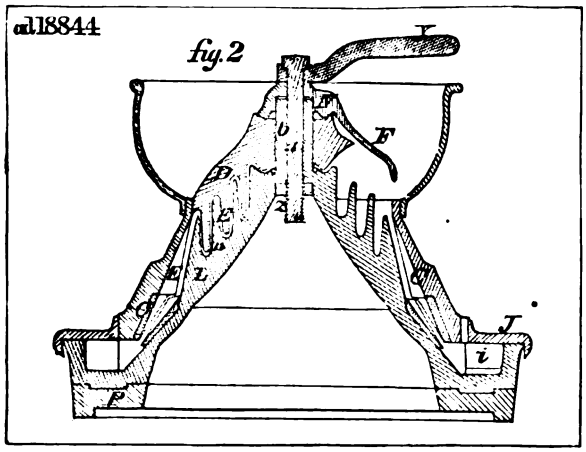
18844
fig. 2

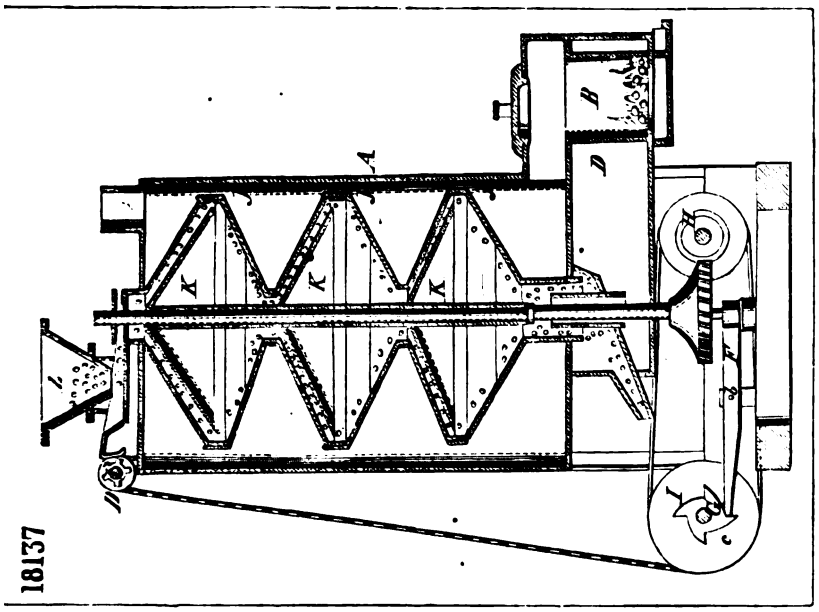
18137

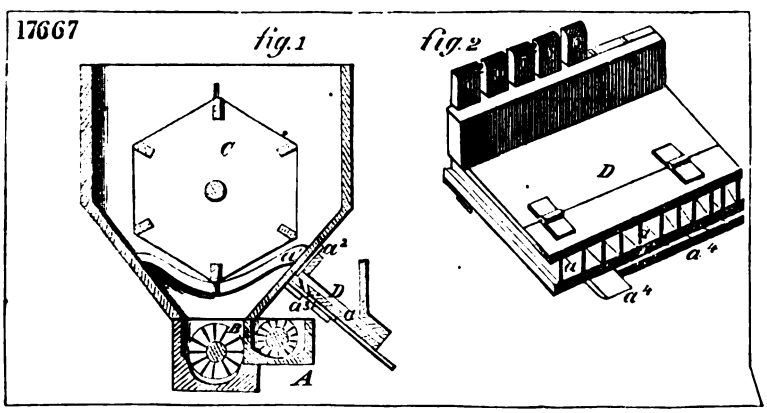
17667
fig. 1
fig. 2

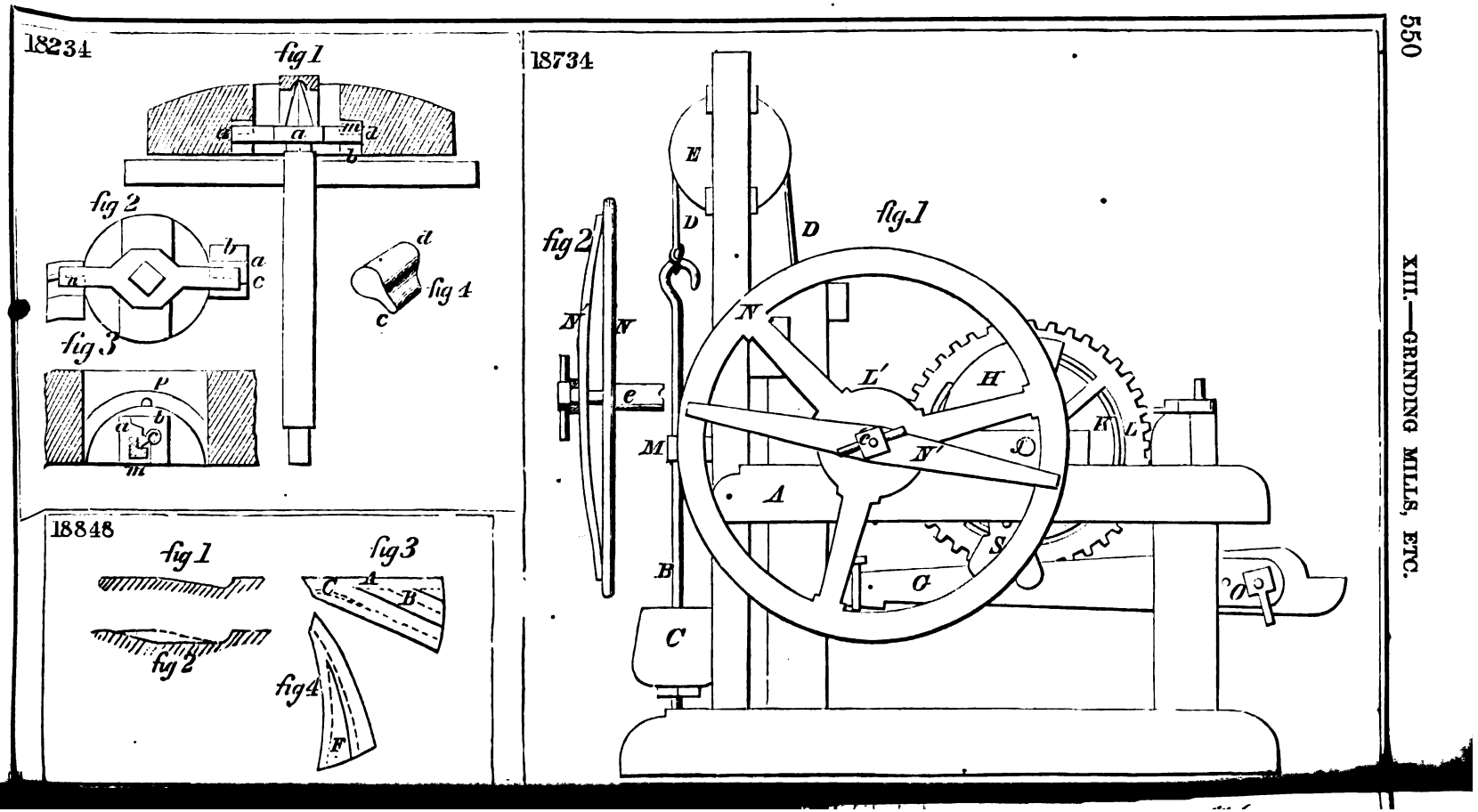
18234
fig 1
fig 2
fig 3
fig 4
18848
fig 1
fig 2
fig 3
fig 4
18734
fig 2
fig 1

17333

fig. 1

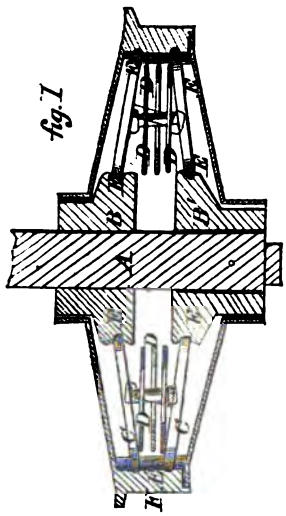

fig. 2

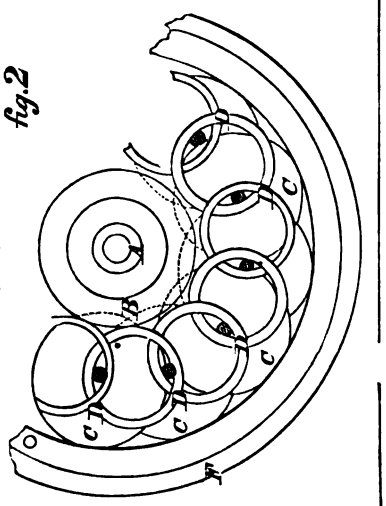

18574

fig 1

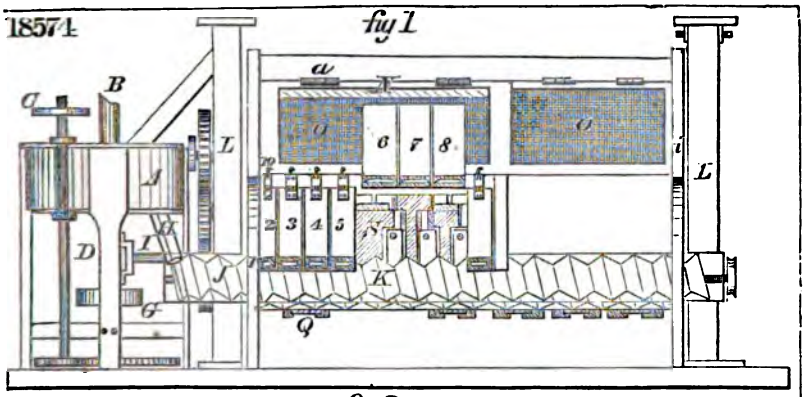

fig. 2

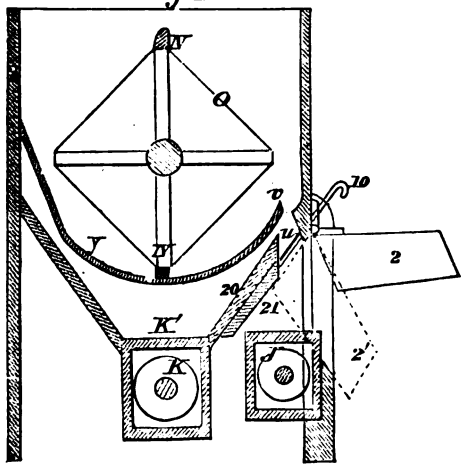

18741

fig. 1

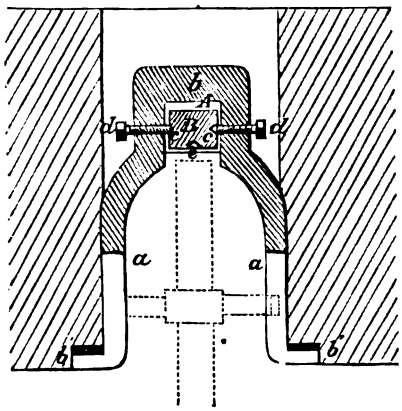

fig. 2

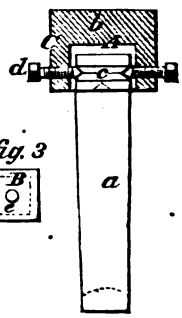

fig. 3

16247

fig 3

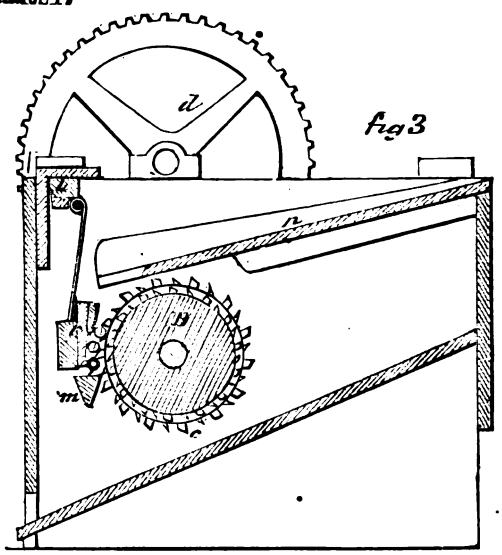

fig 4

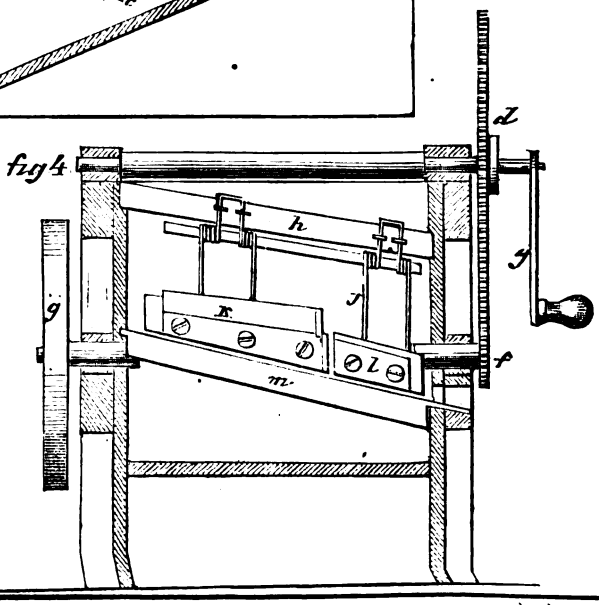

16847

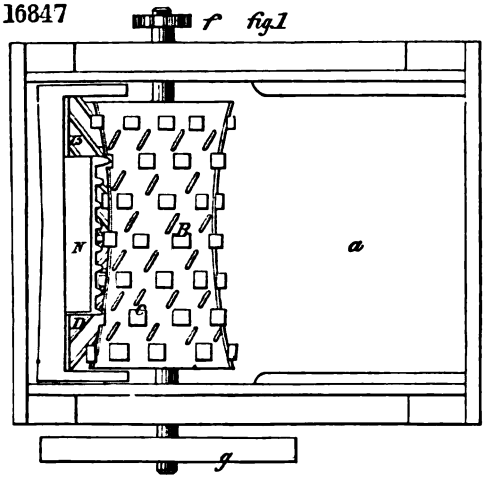

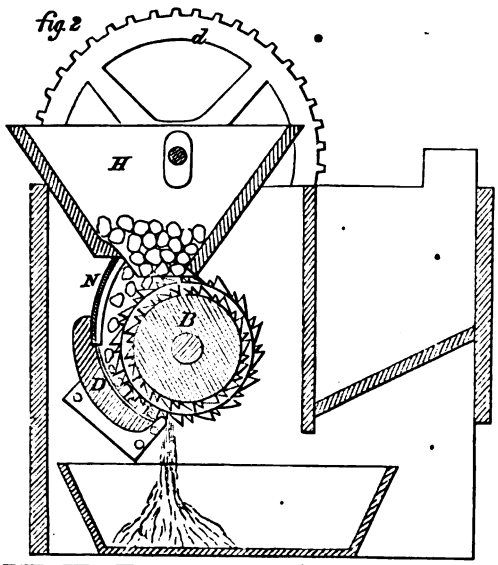

17446

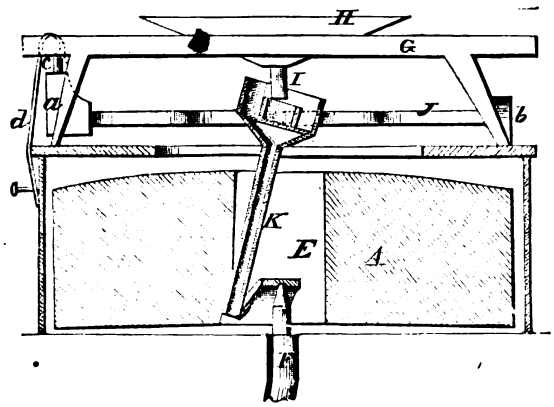

16988

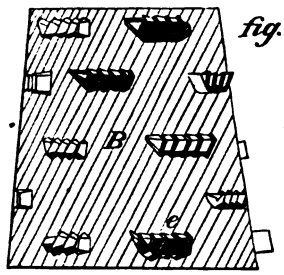

fig. 1

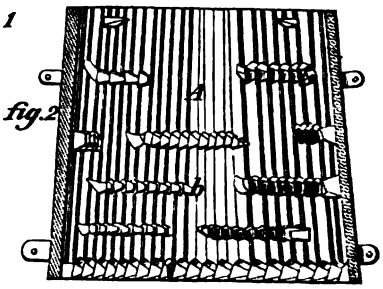

fig. 2

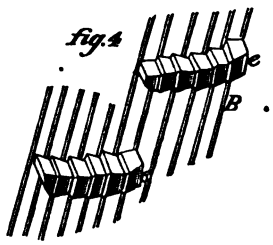

fig. 4

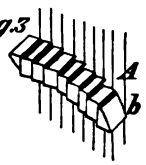

fig. 3

17619

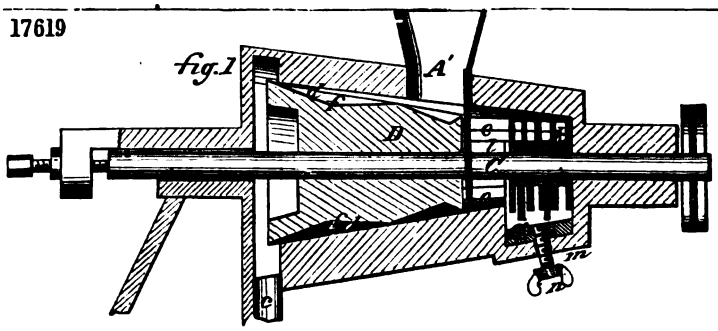

fig. 1

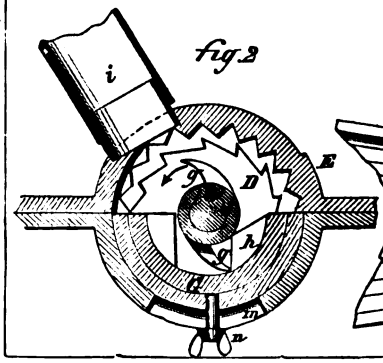

fig. 2

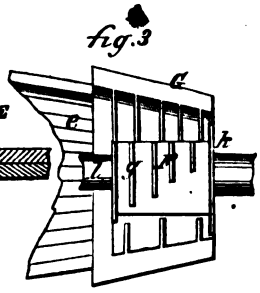

fig. 3

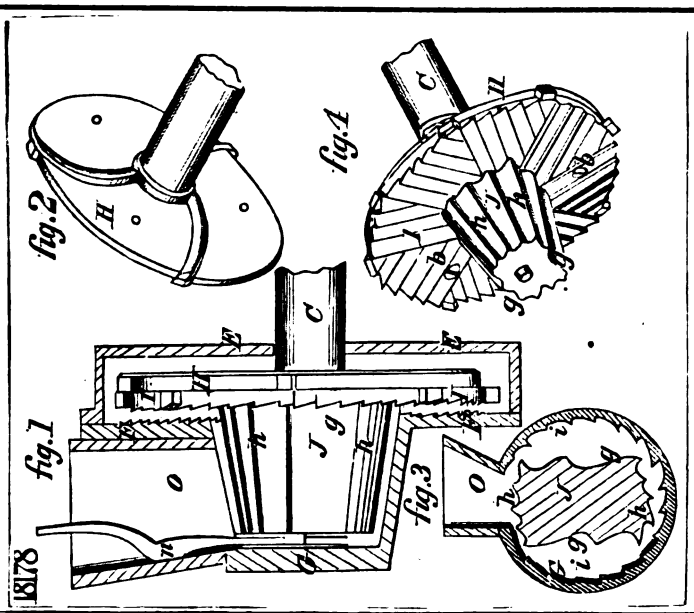

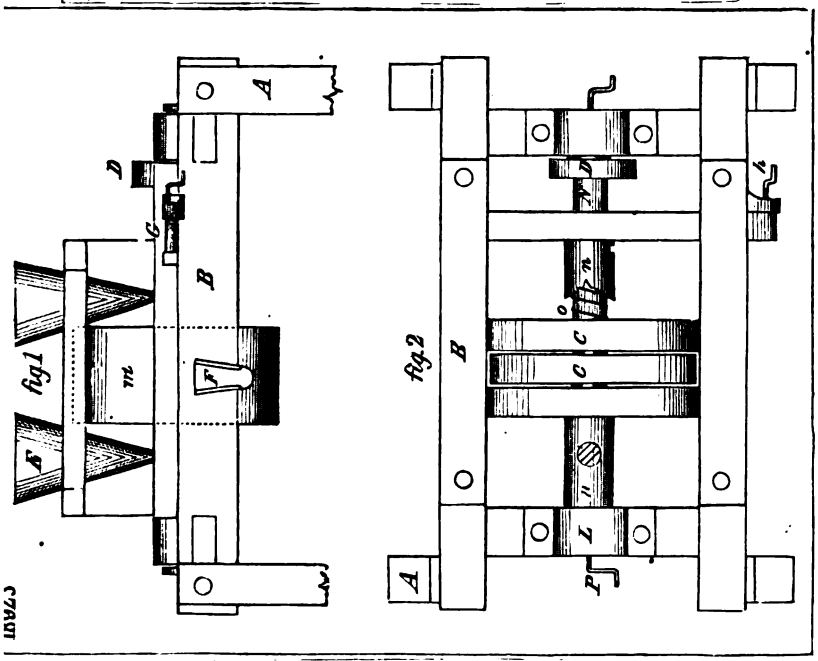

ad 18923

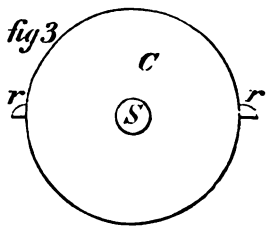

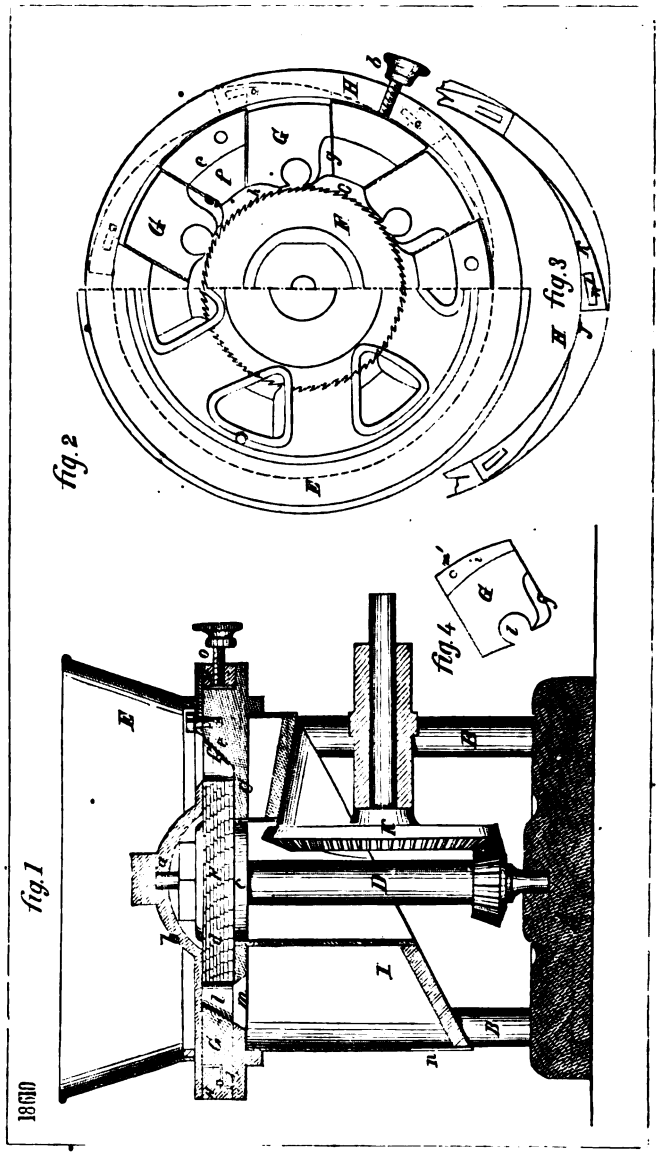
fig. 2
fig. 3
fig. 4
fig. 1
18610

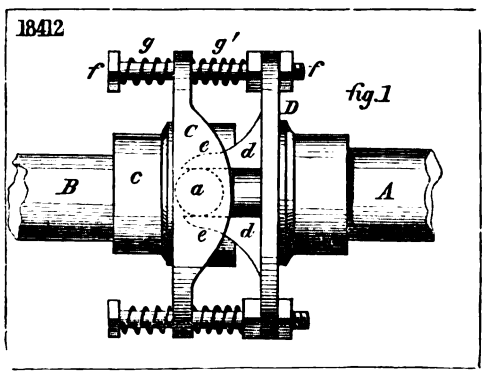
18412
fig. 1
A
B
C
D
a
c
d
e
f
g
g'

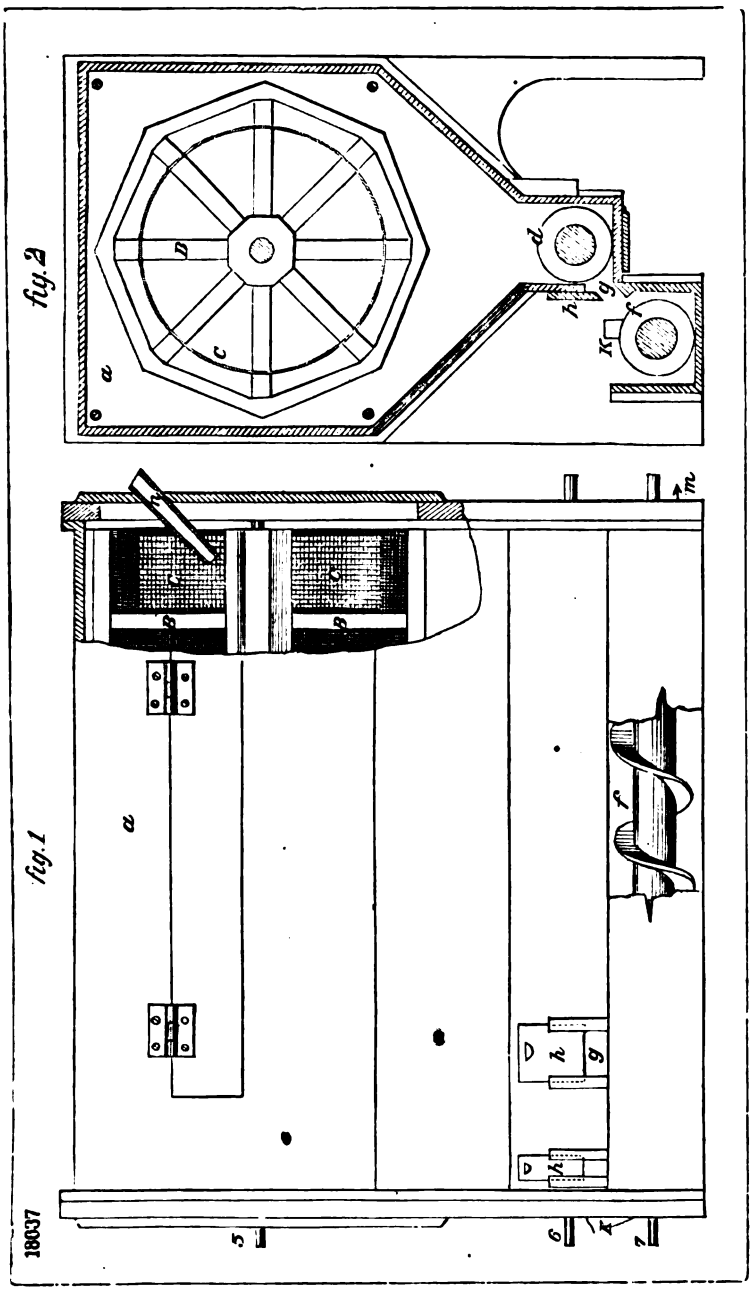
fig. 2
fig. 1
18037

18093

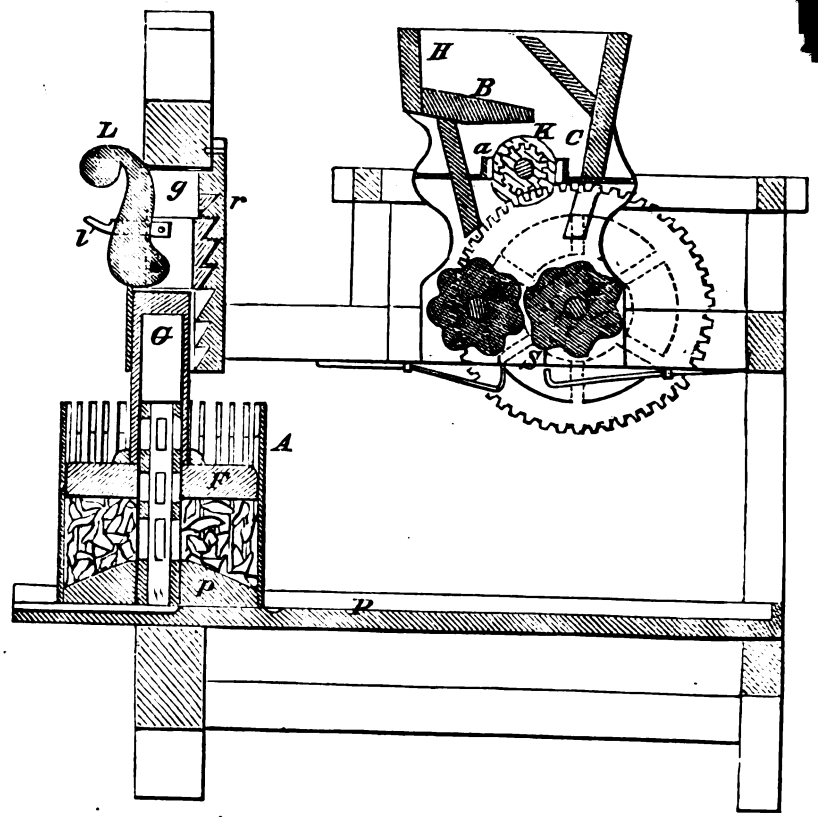

17421

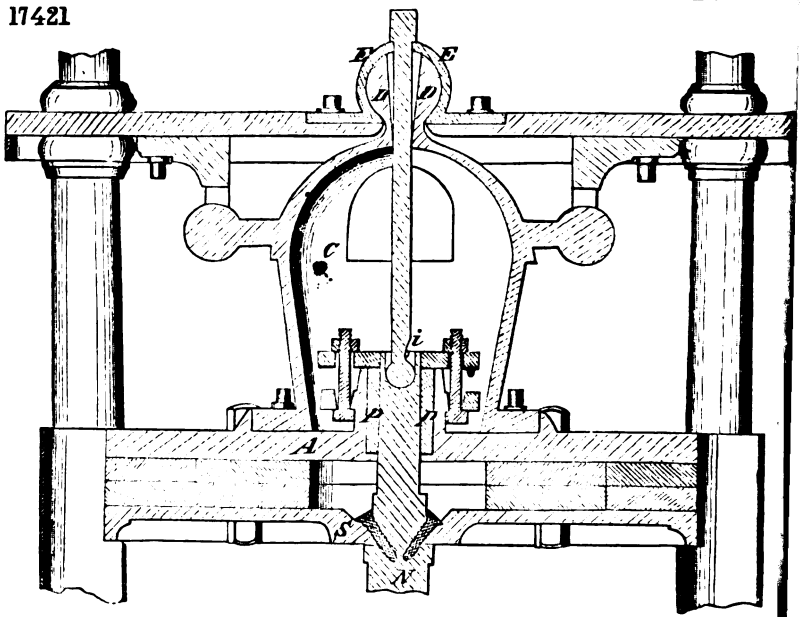

18191

fig 1

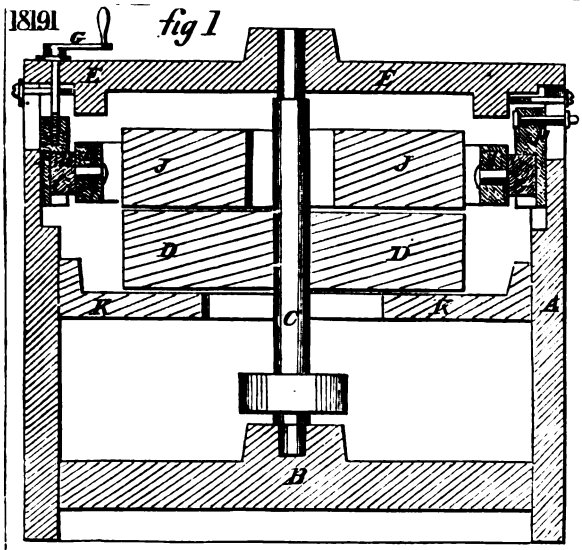

fig 2

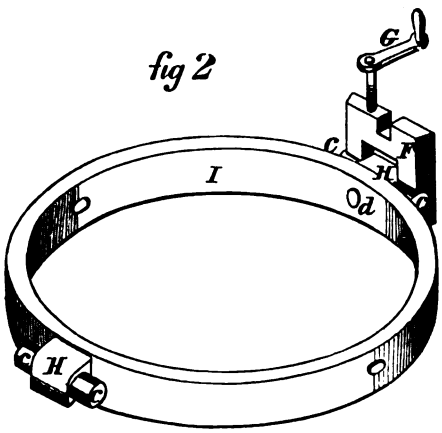

fig 3

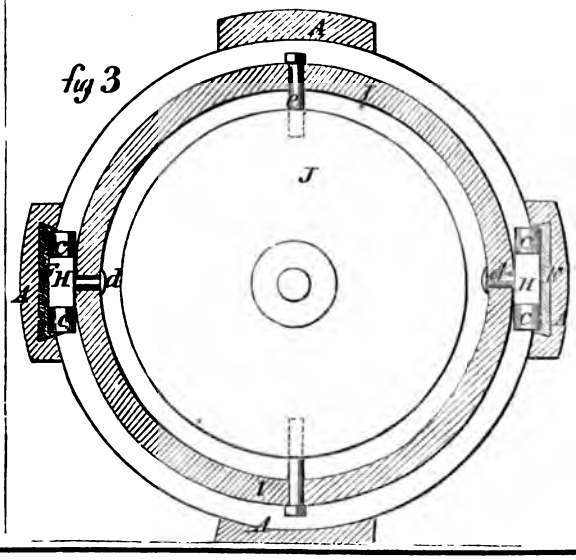

17326

fig.1

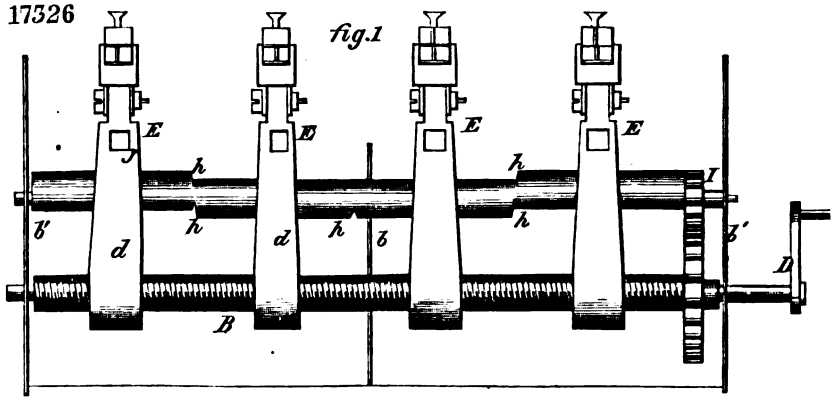

fig.2

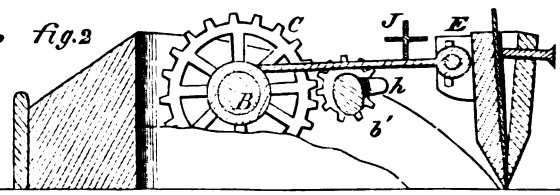

18163

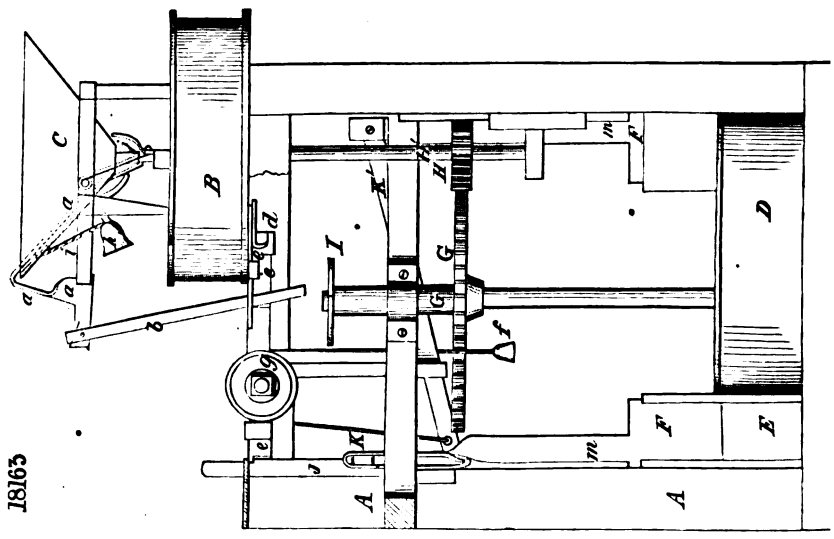

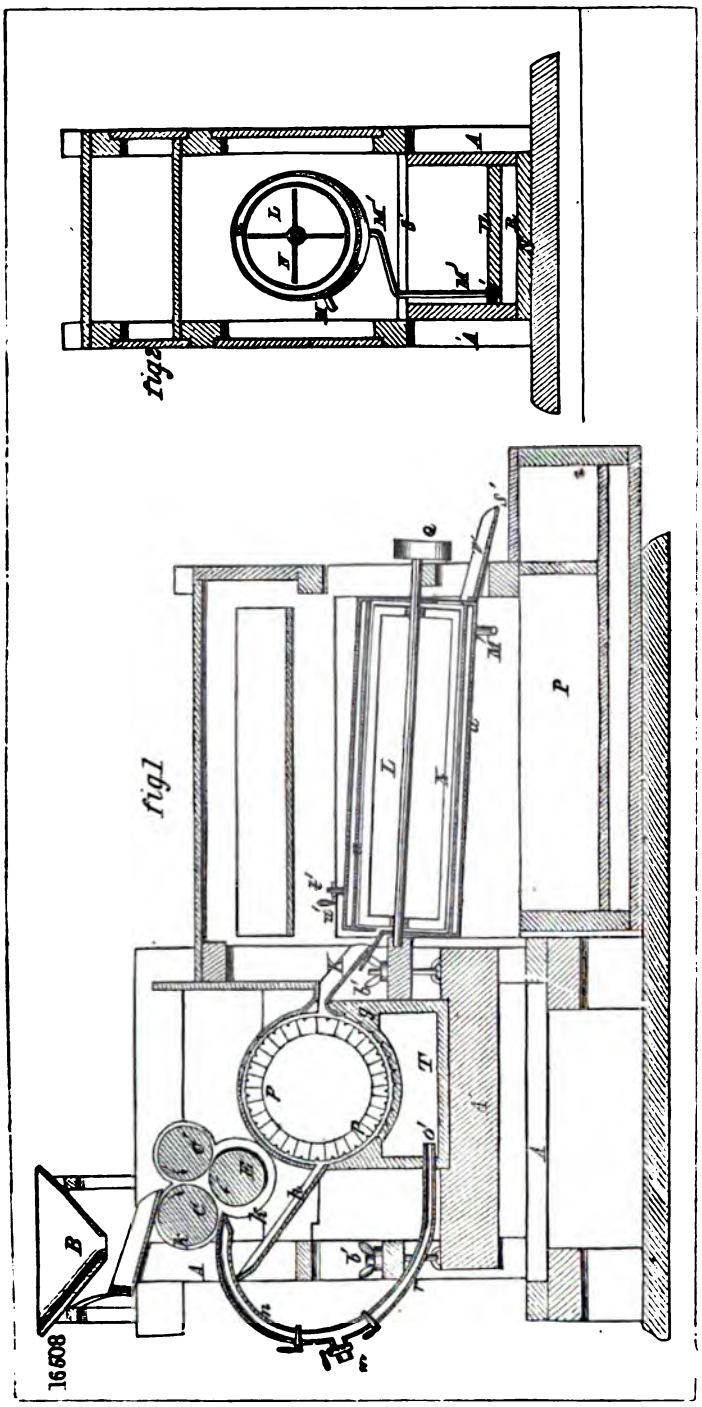
fig2
fig1
16608

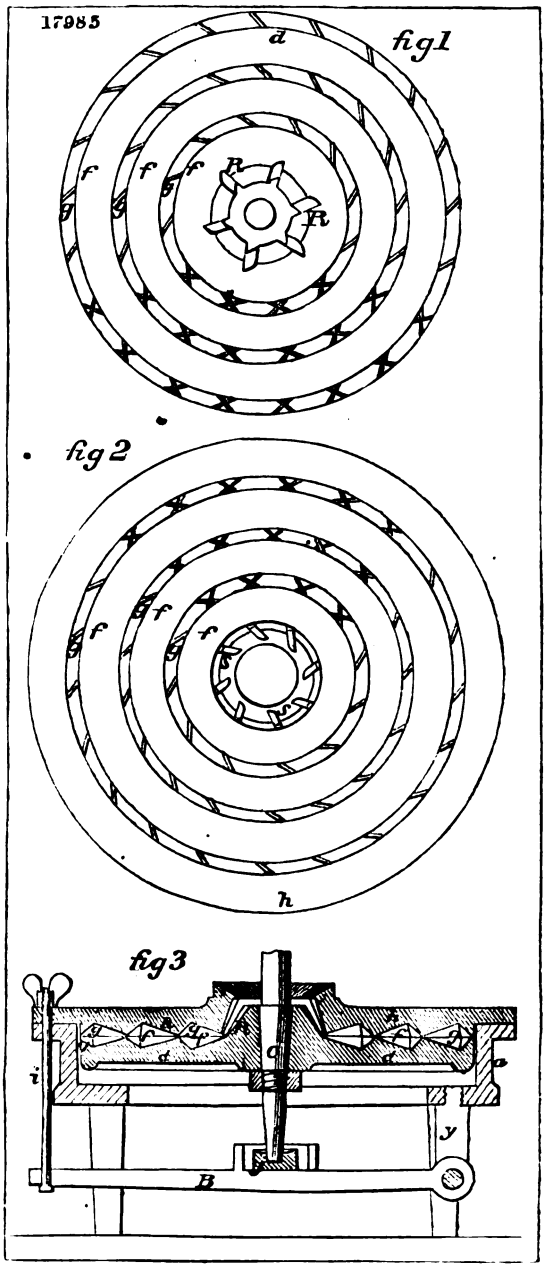
17985
fig1
d
f
R
fig2
h
fig3
i
y
B

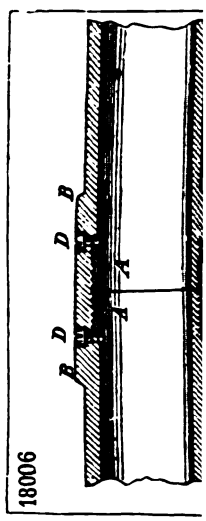
18006
D
B
A

16615

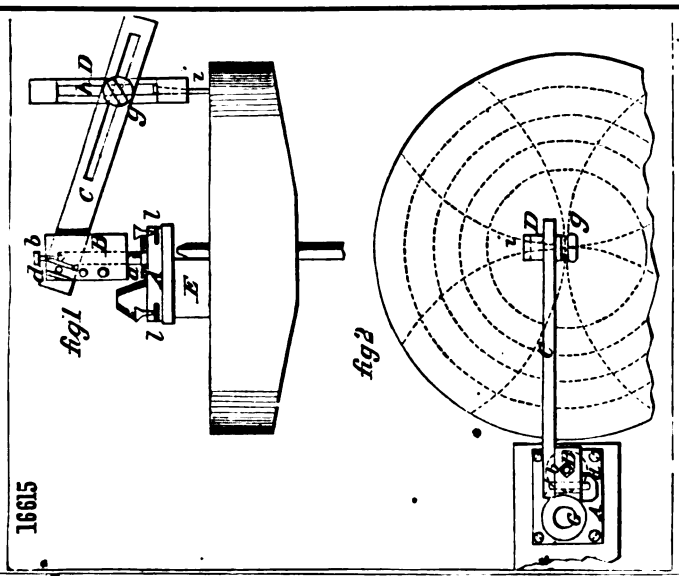

17116

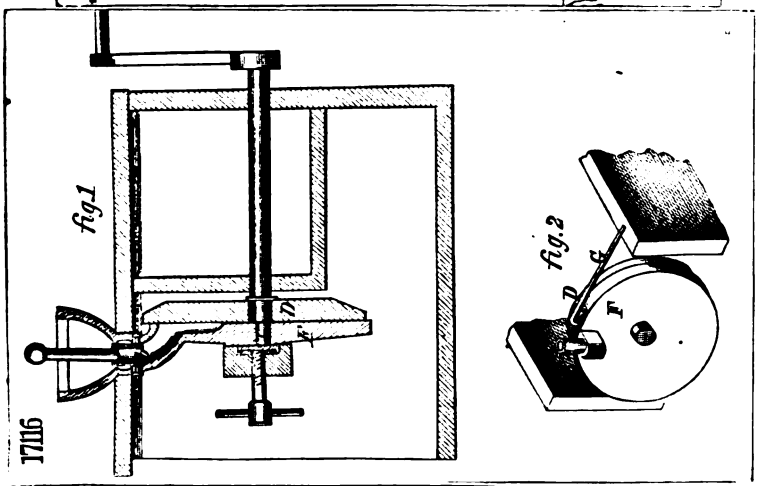

17995

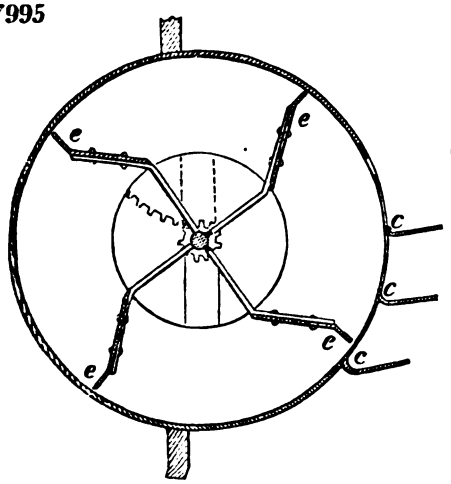

18985

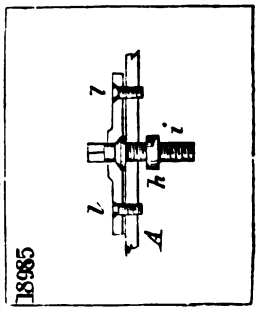

18985

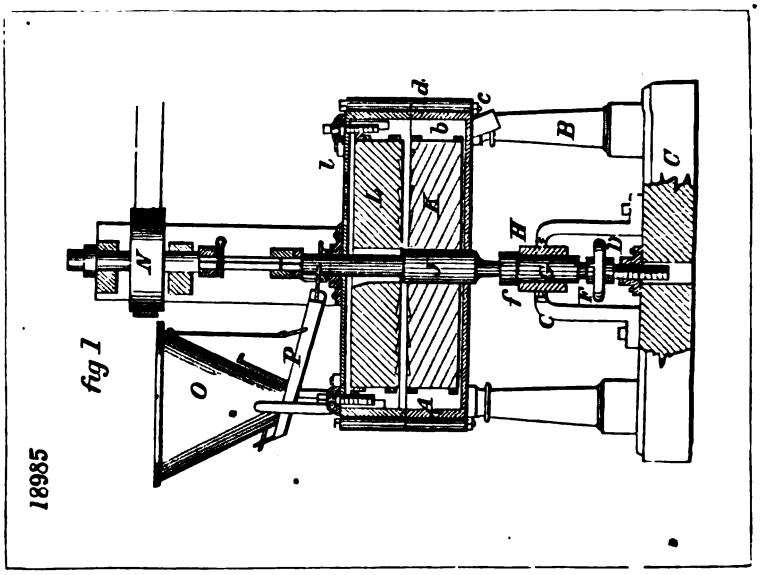

16987

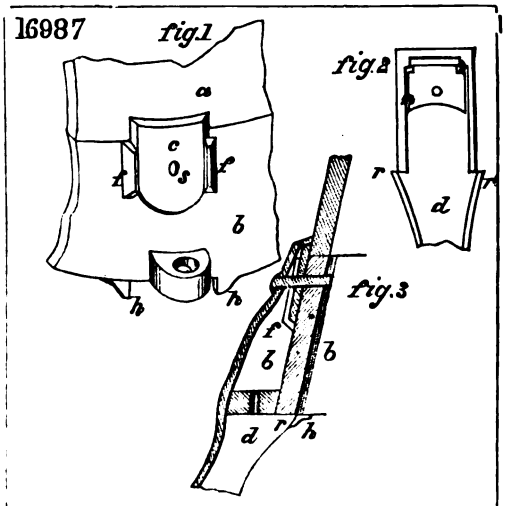

17565

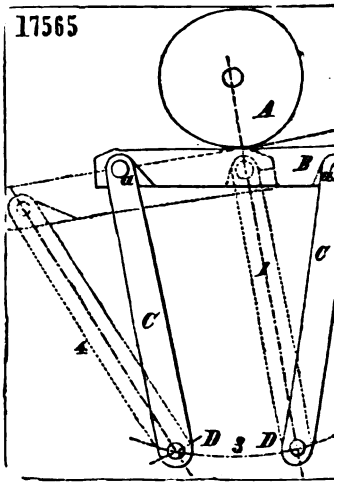

18176

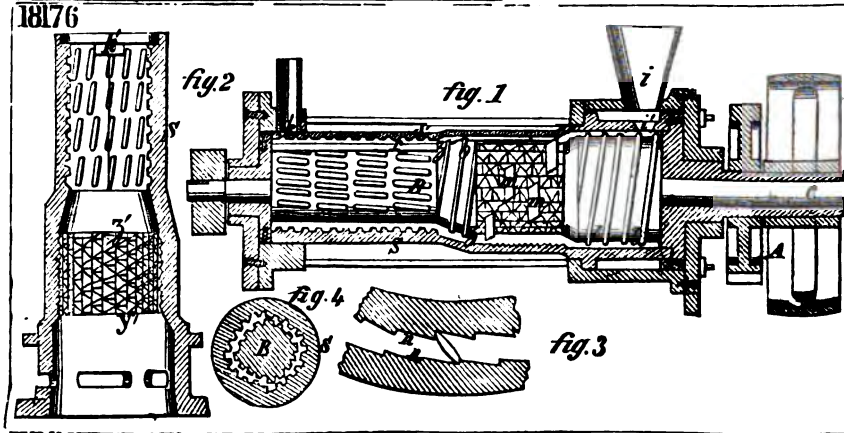

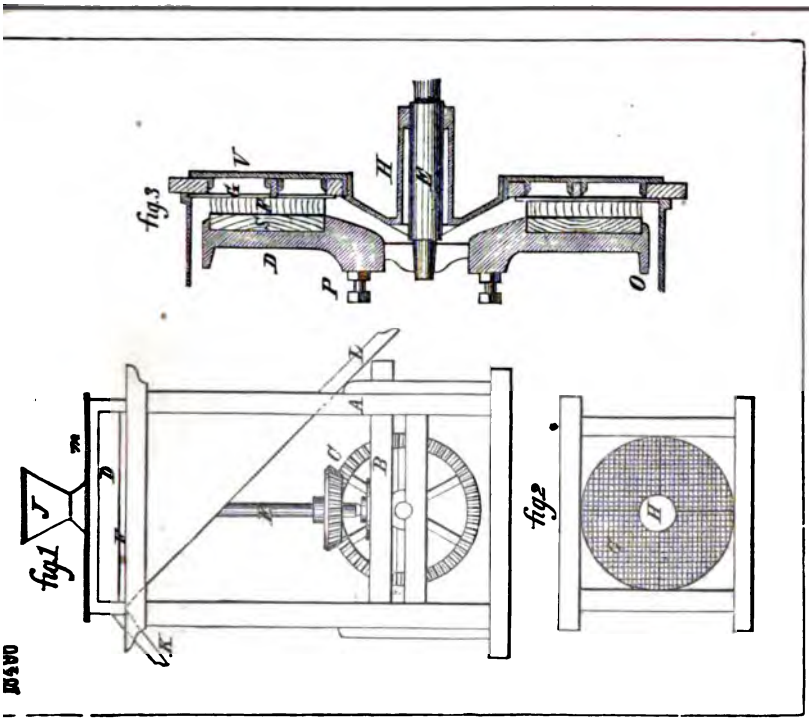
fig.3
fig.1
fig.2

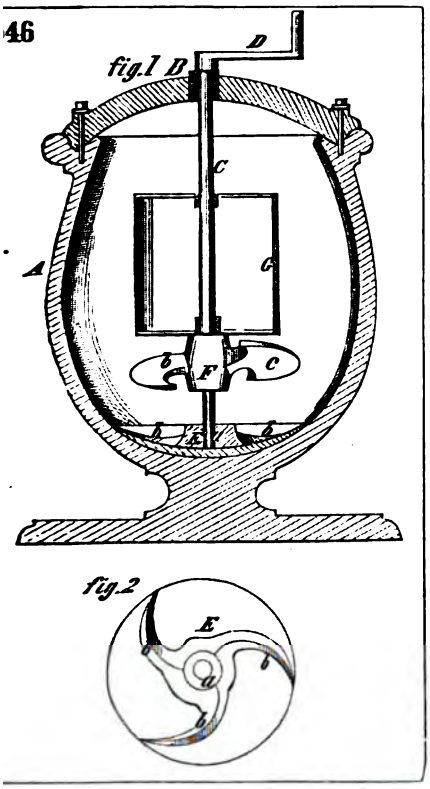
46
fig.1
fig.2

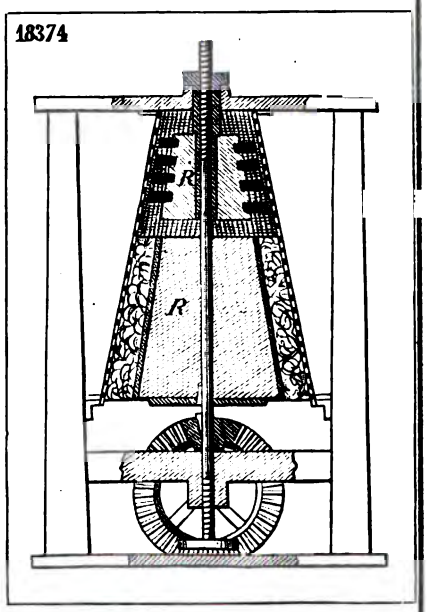
18374

17882

fig. 1

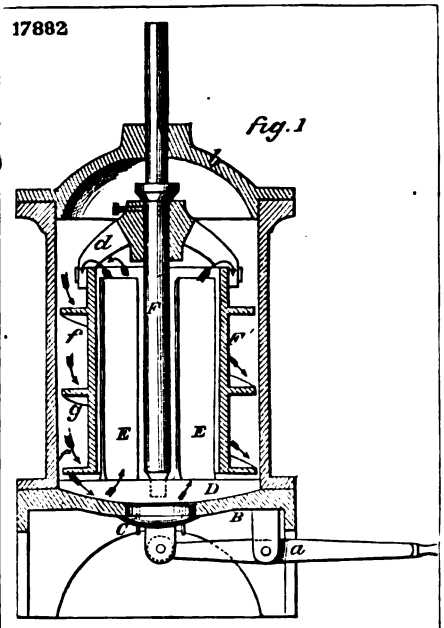

fig. 2

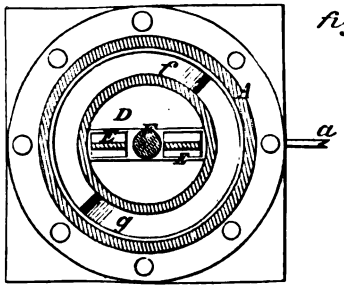

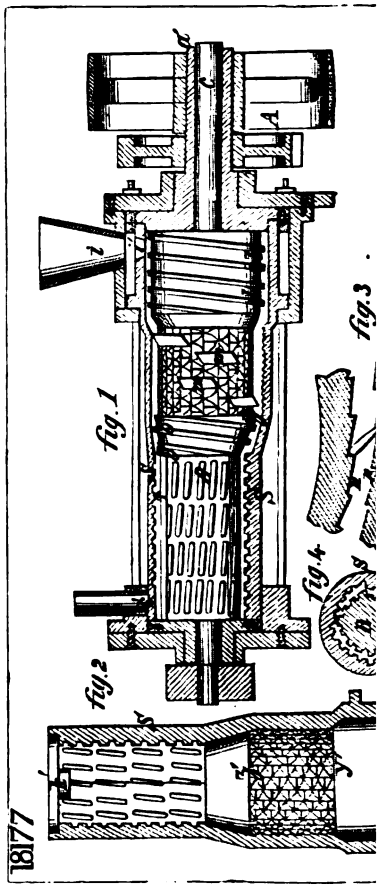

17716

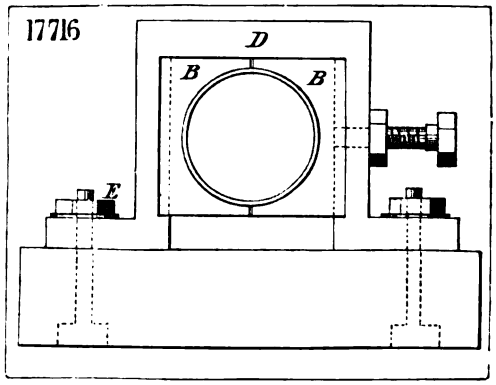

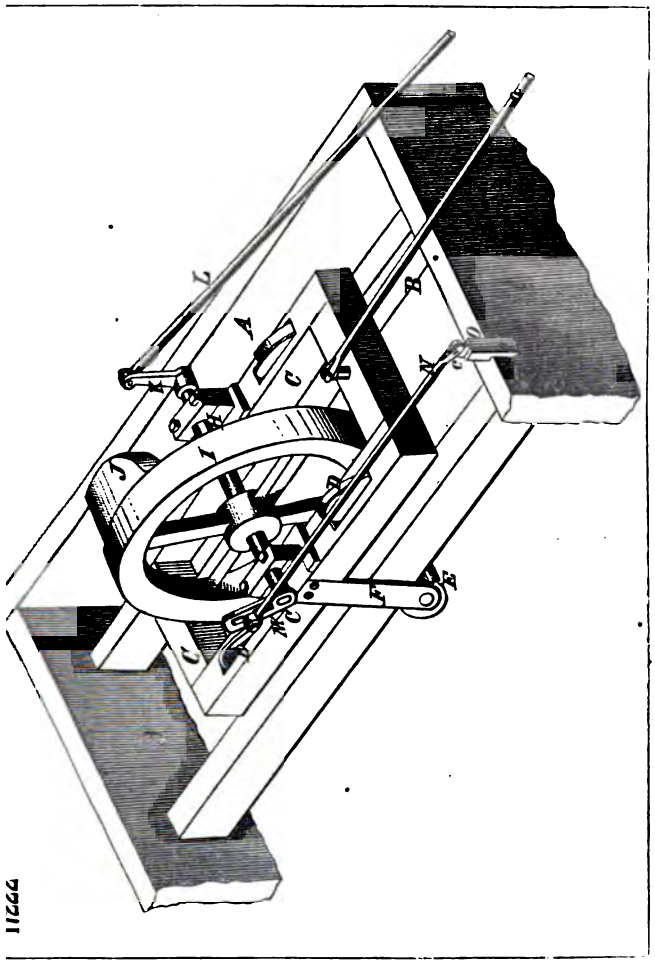

11244

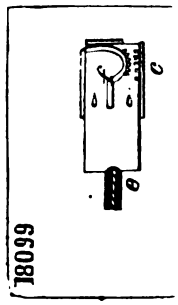

18099

17236

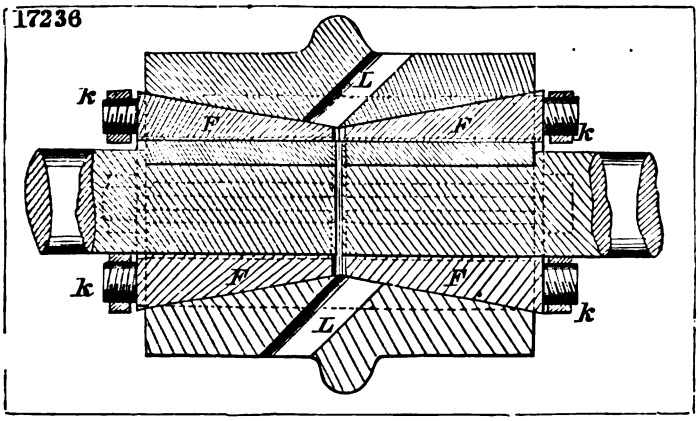

17869

fig. 1

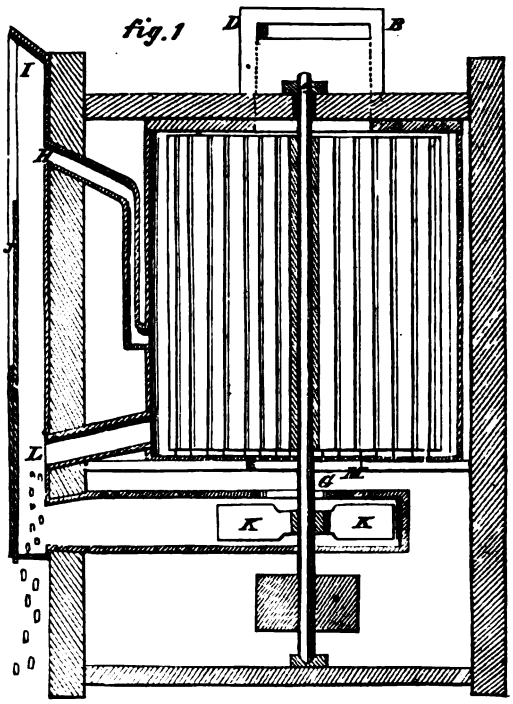

fig. 2

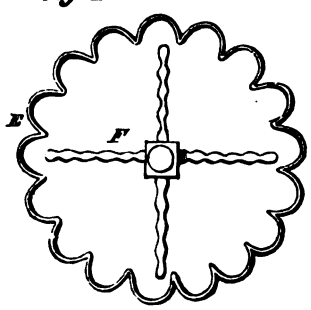

16980

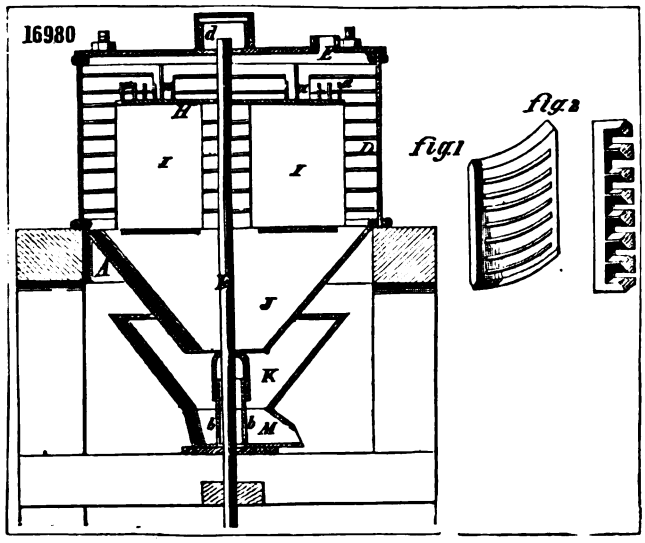

18484.

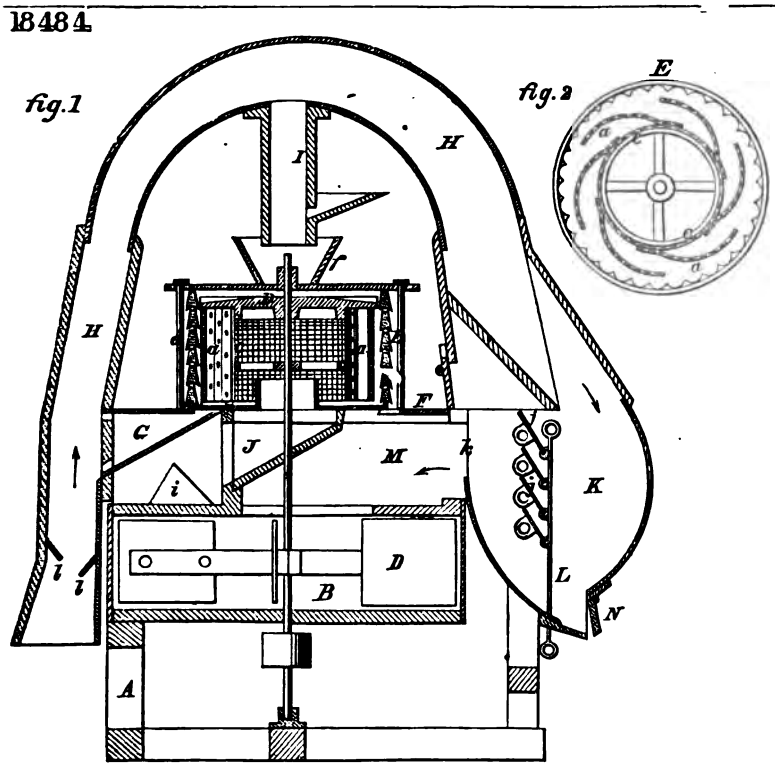

16897

fig. 1

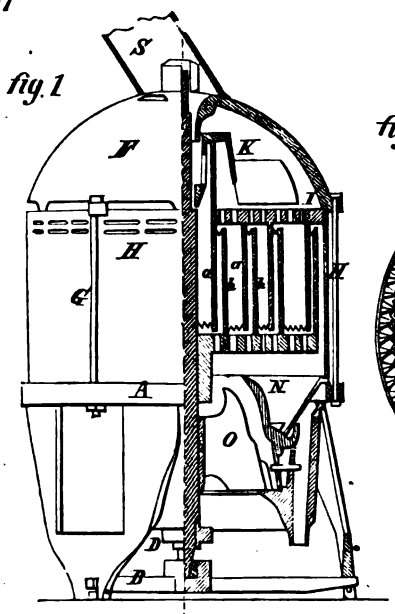

fig. 2

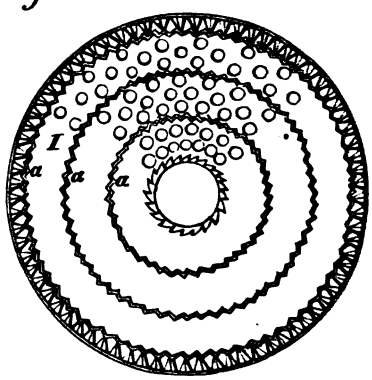

18419

fig 2

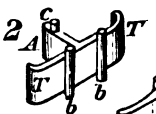

fig 5

fig 1

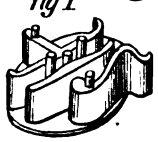

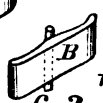

fig. 3

fig. 4

18727

fig. 1

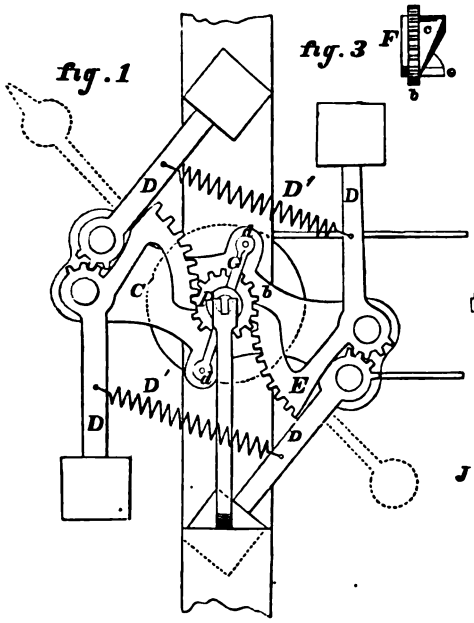

fig. 3

fig. 2

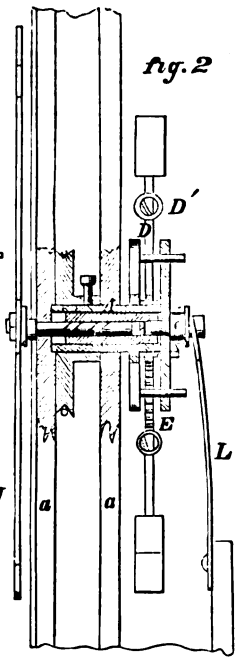

17596

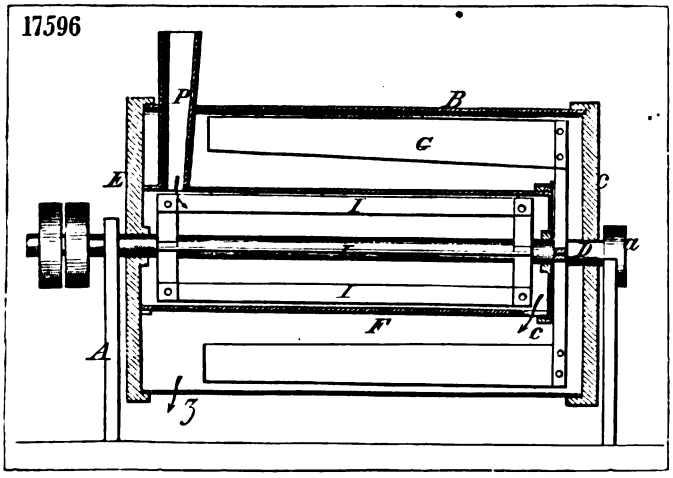

16399

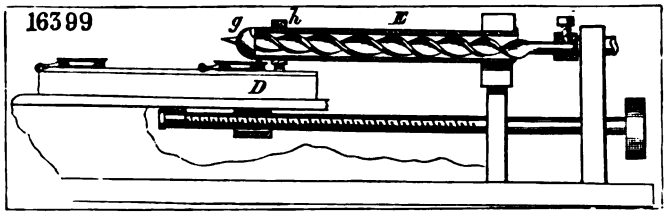

18549

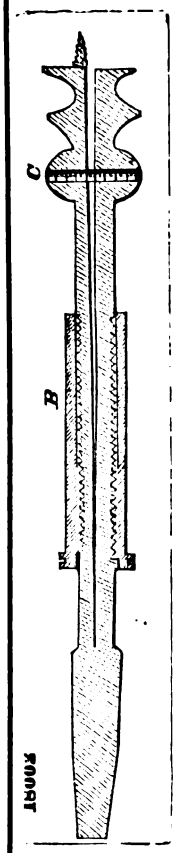

fig 1

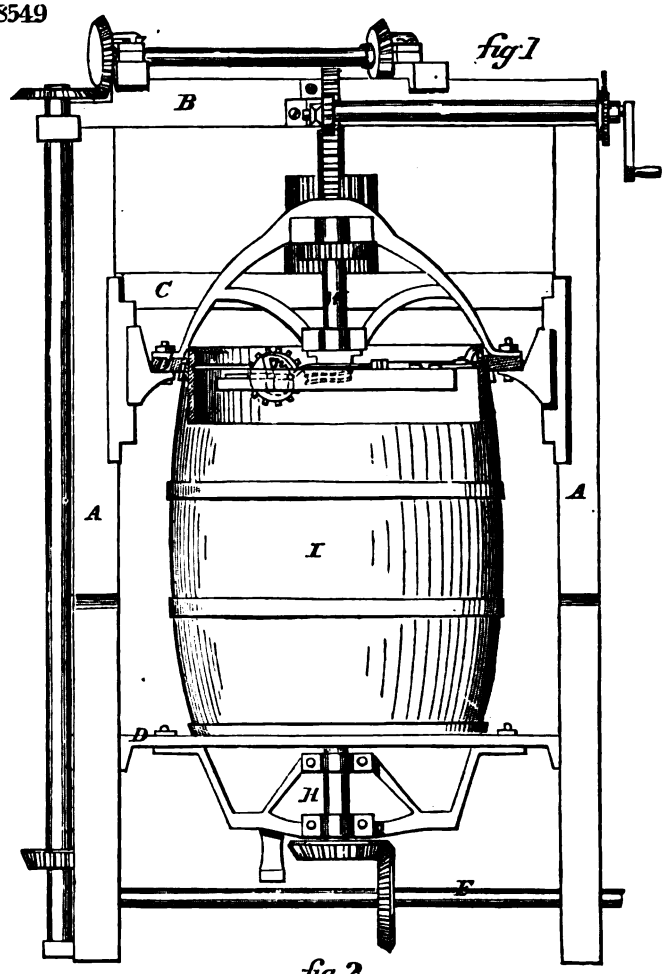

fig 2

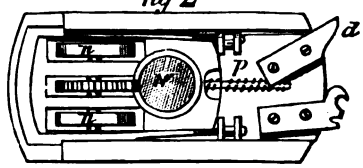

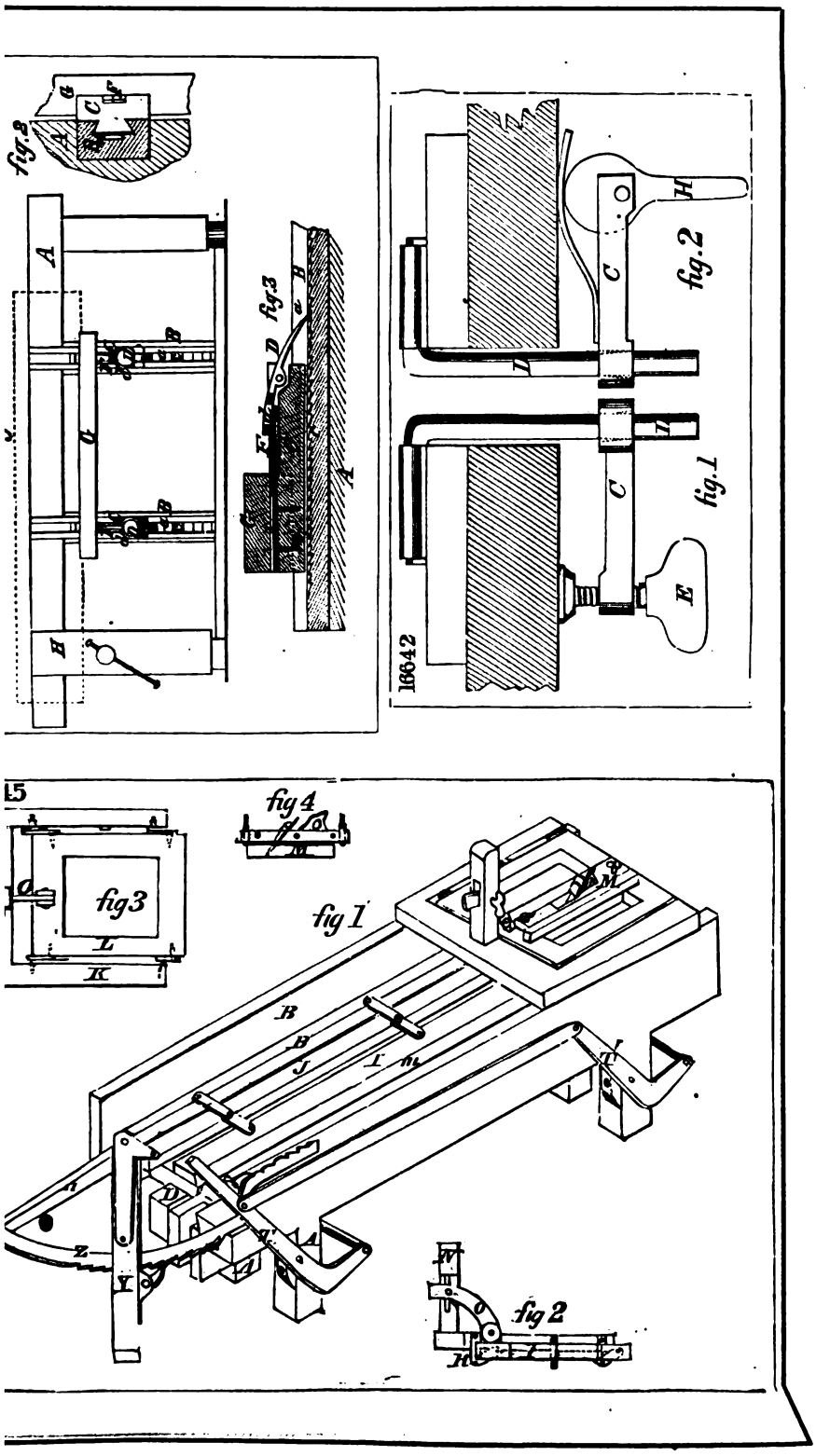
fig.2
fig.3
fig.2
fig.1
16642
fig 4
fig3
fig 1
fig 2

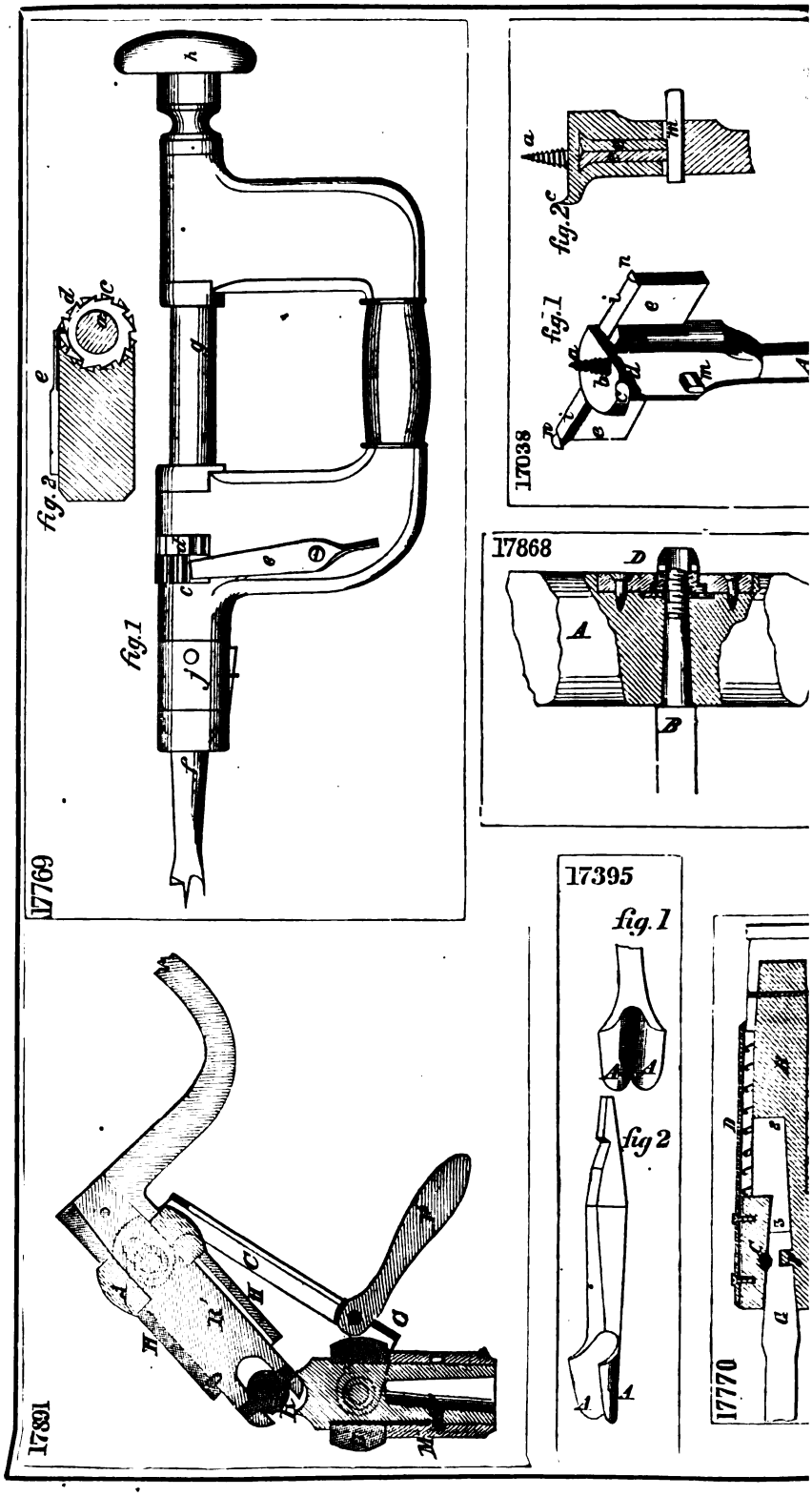
17769
fig. 1
fig. 3
17038
fig. 1
fig. 2c
17868
17395
fig. 1
fig 2
17770
17891

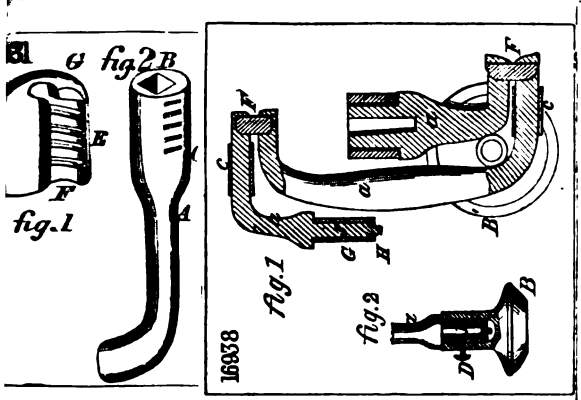

18282

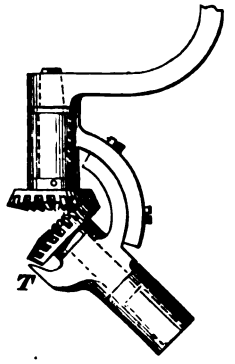

7341

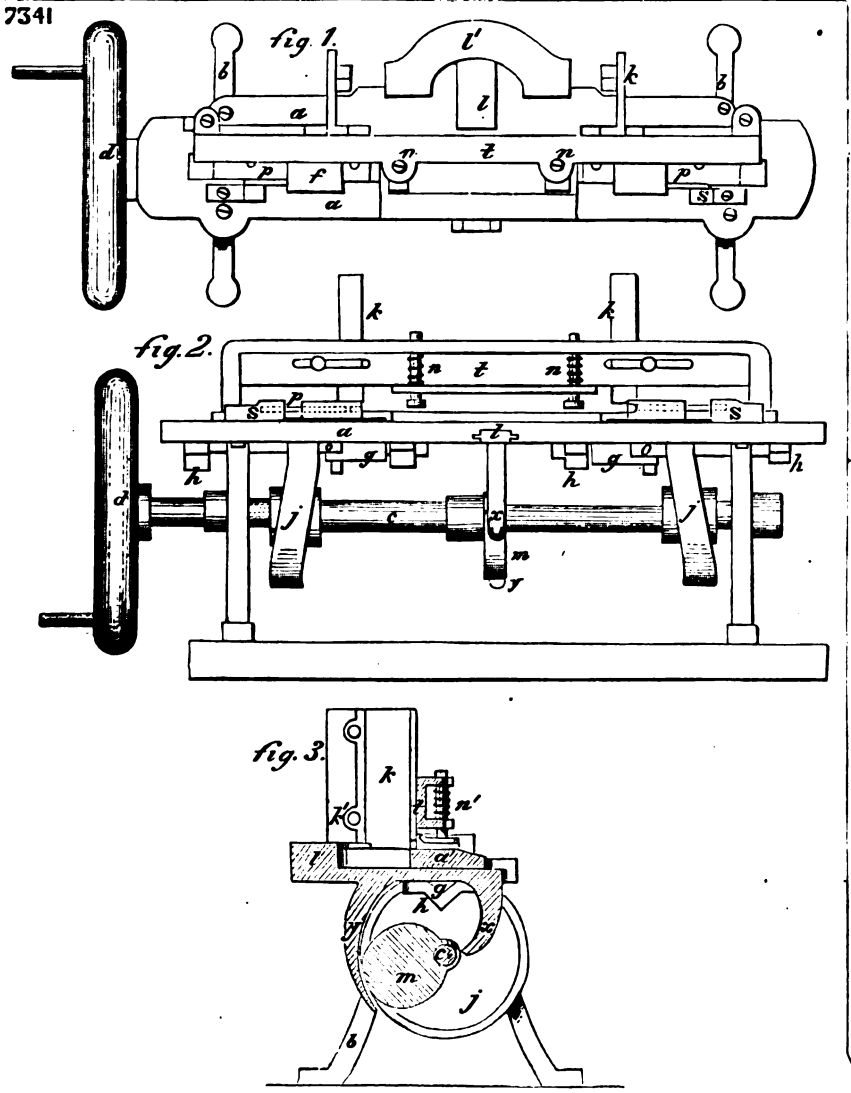

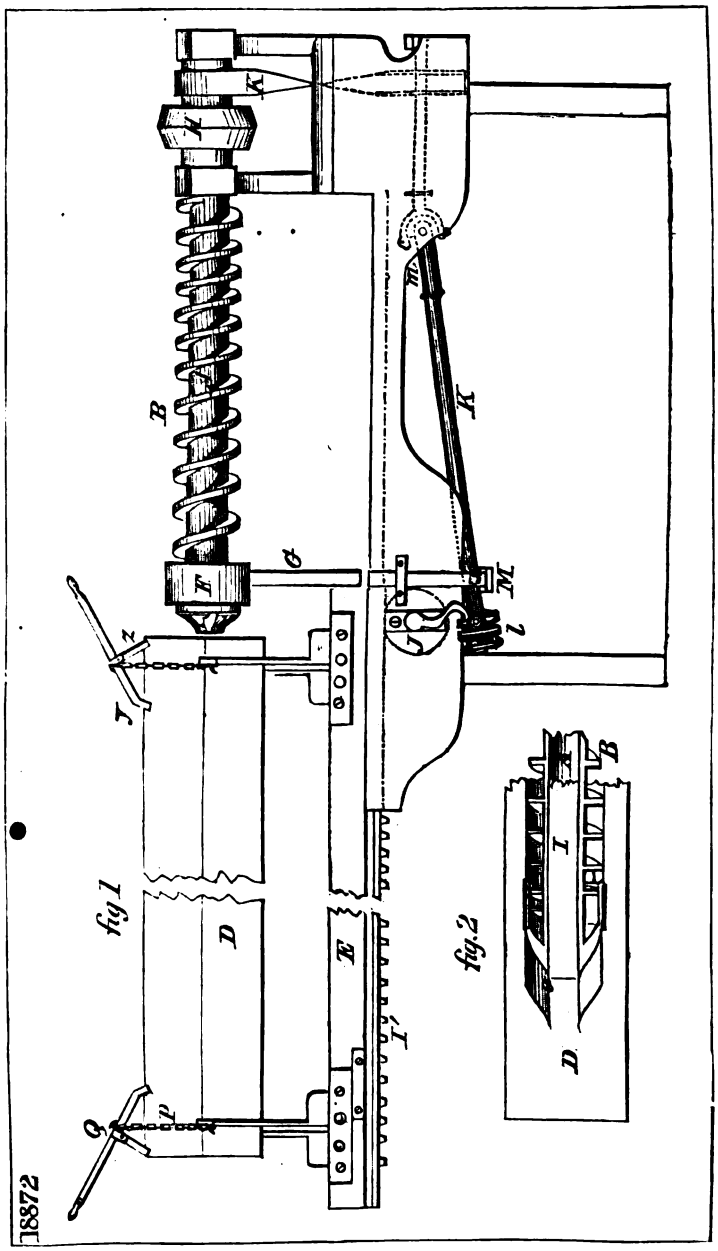
fig 1
fig 2
18872

99

fig 1

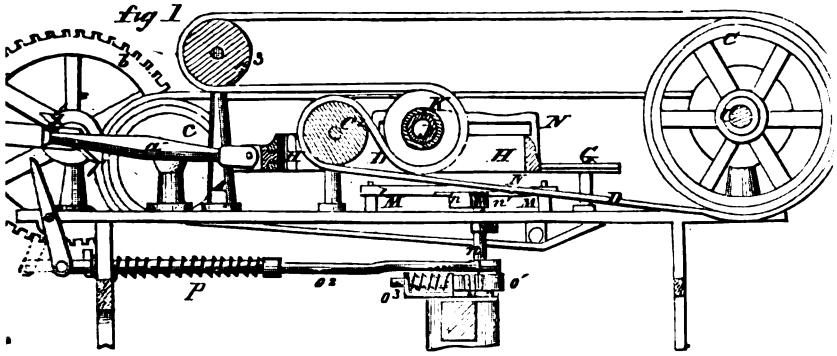

fig 2

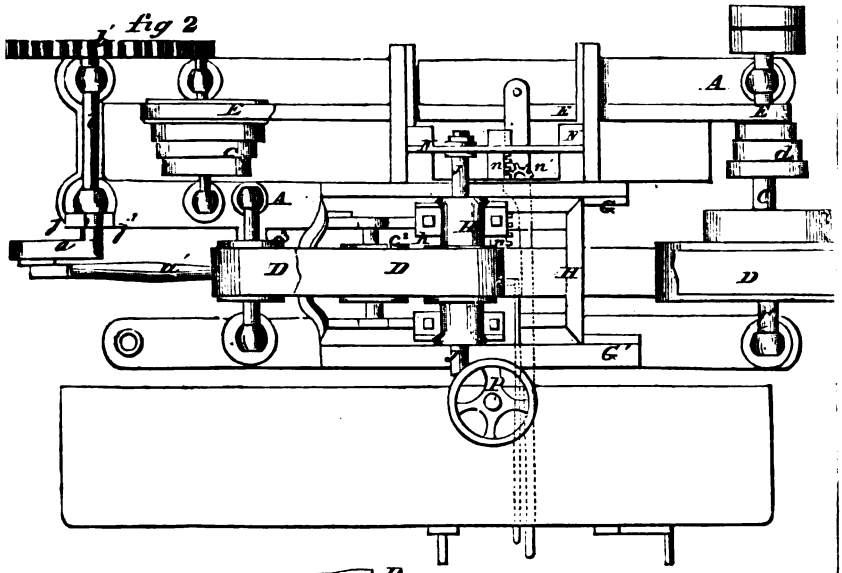

fig 3

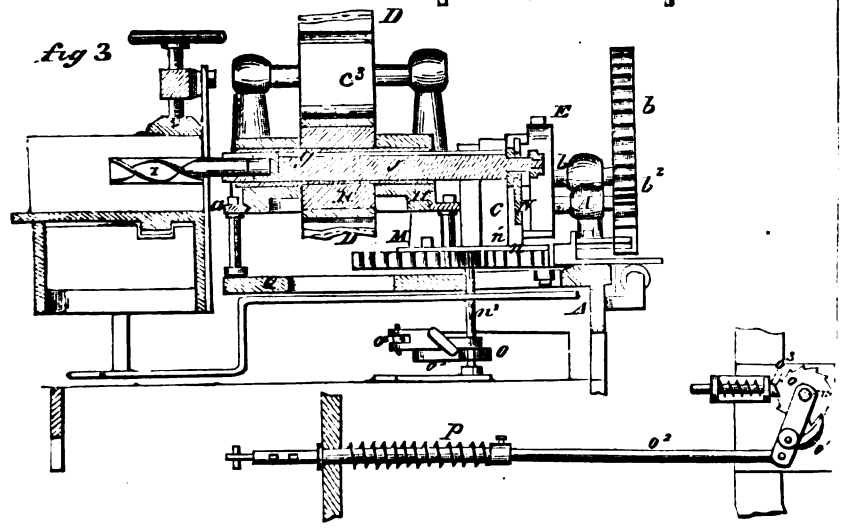

18370

fig. 1

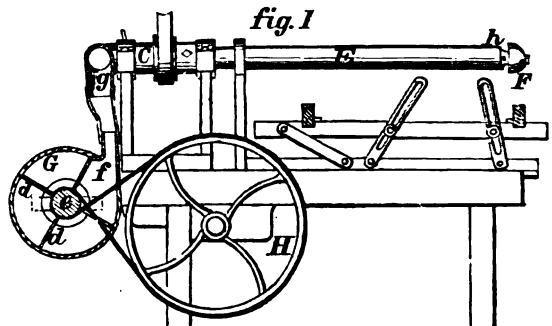

fig. 2

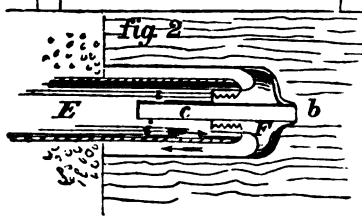

16800

fig. 1

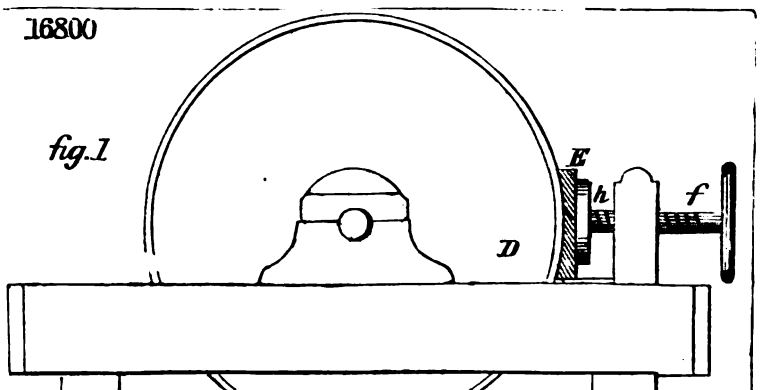

fig. 2

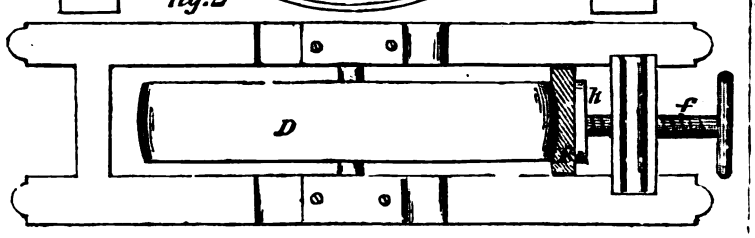

18161

fig. 1

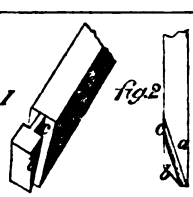

fig. 2

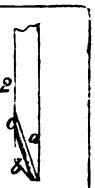

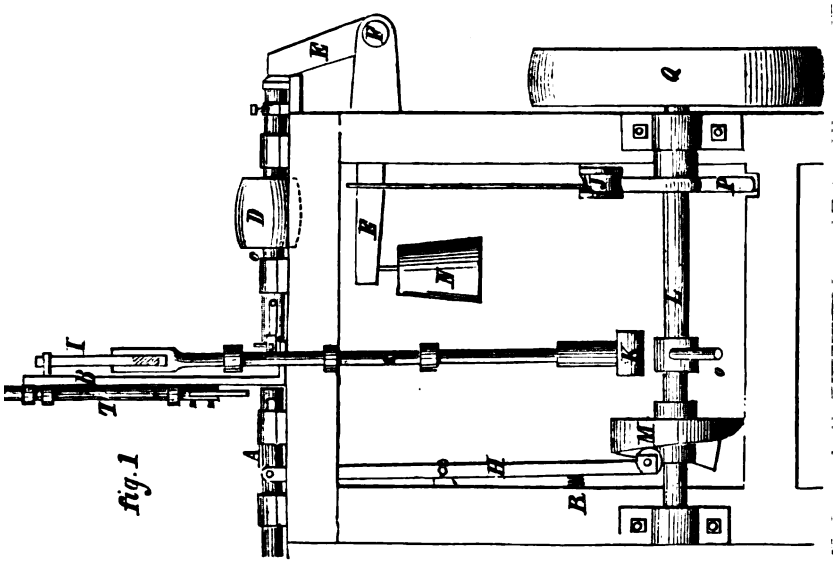

fig. 1

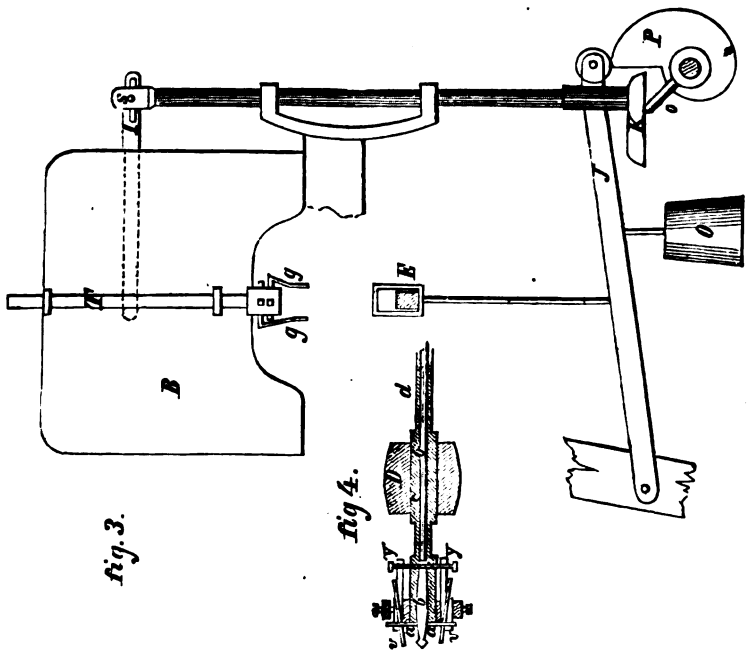

fig. 3.

fig 4.

ad 18287

fig. 2

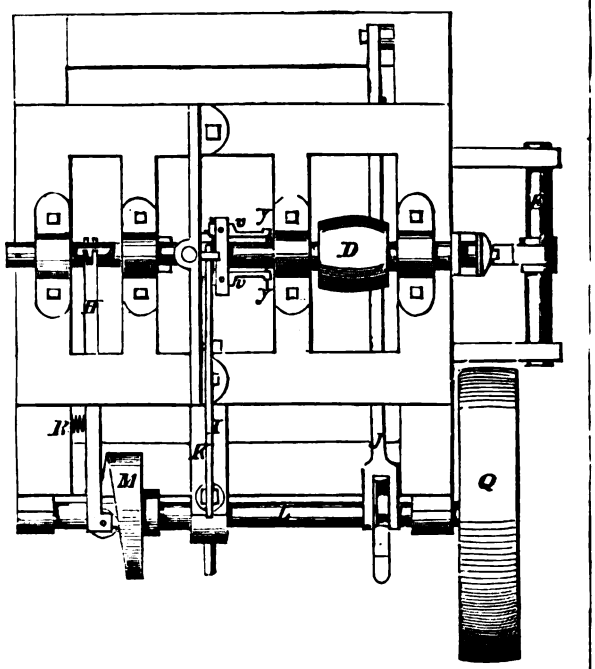

17001

fig. 3

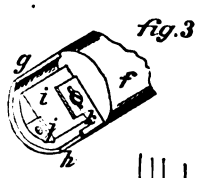

fig. 1

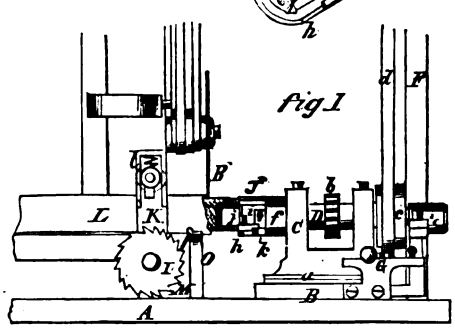

fig 2

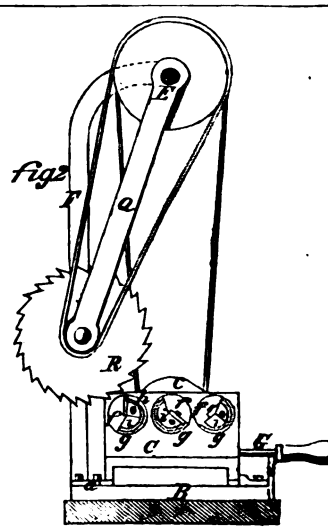

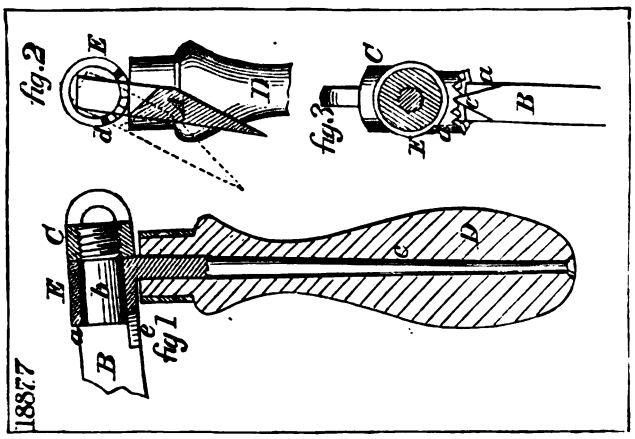

838

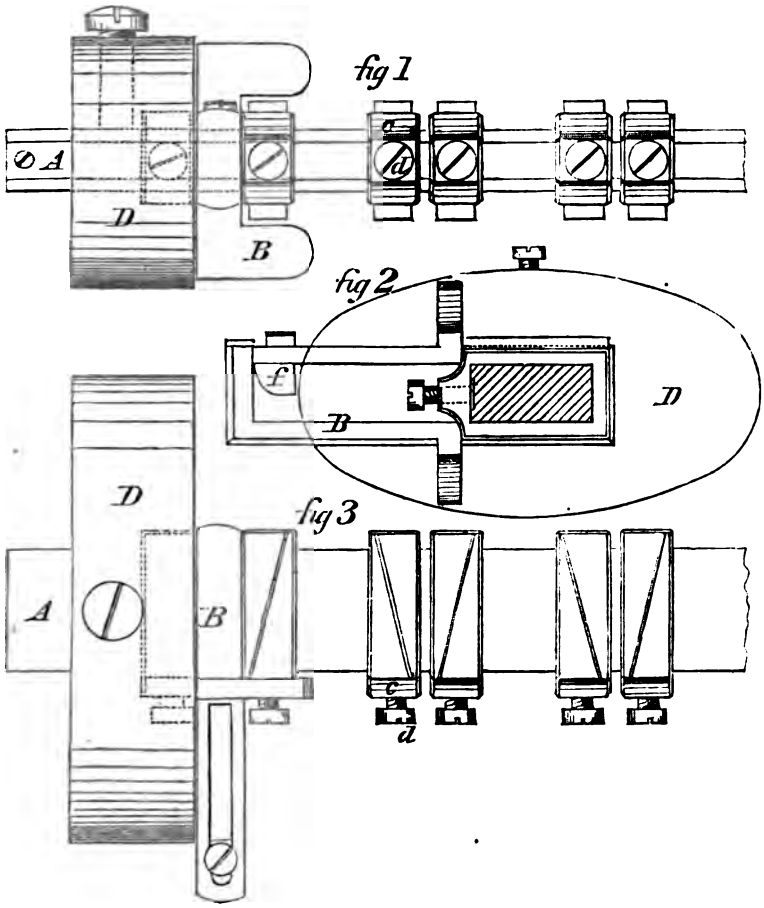

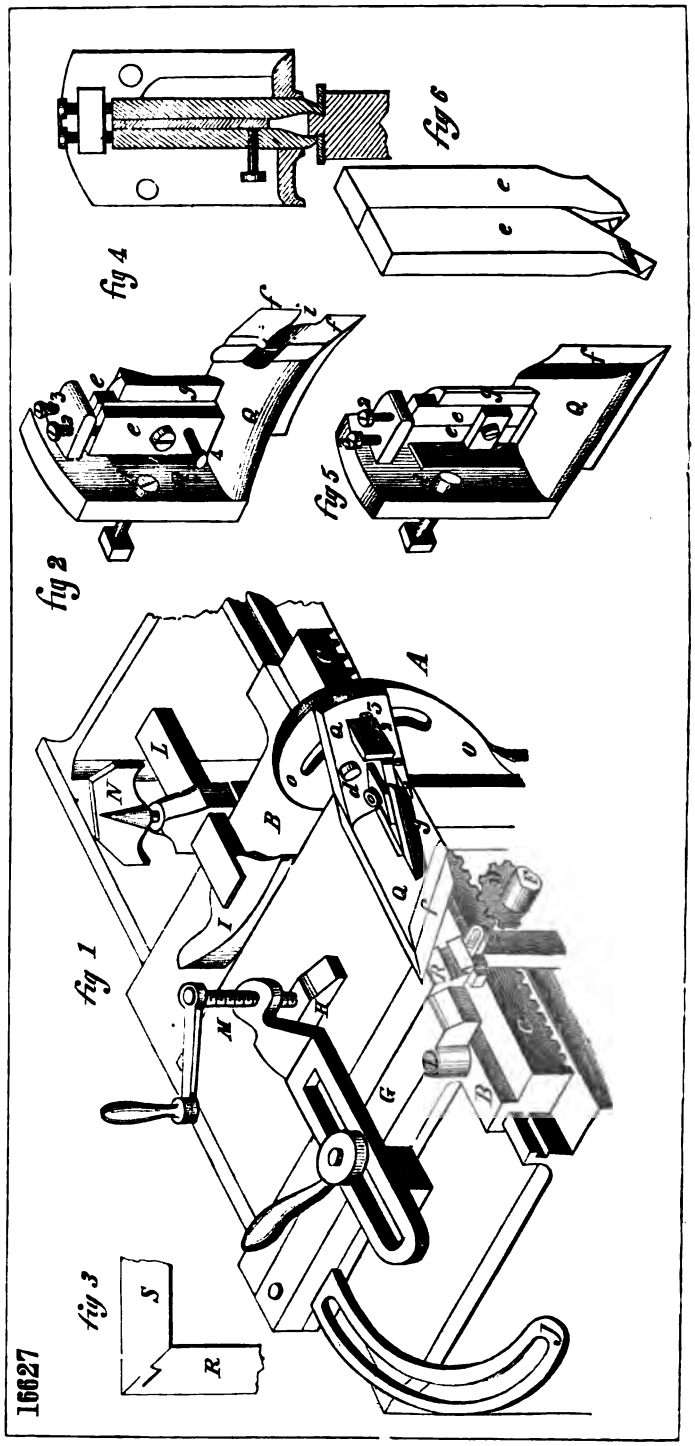
16627
fig 1
fig 2
fig 3
fig 4
fig 5
fig 6
A
B
G
M
S
R

16936

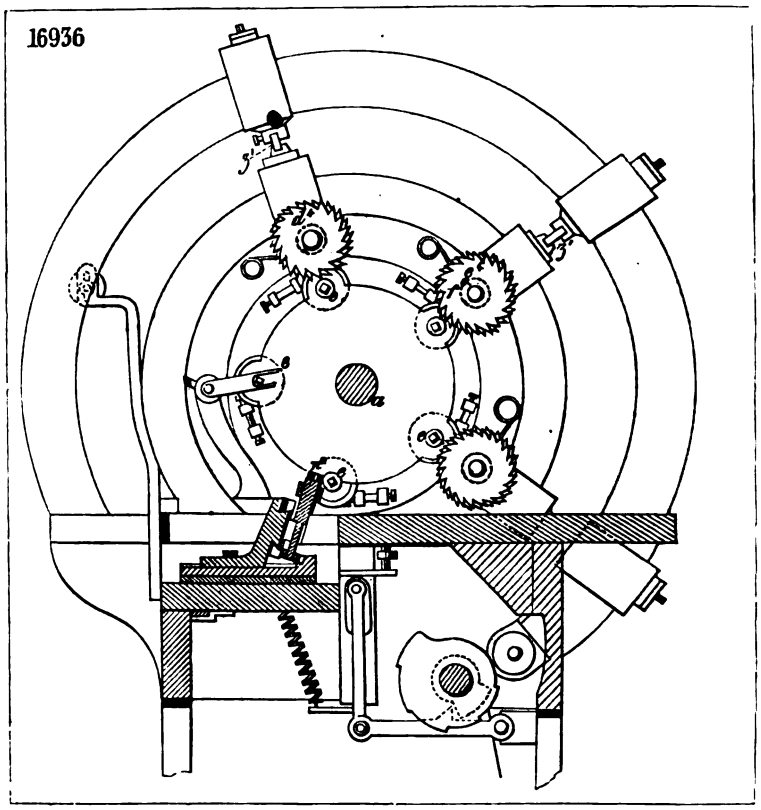

17403

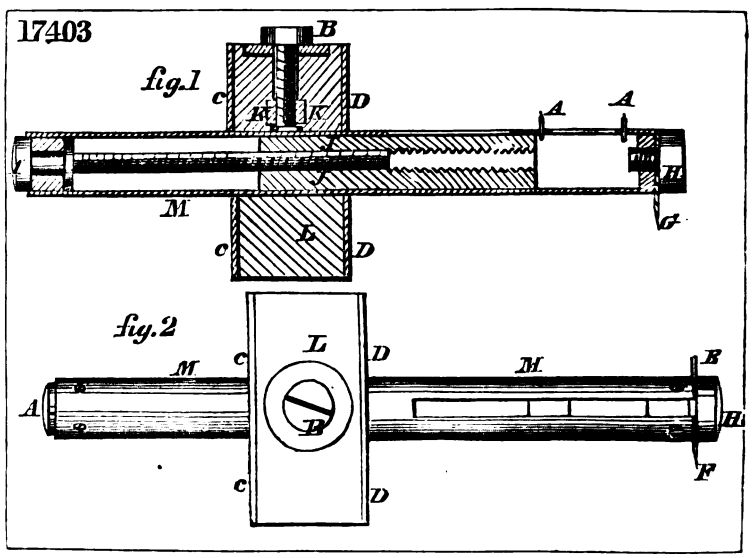

16816

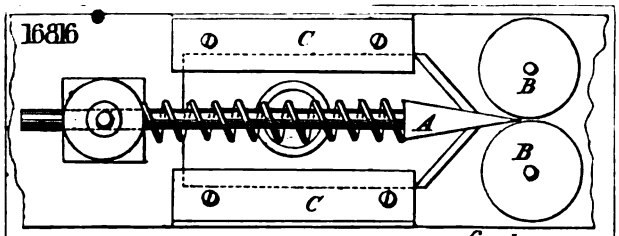

fig. 1

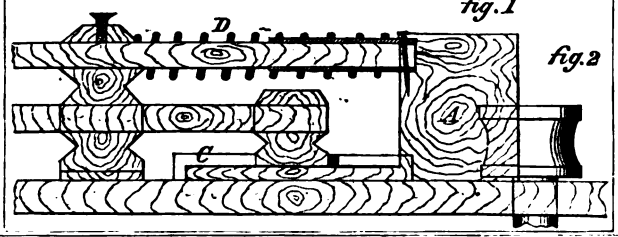

fig. 2

17014

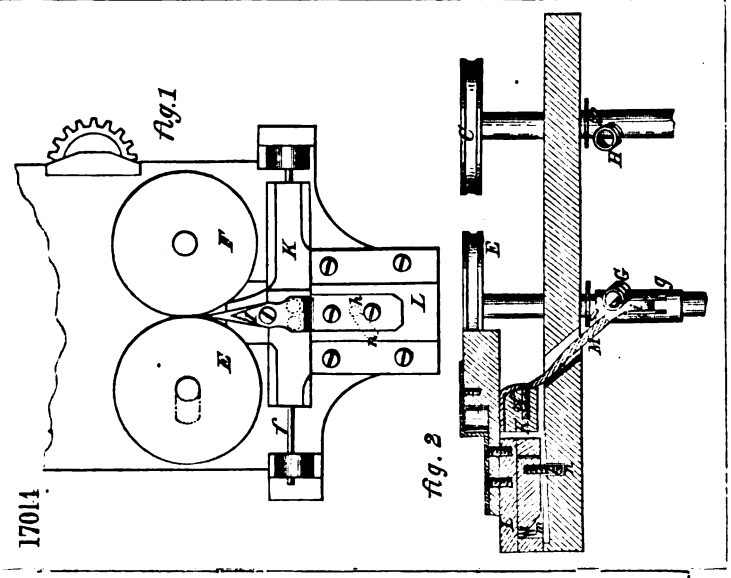

16932

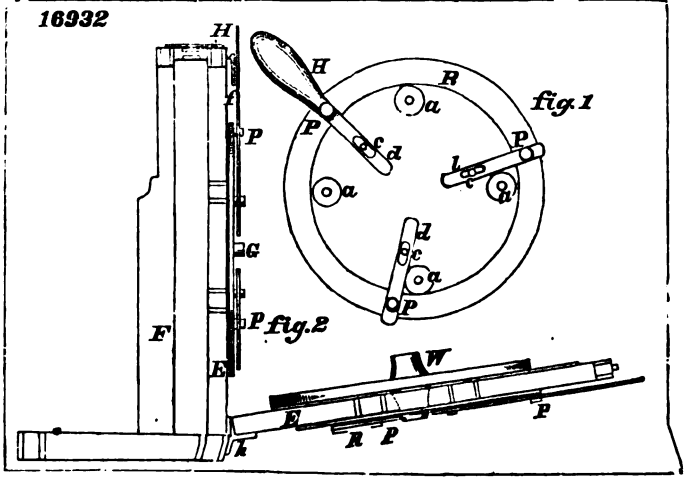

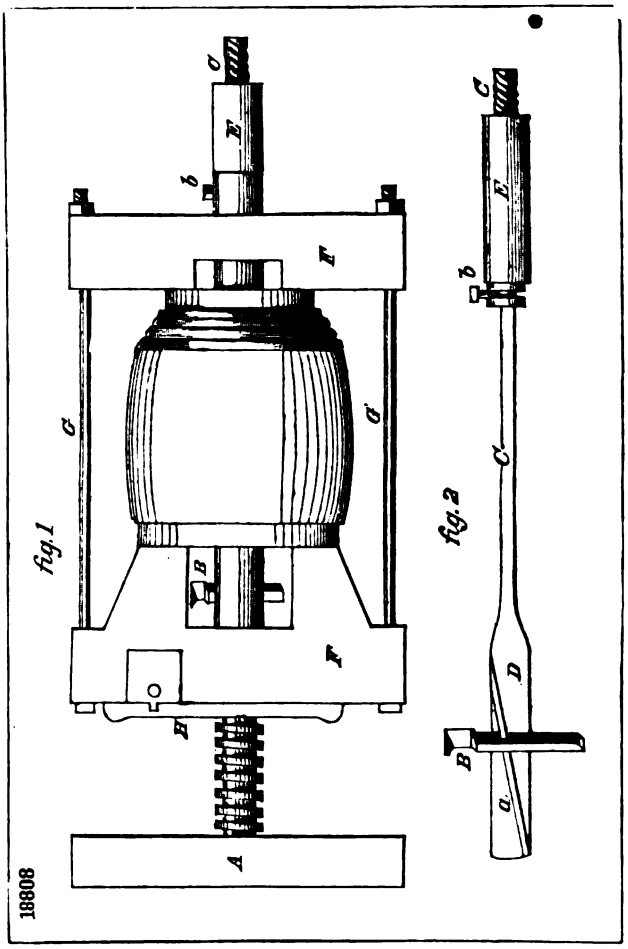
fig.1
fig.2
18808

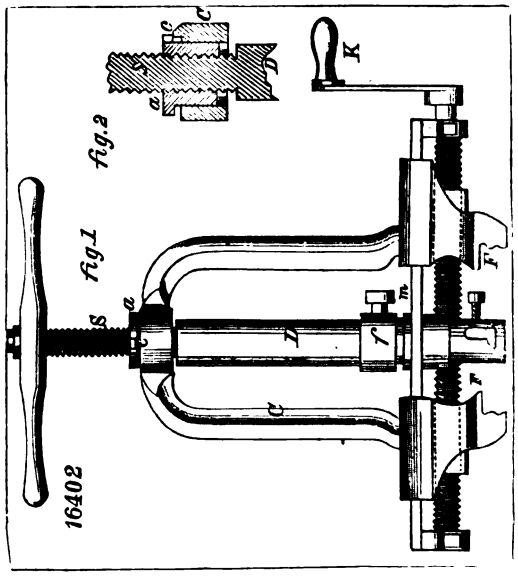
fig.1
fig.2
16402

17500

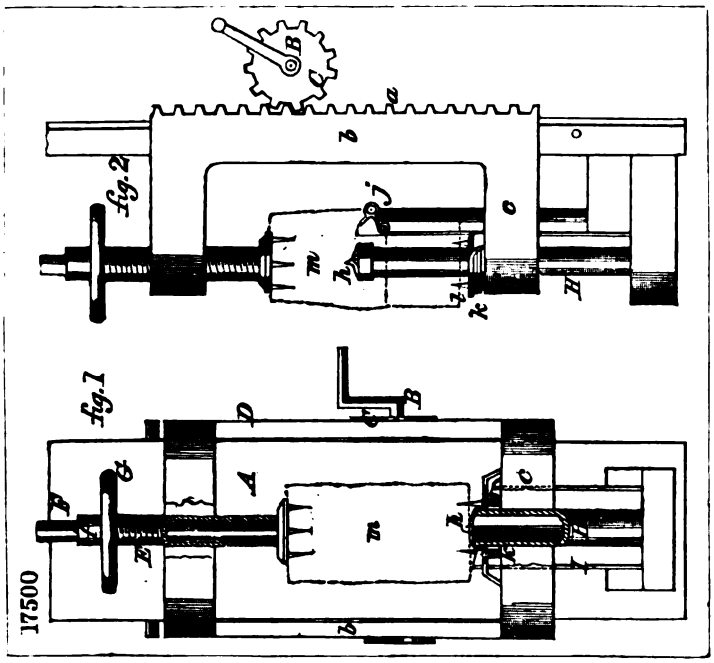

17735

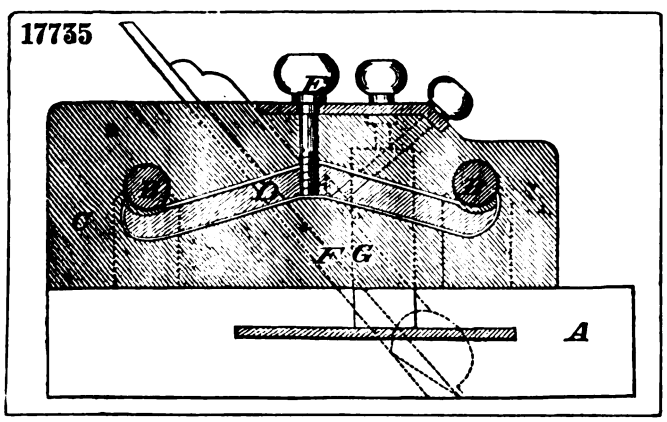

16557

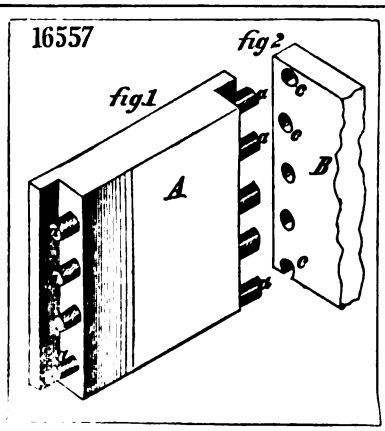

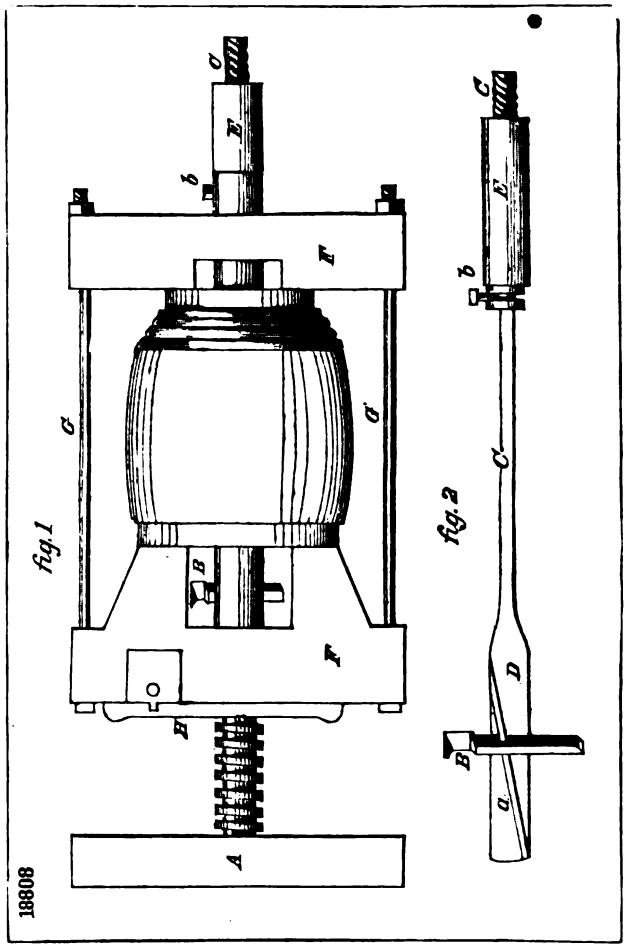
fig.1
fig.2
18808

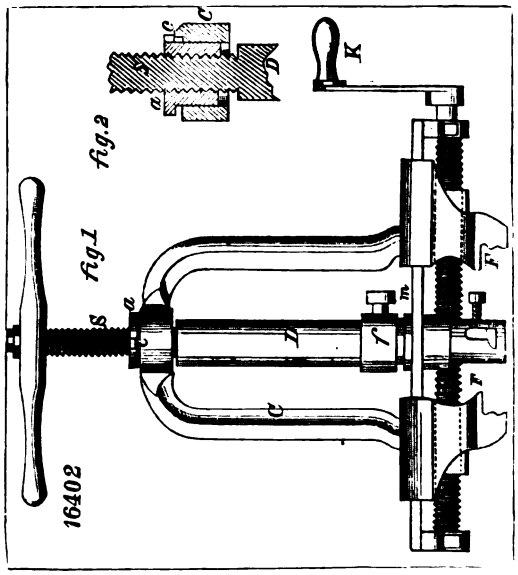
fig.1
fig.2
16402

17500

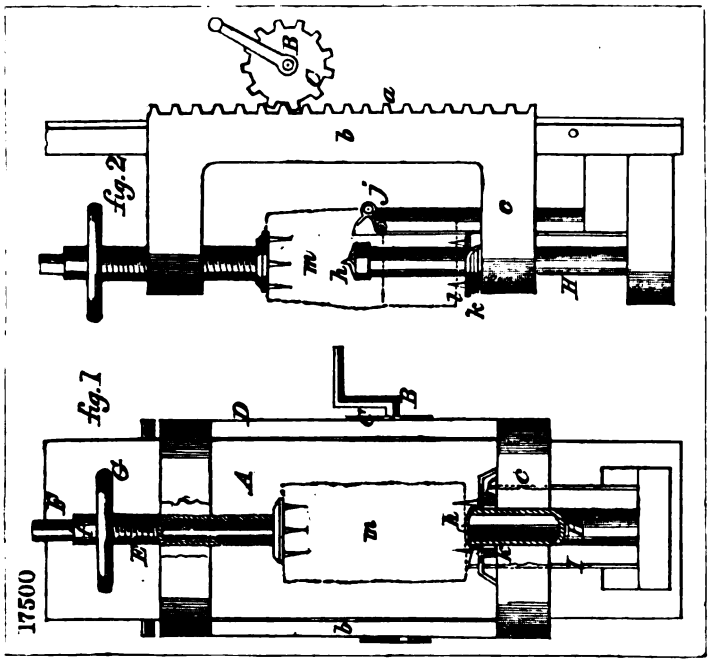

17735

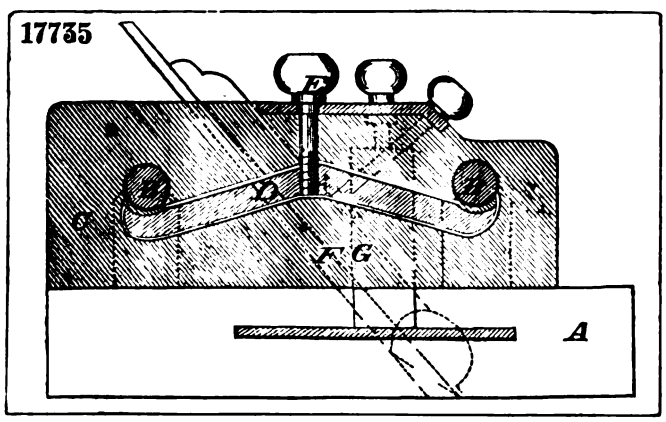

16557

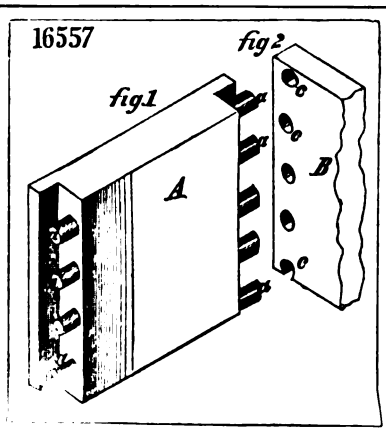

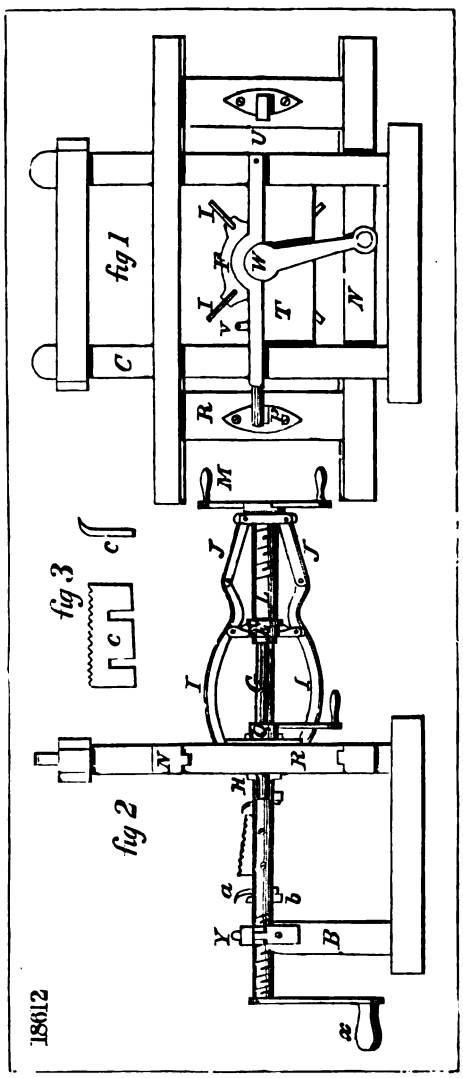
fig 1
fig 3
fig 2
18612

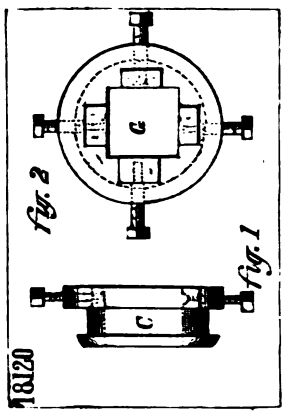
fig. 2
fig. 1
18120

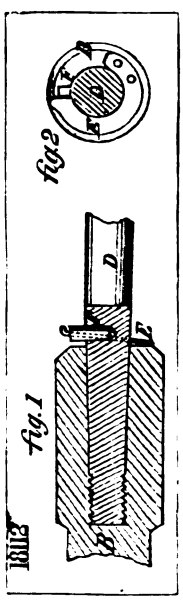
fig 2
fig 1
18127

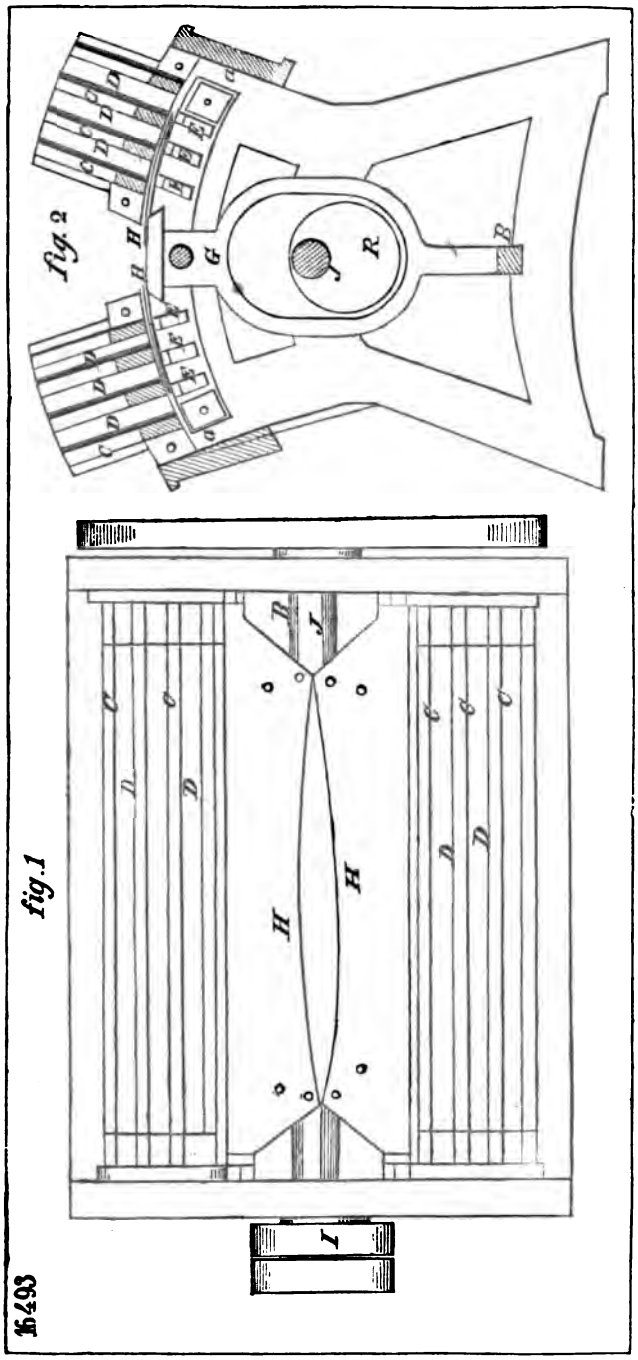
fig. 2
fig. 1
16493

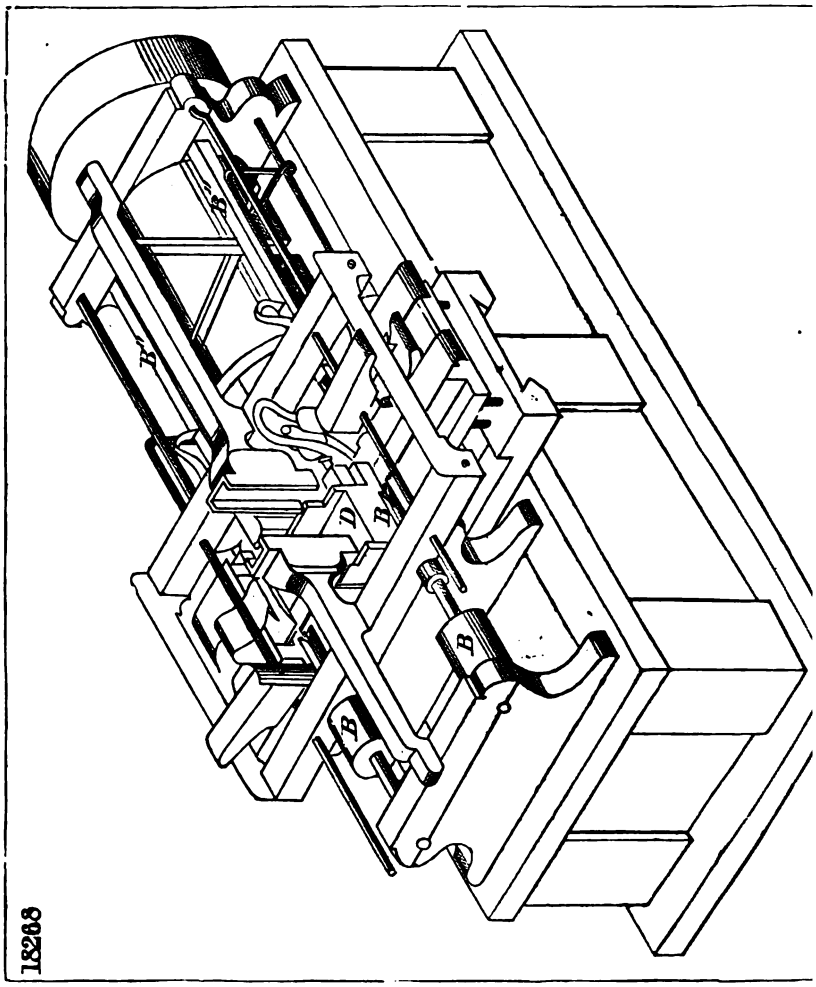

18263

17494

Fig 1

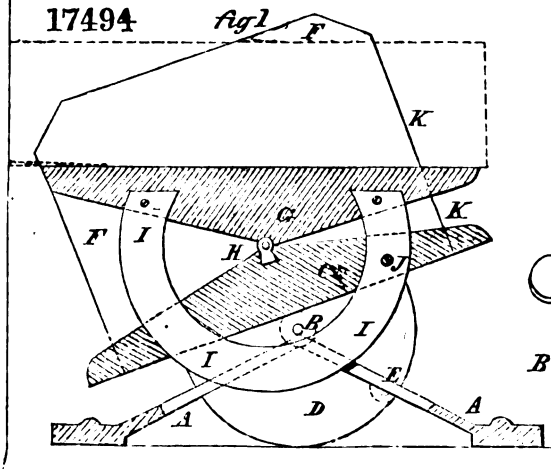

Fig. 2

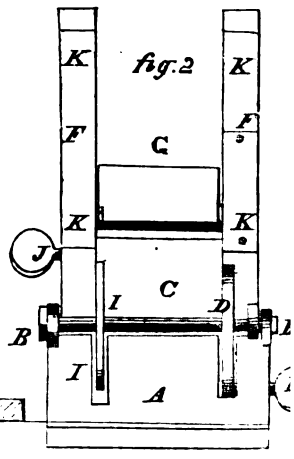

17762

fig 1

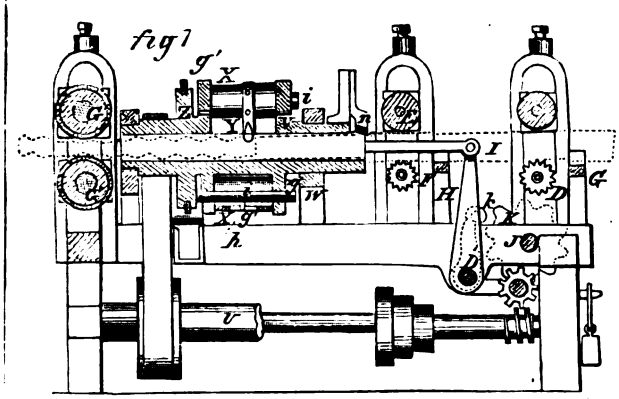

fig 2

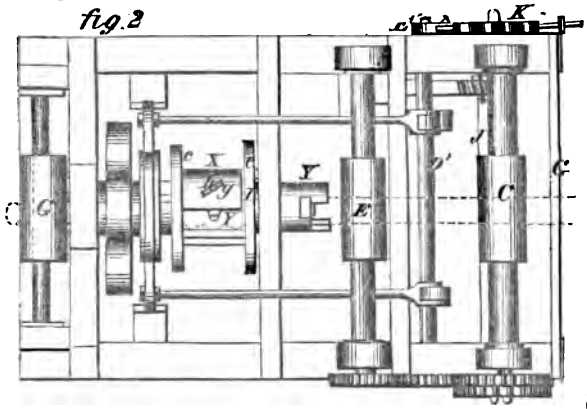

fig 3

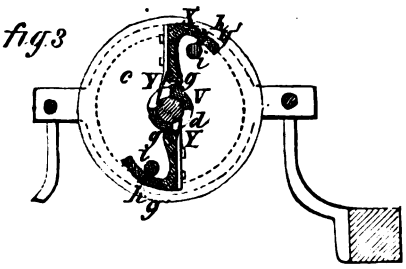

17285

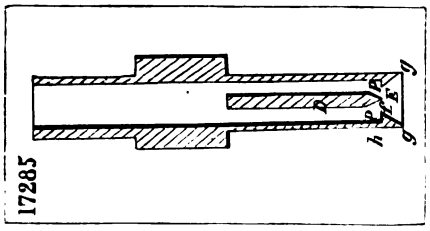

17866

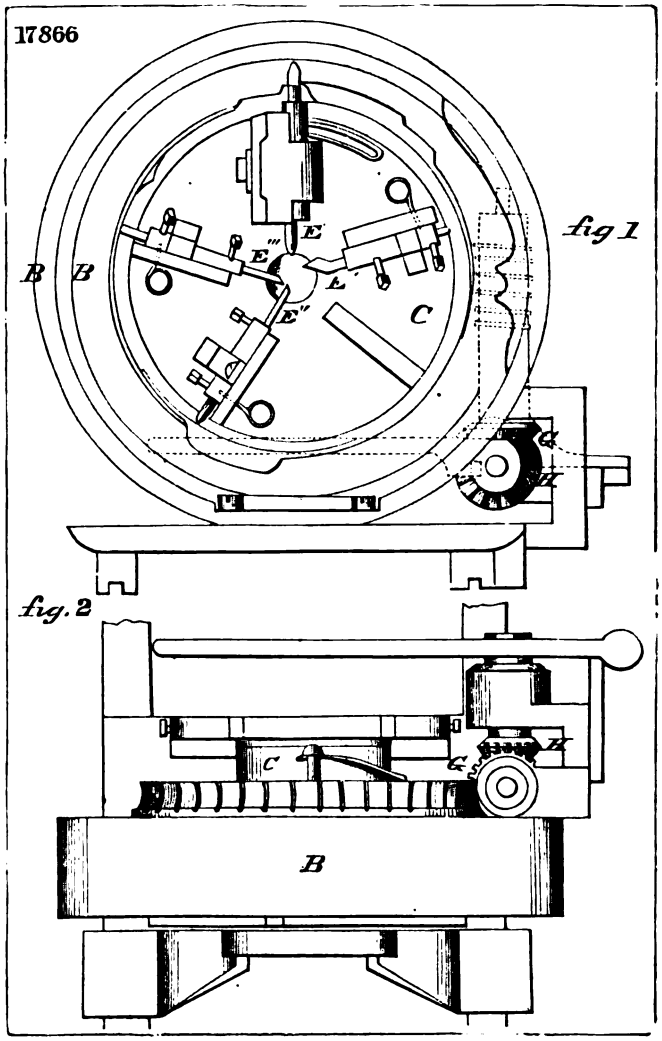

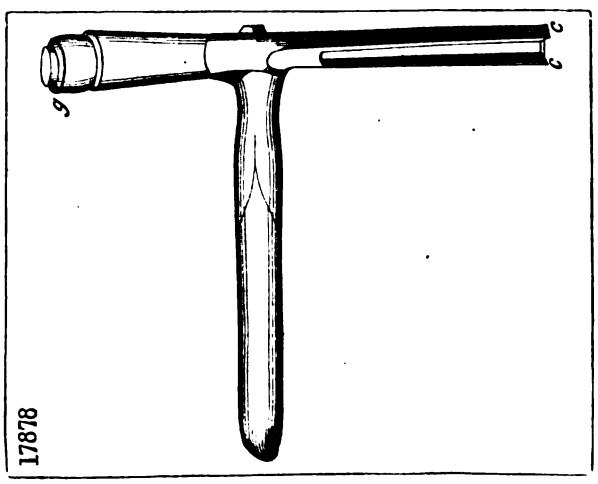

17878

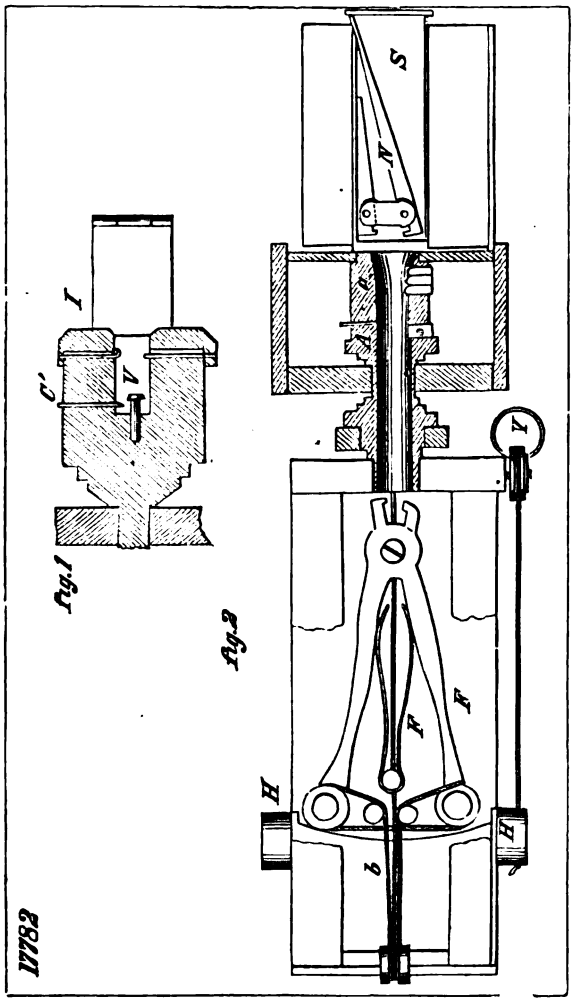
fig.1
fig.2
17782

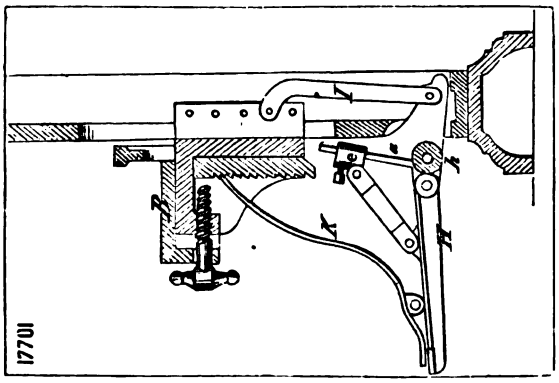
17701

17313

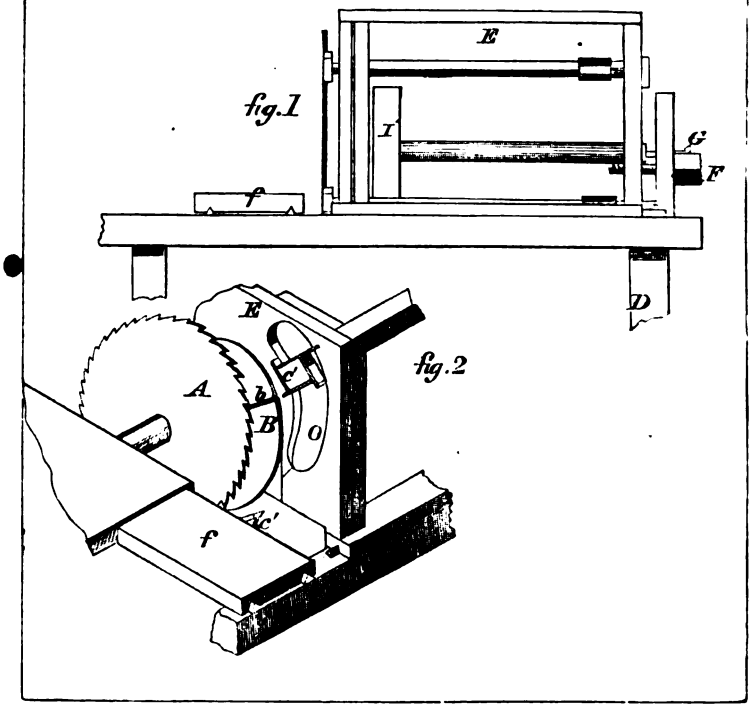

16552

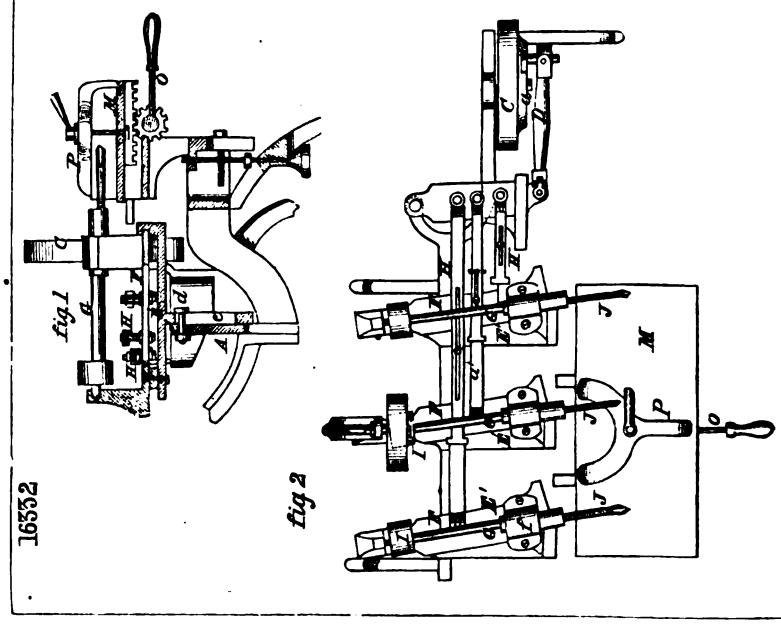

18521

fig 1

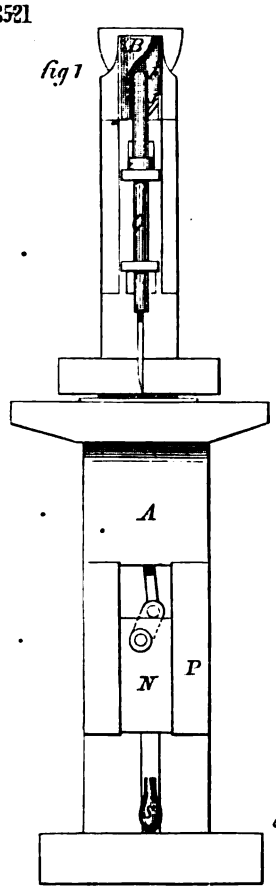

fig 2

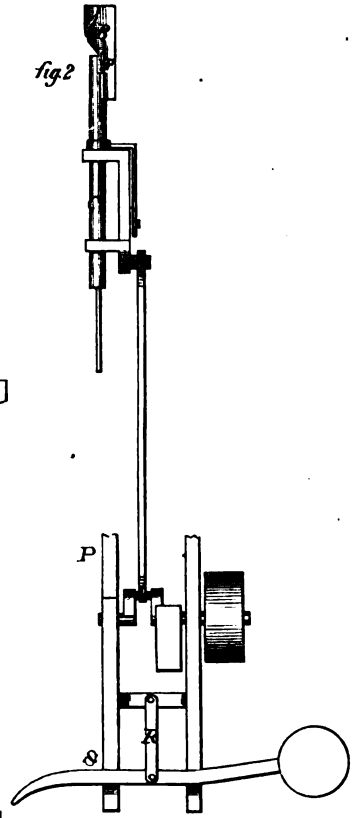

18977

fig 2

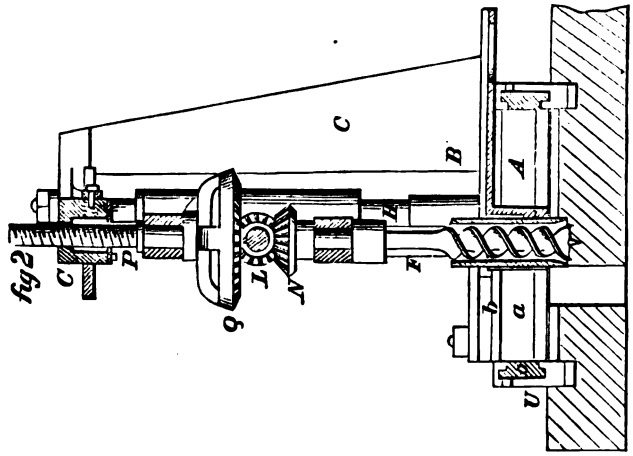

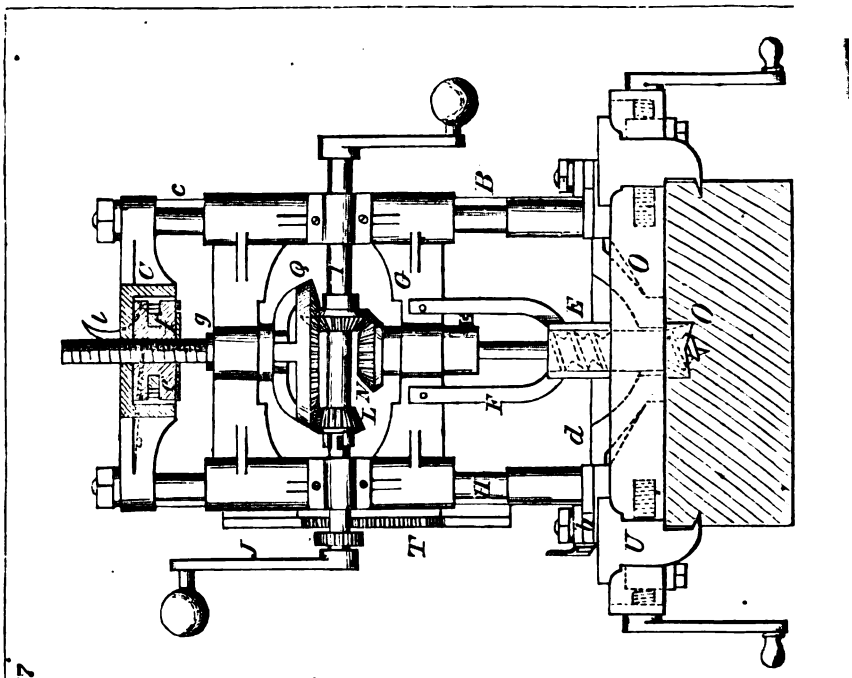
18977

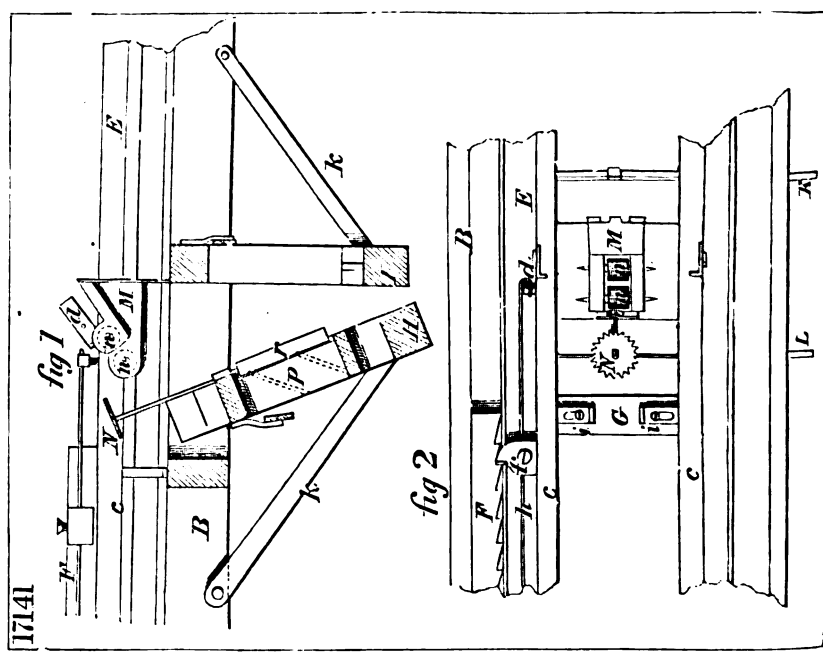
17141
fig 1
fig 2

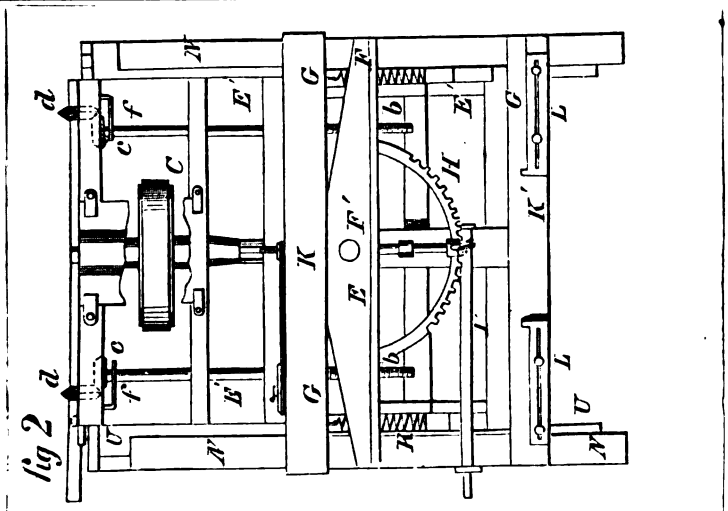

fig 2

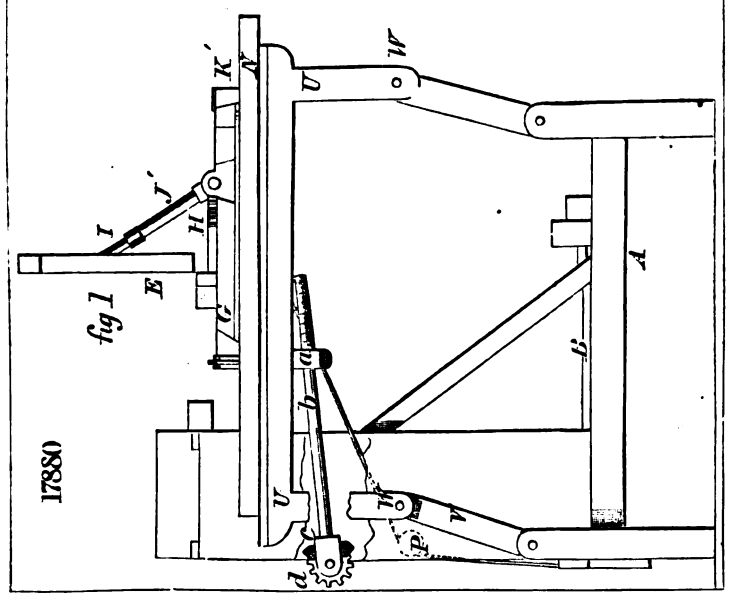

fig 1

17880

541

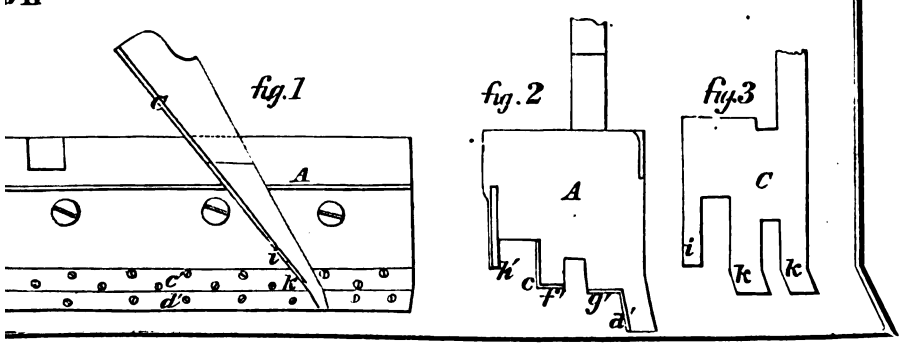

18535

fig 1

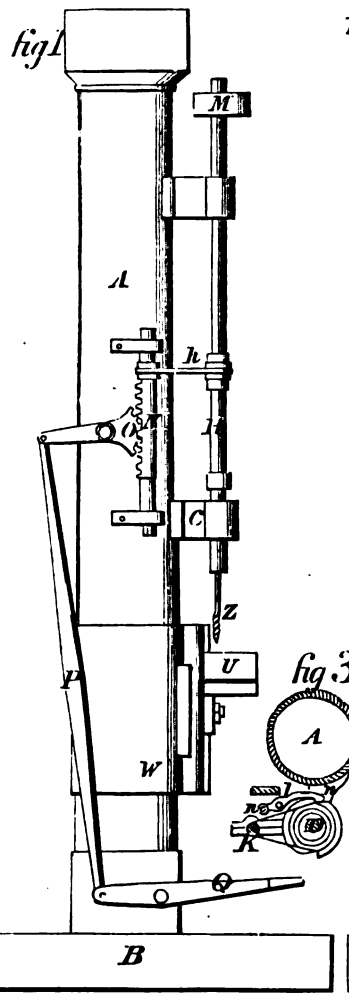

fig 2

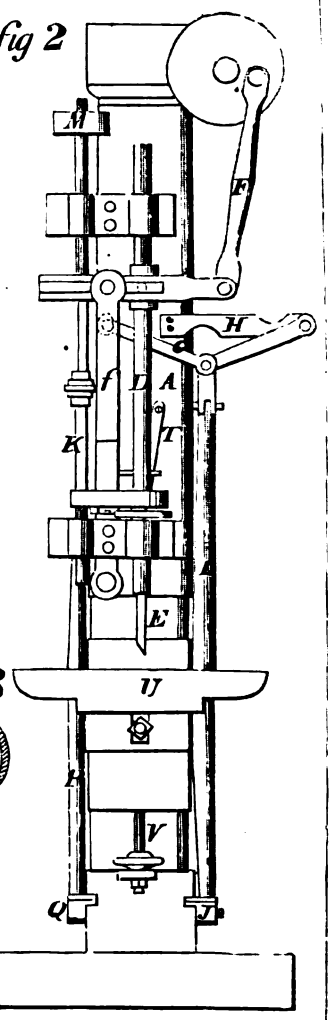

fig 3

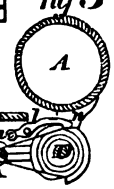

16889

fig 1

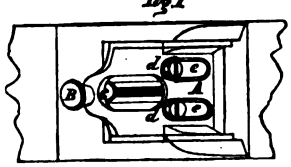

fig 2

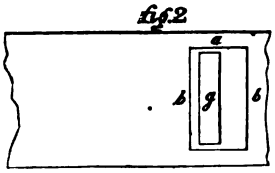

fig 4

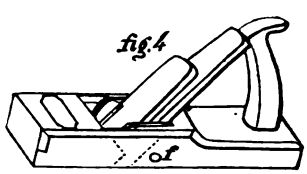

fig 3

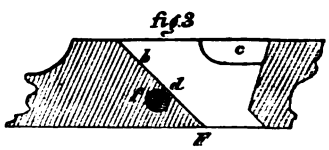

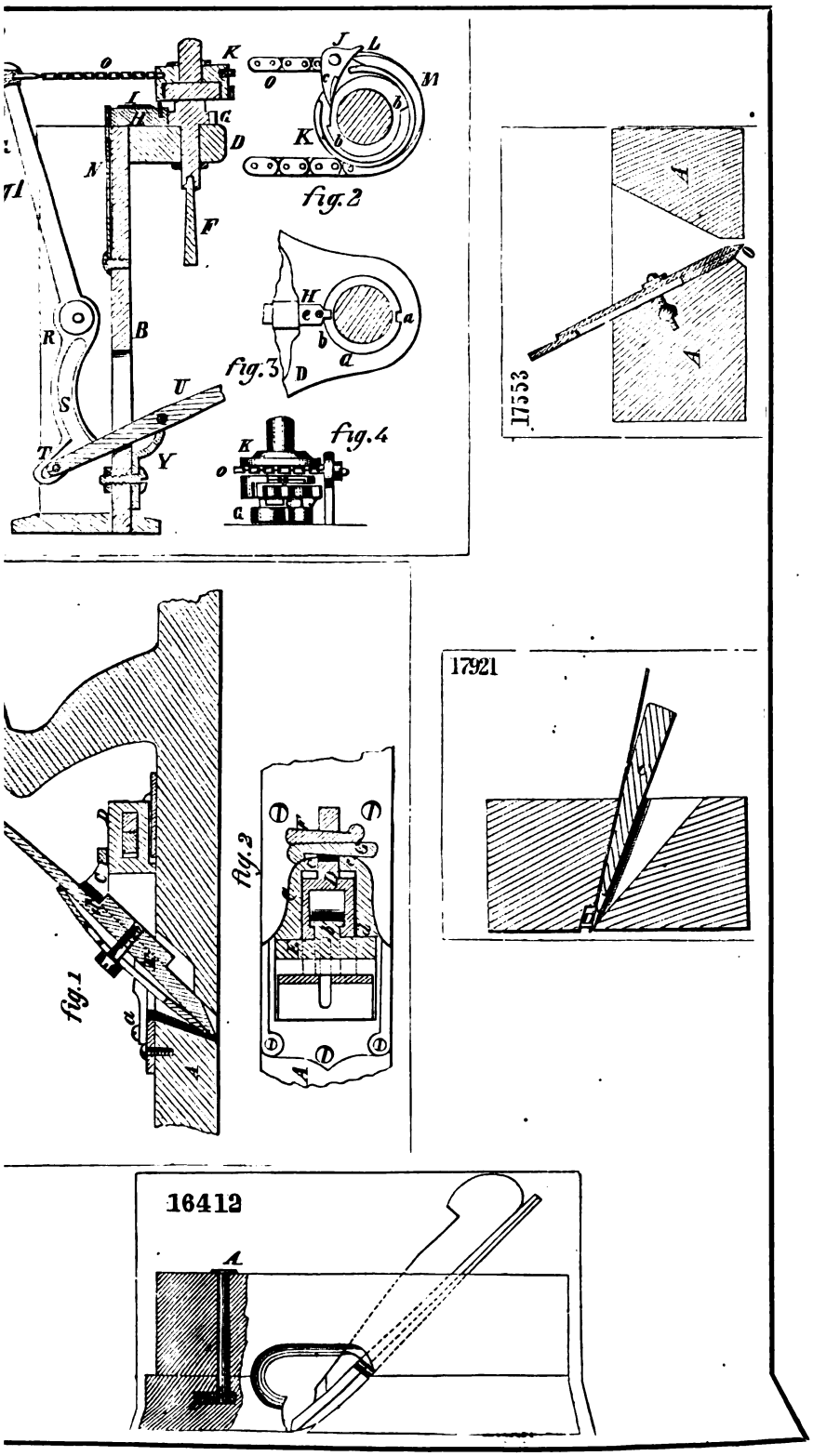
fig. 2
fig. 3
fig. 4
17553
17921
fig. 1
fig. 2
16412

17965

fig.1

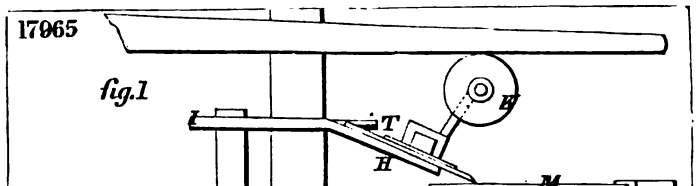

fig.2

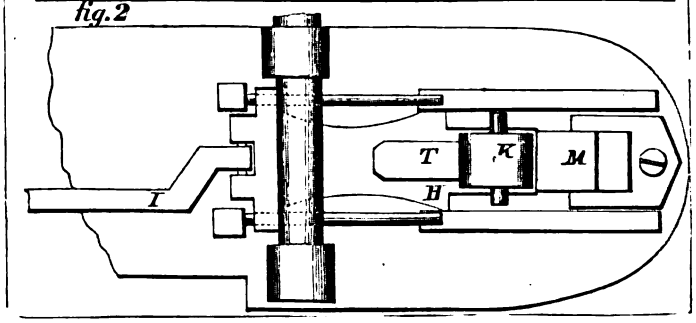

16805

fig.1

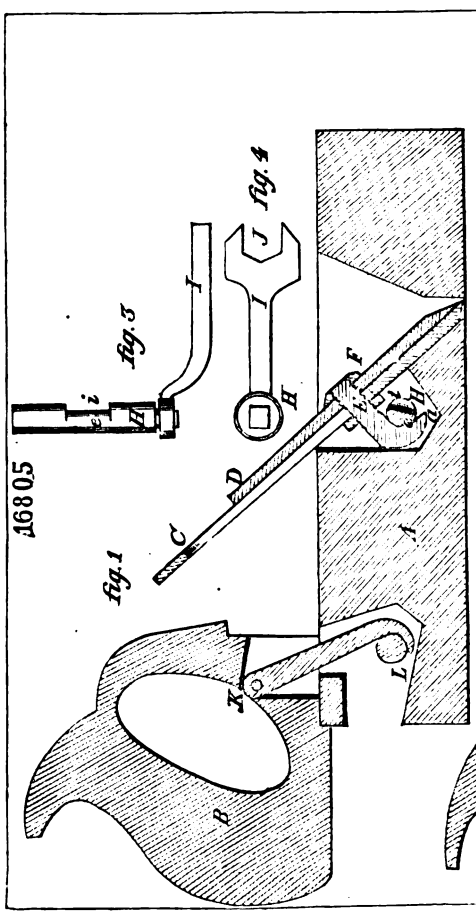

fig.3

fig.4

fig.2

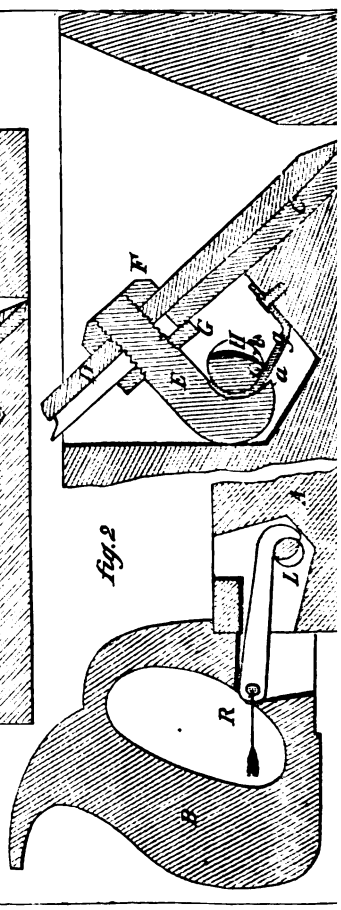

17618

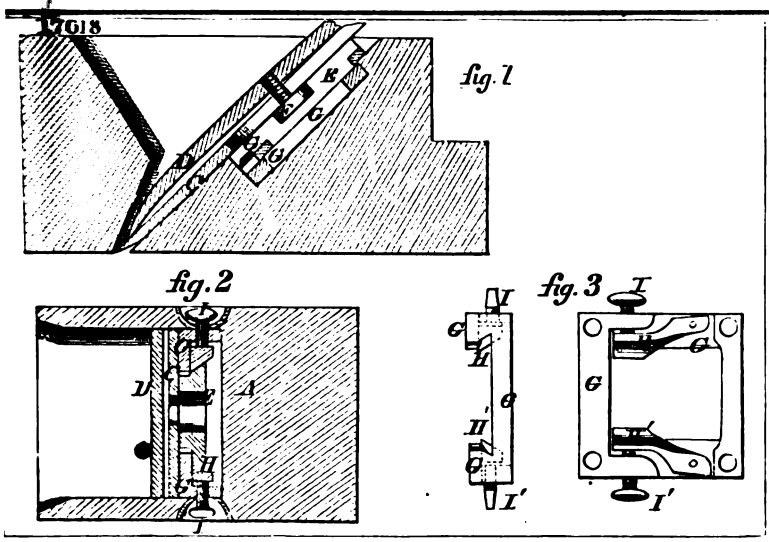

9

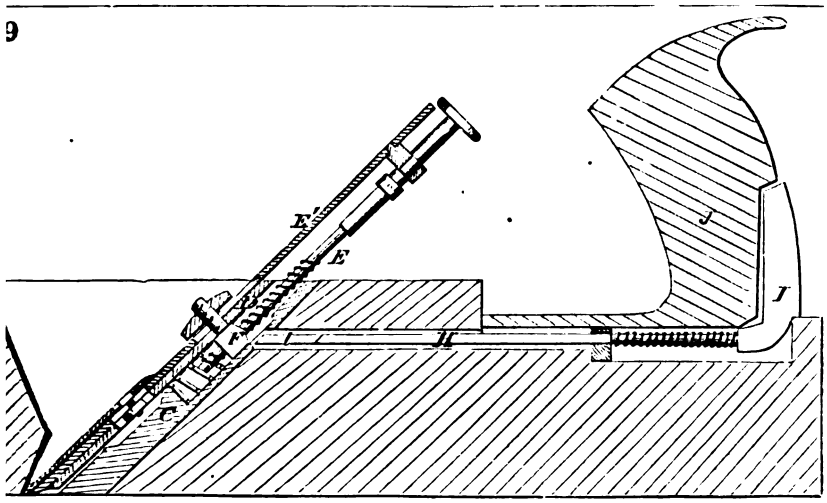

18312

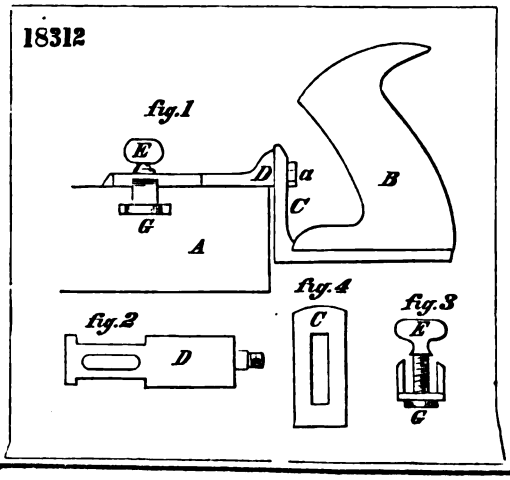

17645

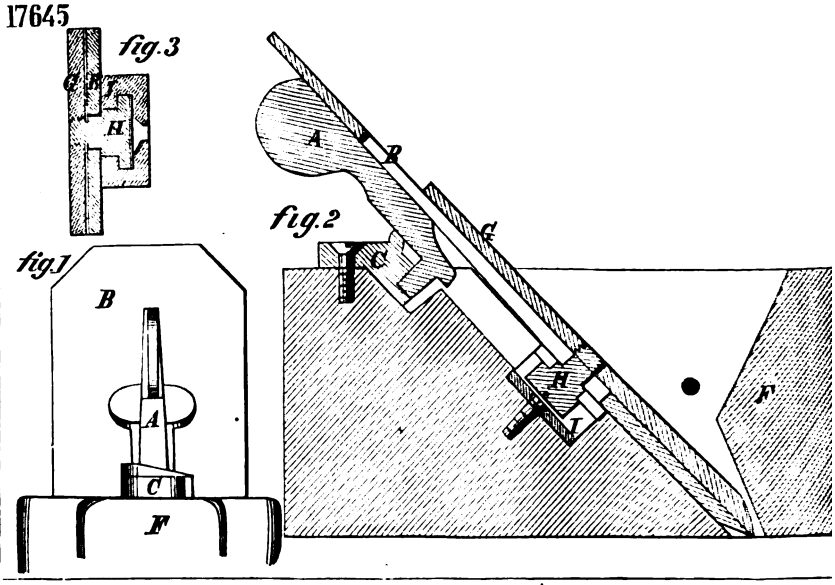
fig.3
G
H
fig.1
B
A
C
F
fig.2
A
B
G
C
H
I
F

16954

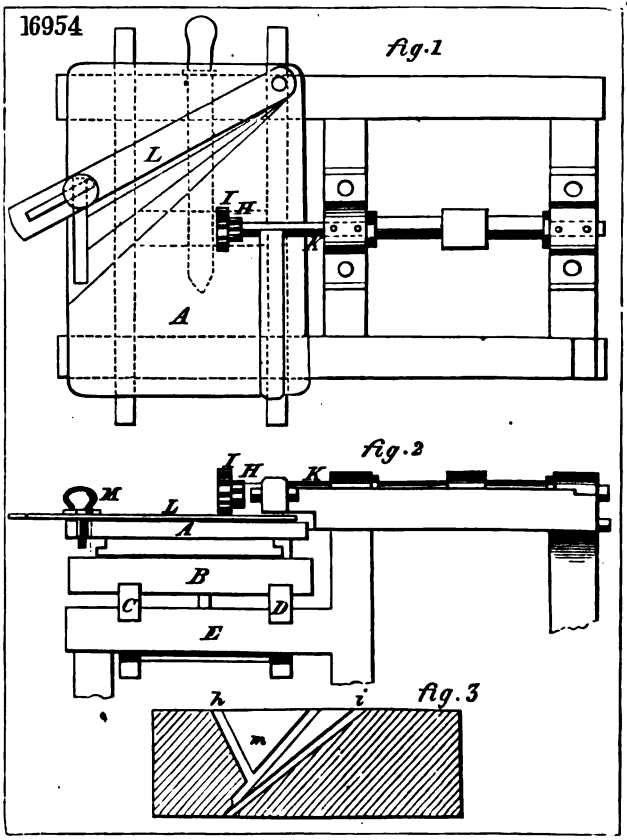
fig.1
L
I
H
K
A
fig.2
I
H
K
M
L
A
B
C
D
E
fig.3
h
i
m

17332

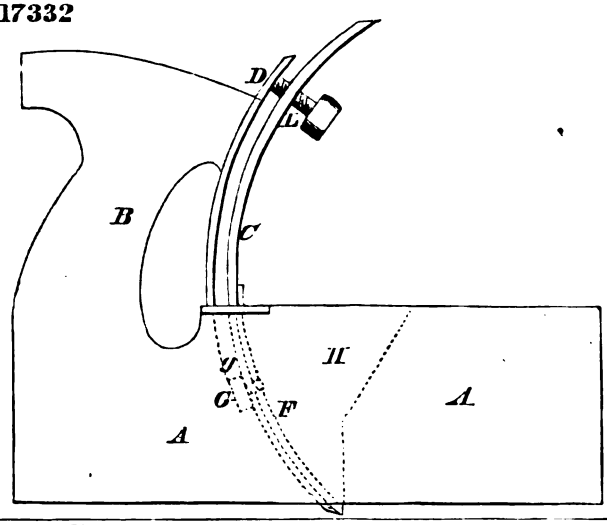

17951

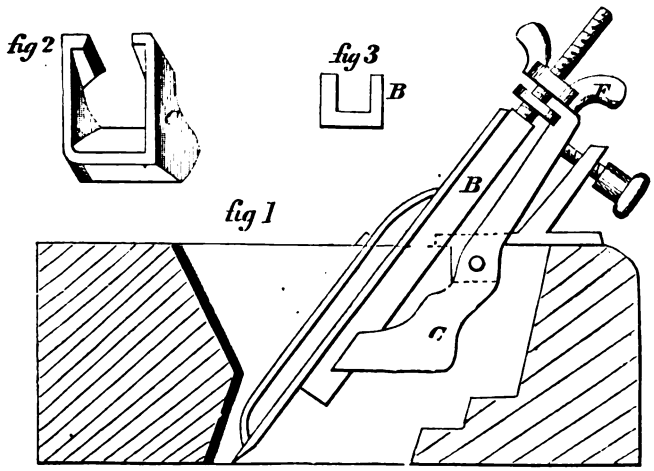

17286

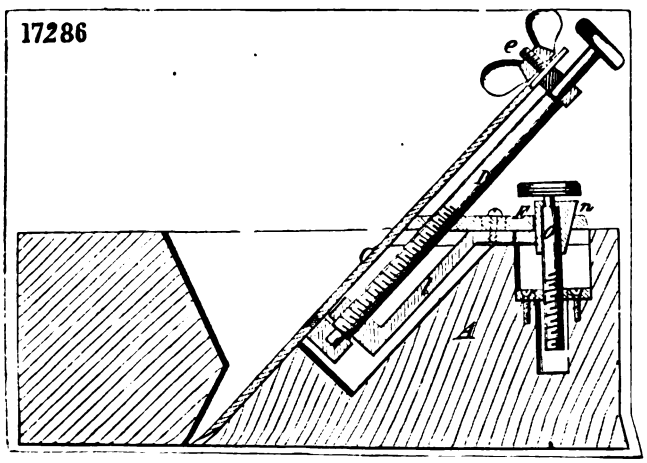

17300

fig 1

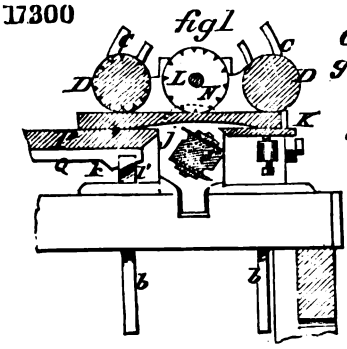

fig 2

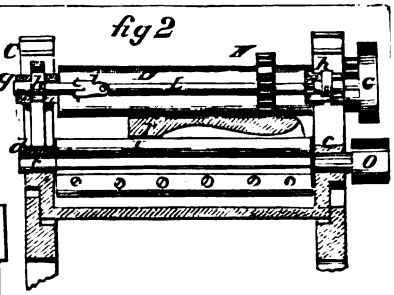

17343

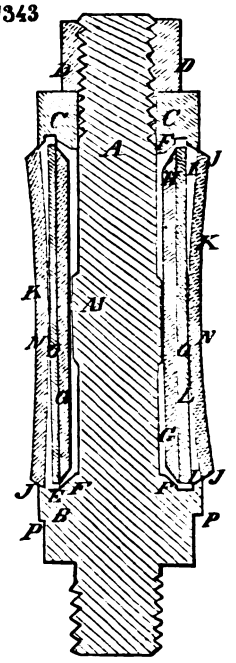

17171

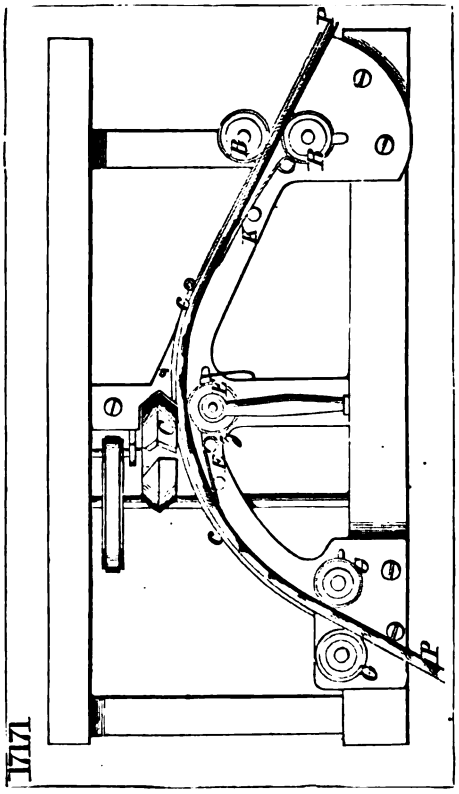

18007

fig 1

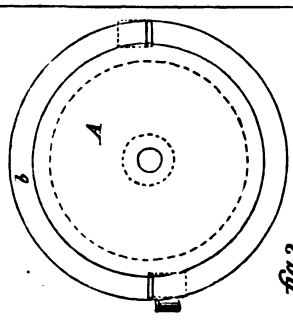

fig 2

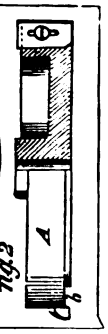

16513

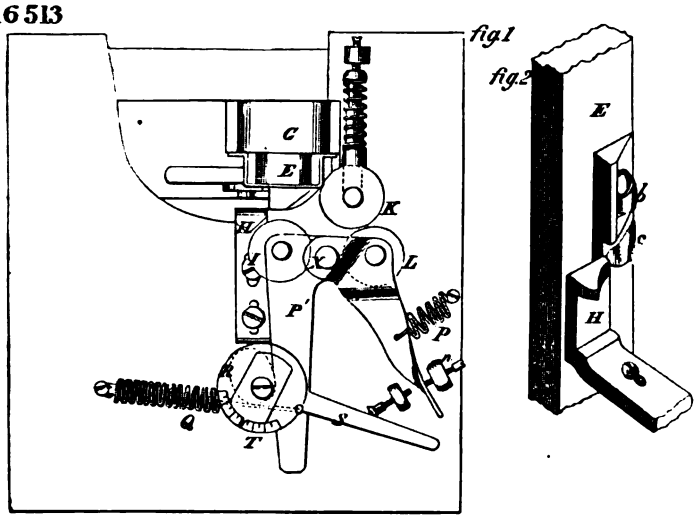

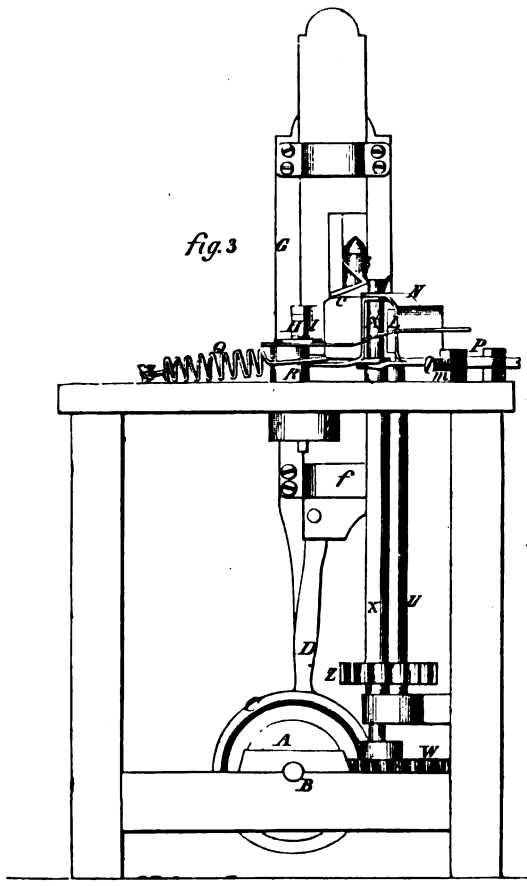

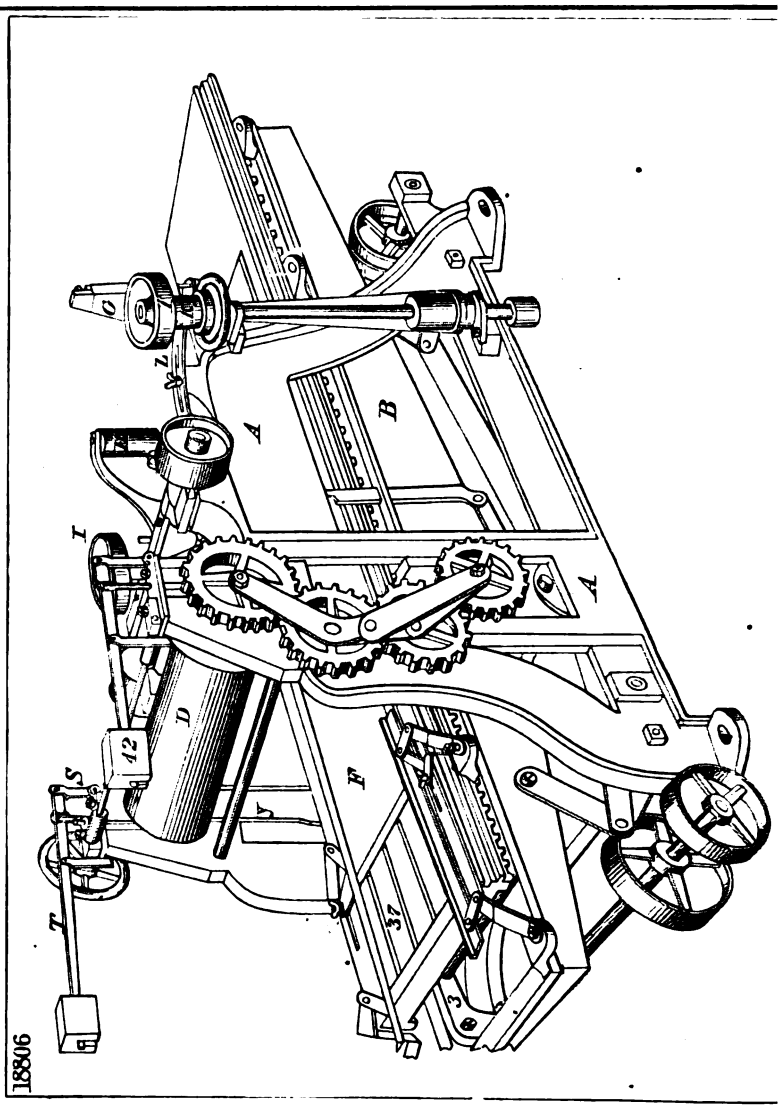
18806
A
B
D
F
I
S
T
42
37
3

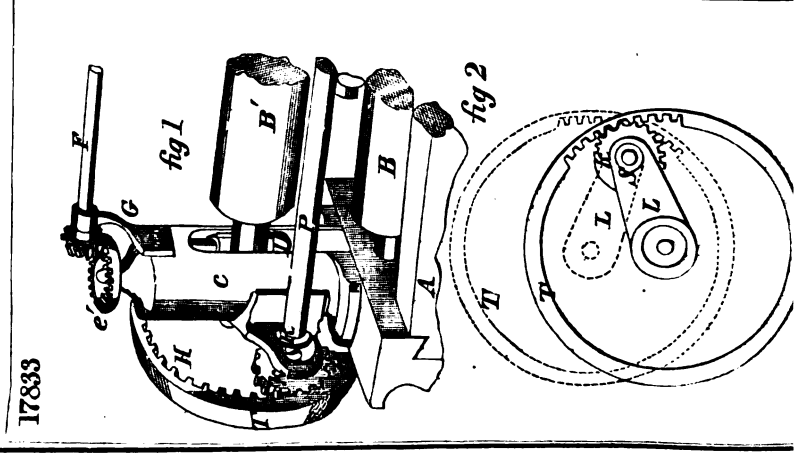
17833
fig 1
fig 2
F
G
B'
B
C
A
H
T
L

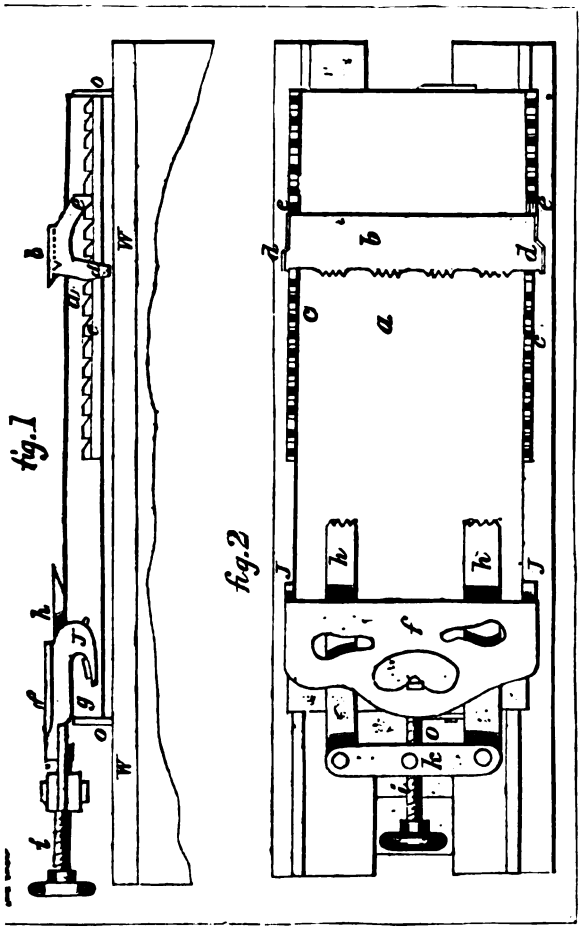

17873

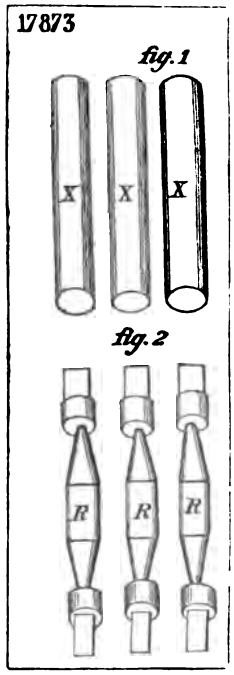

17963

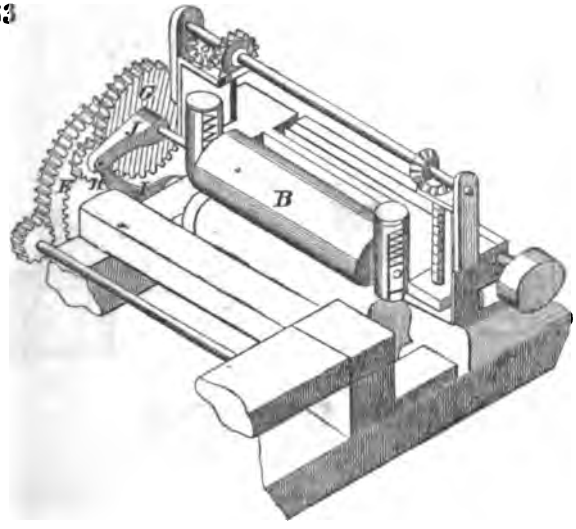

16403

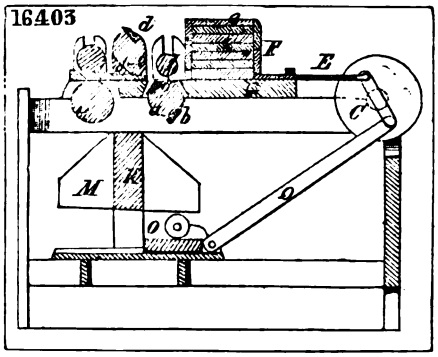

18089

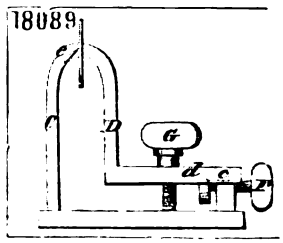

16427

fig. 1

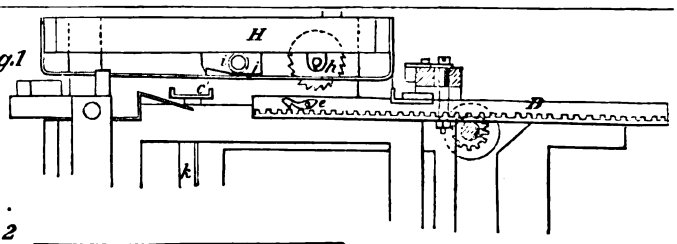

fig. 2

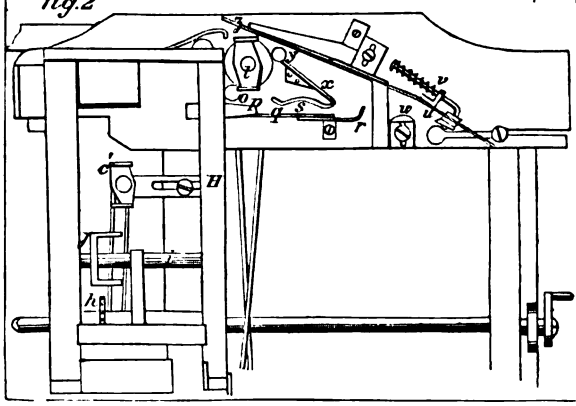

18415

fig. 1

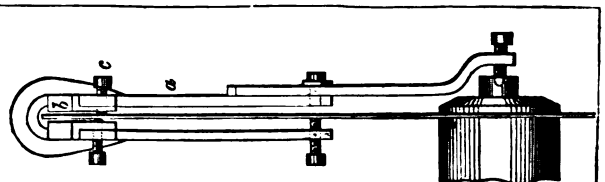

fig. 2

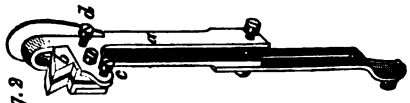

24

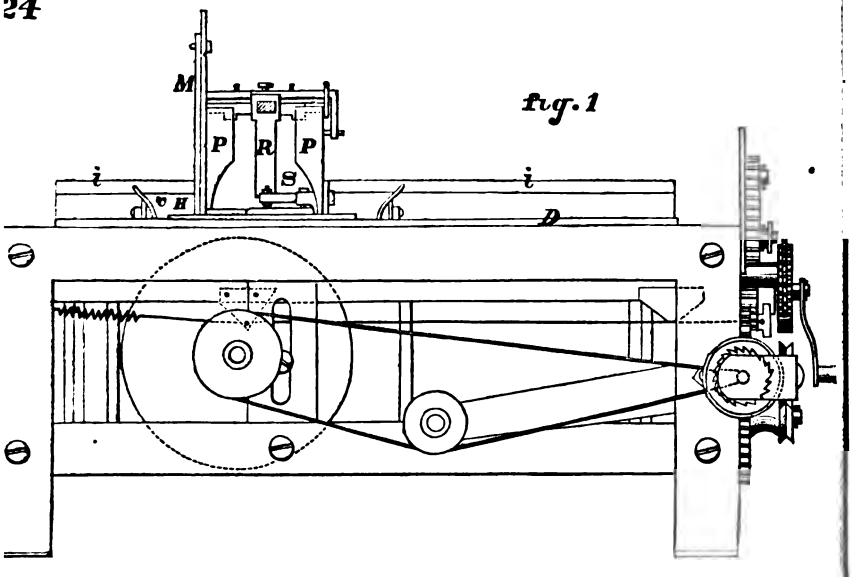

fig. 1

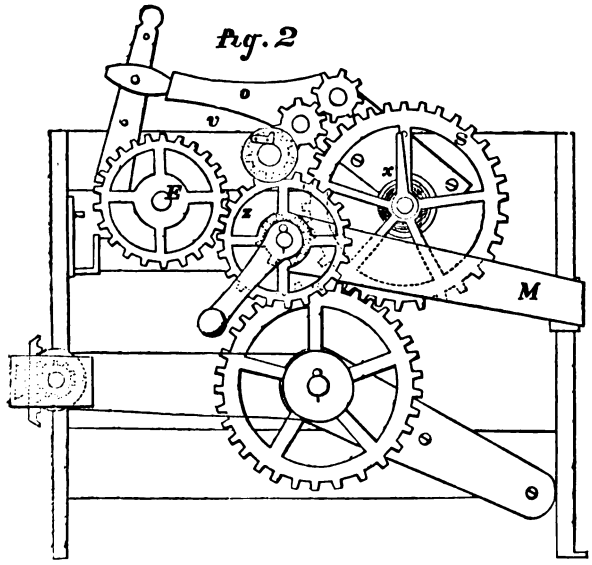

fig. 2

18378

fig.2

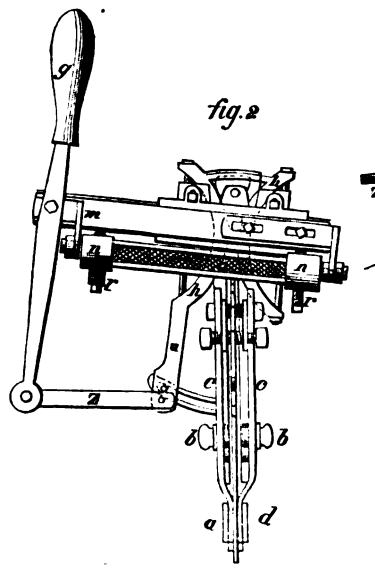

fig.1

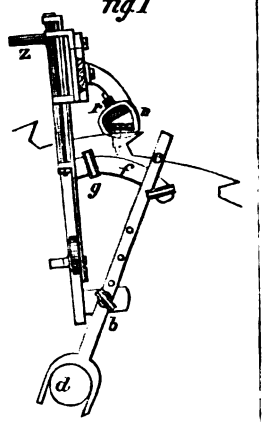

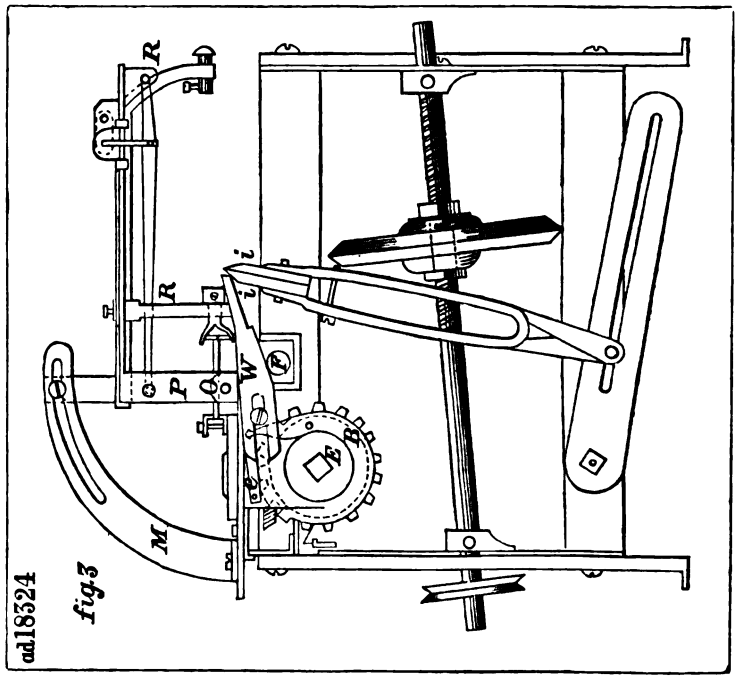

ad18324

fig.3

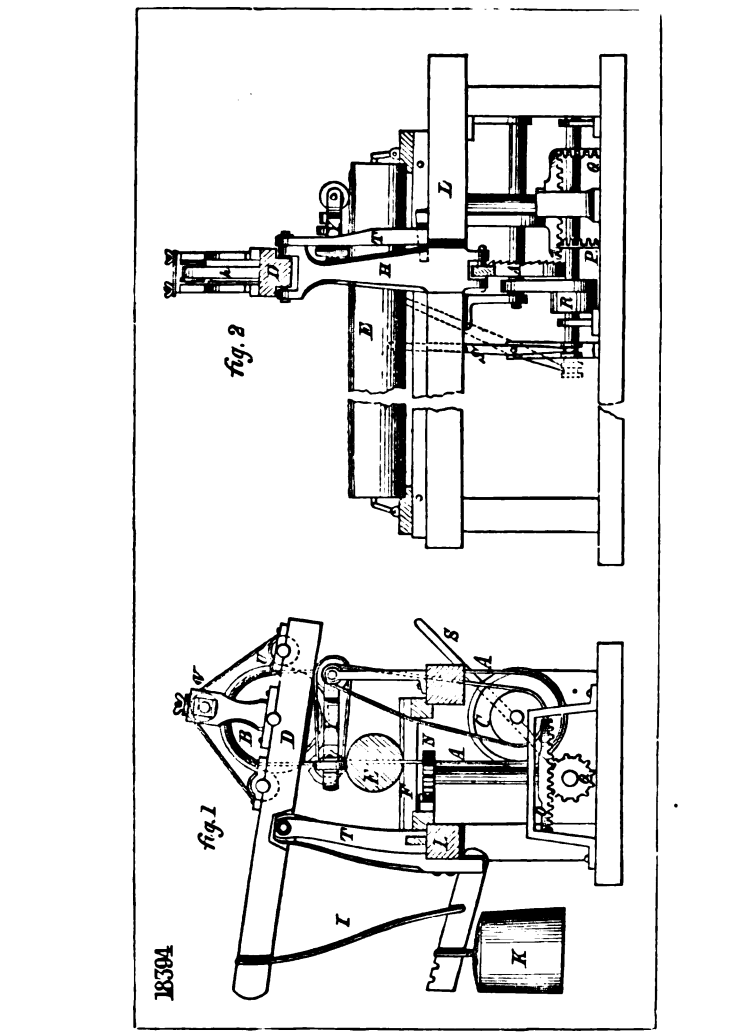
18394
fig. 1
fig. 2

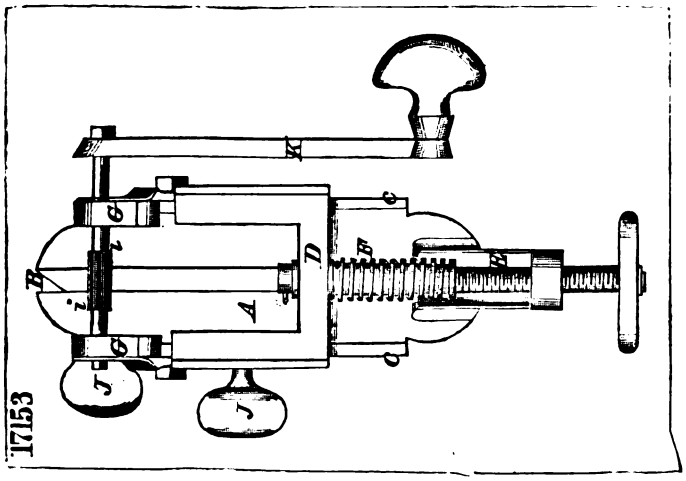
17153

17537

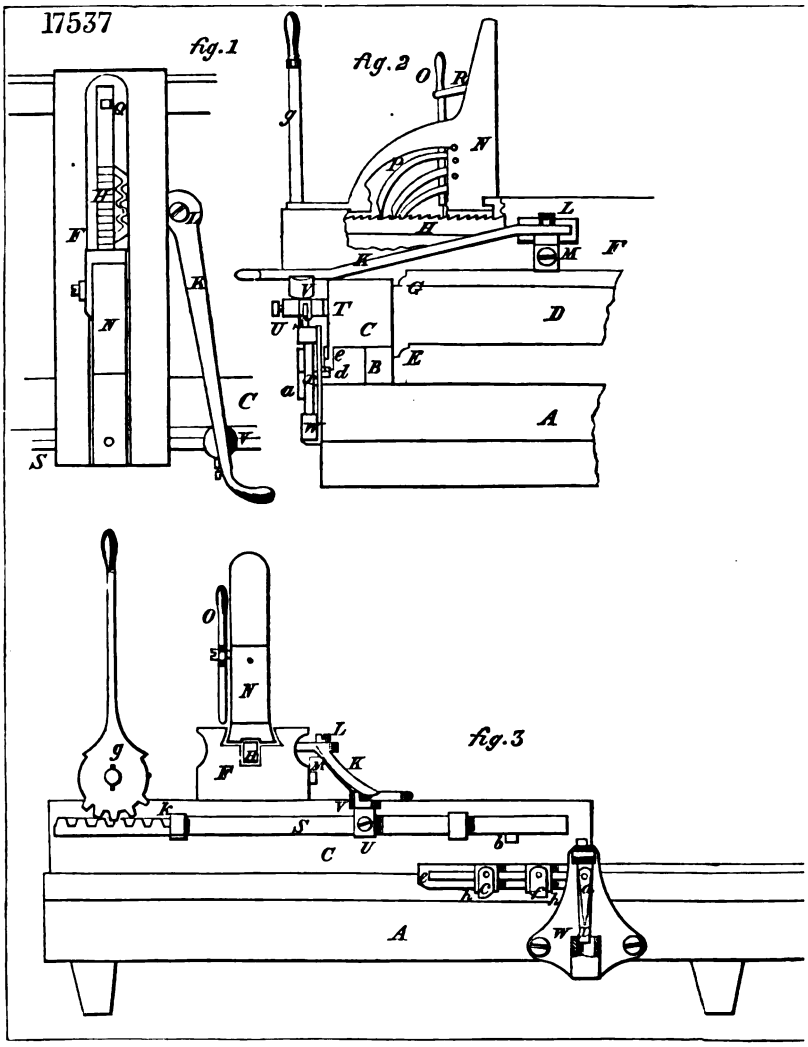

18474

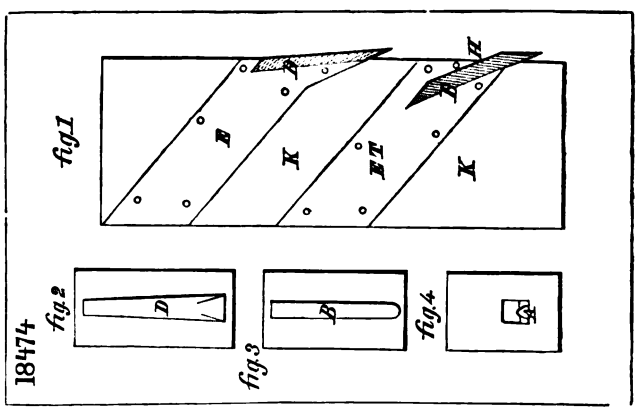

17099

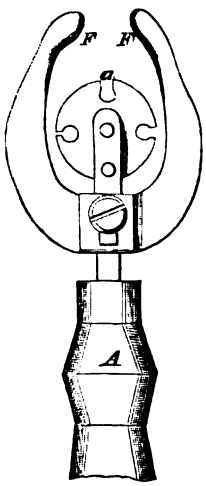

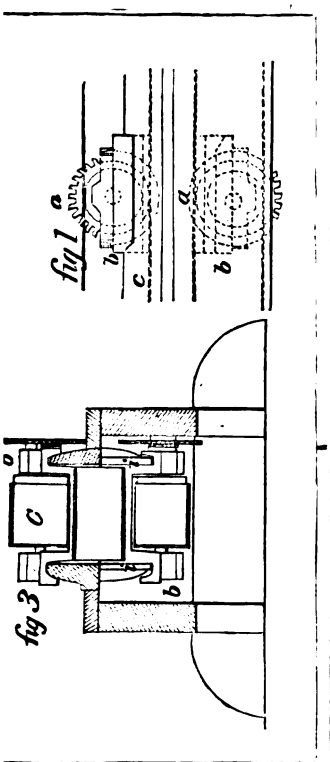

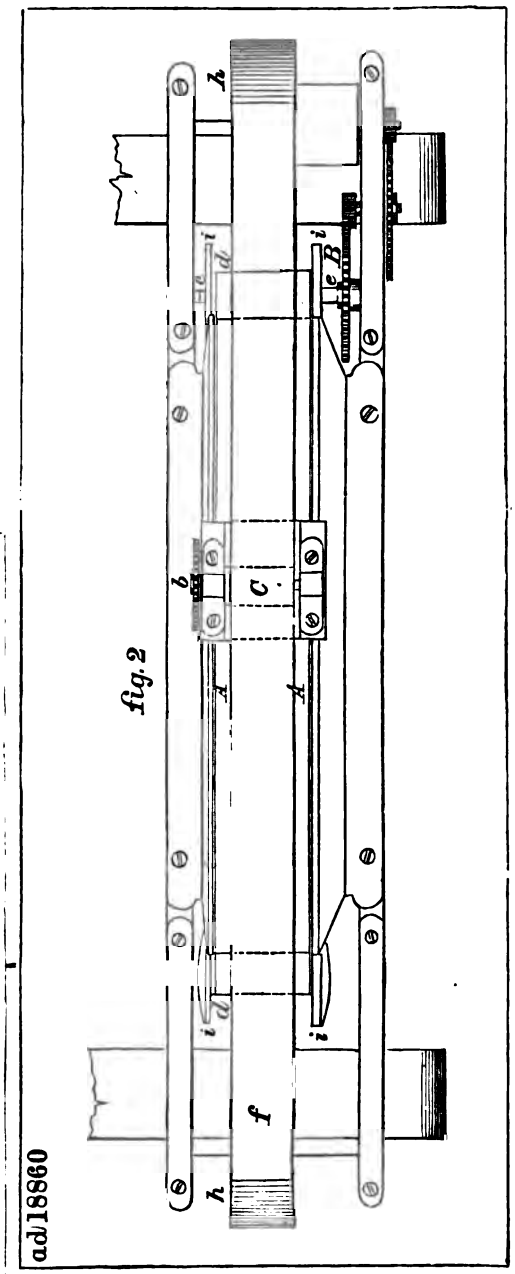

ad18860

16795

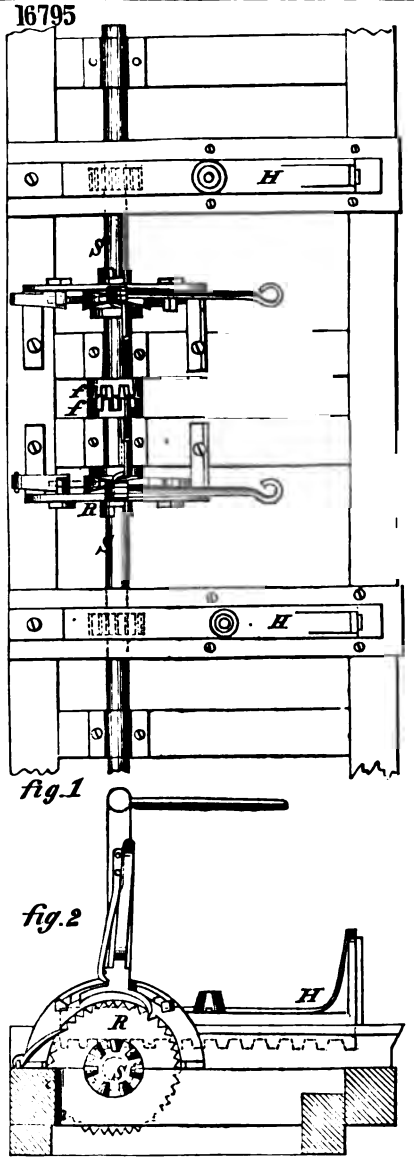

18921.

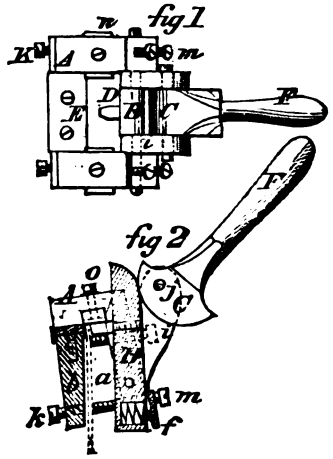

16876

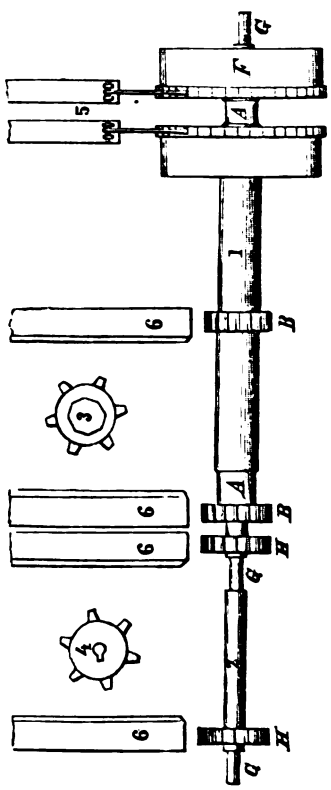

17620

fig.1

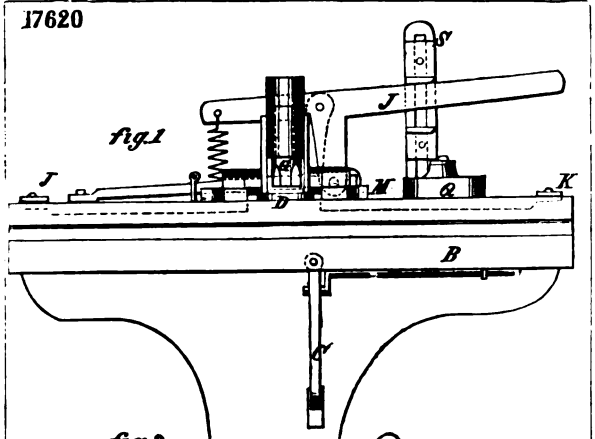

fig.2

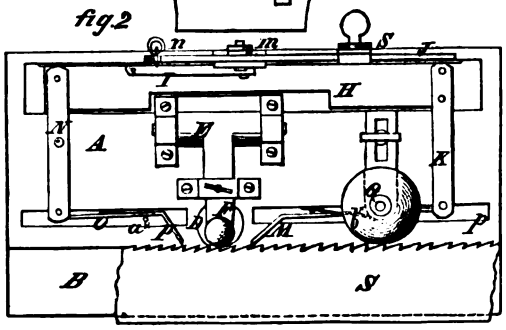

fig.3

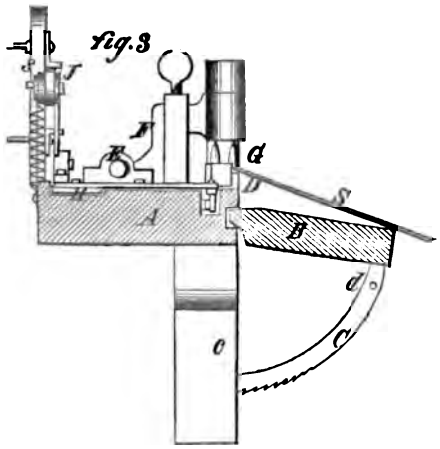

17719

fig.1

fig.2

16888

fig.1

fig.2

fig.3

17677

fig.1

fig.2

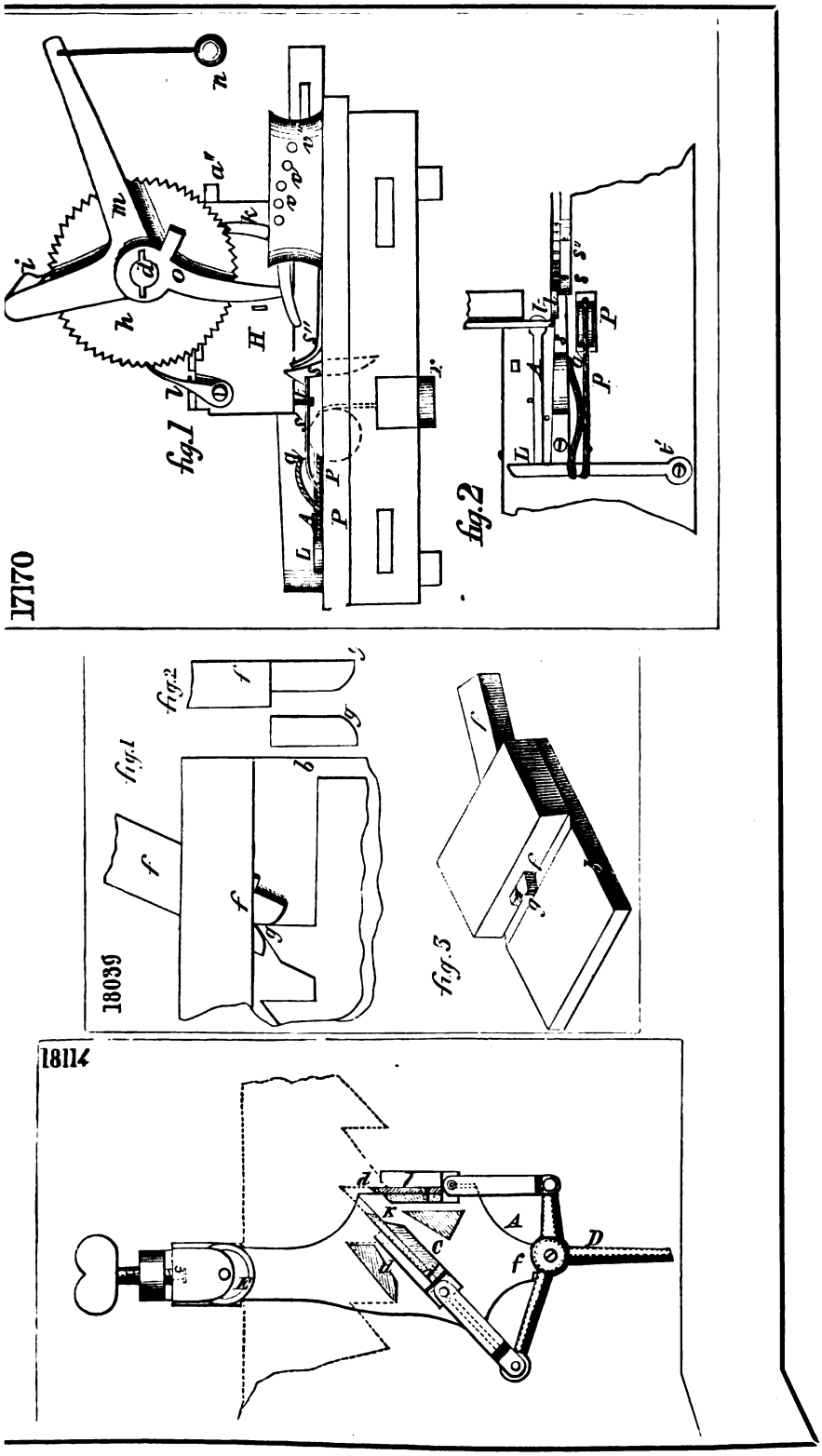
17170
fig.1
fig.2
18039
fig.1
fig.2
fig.3
18114

1874.5

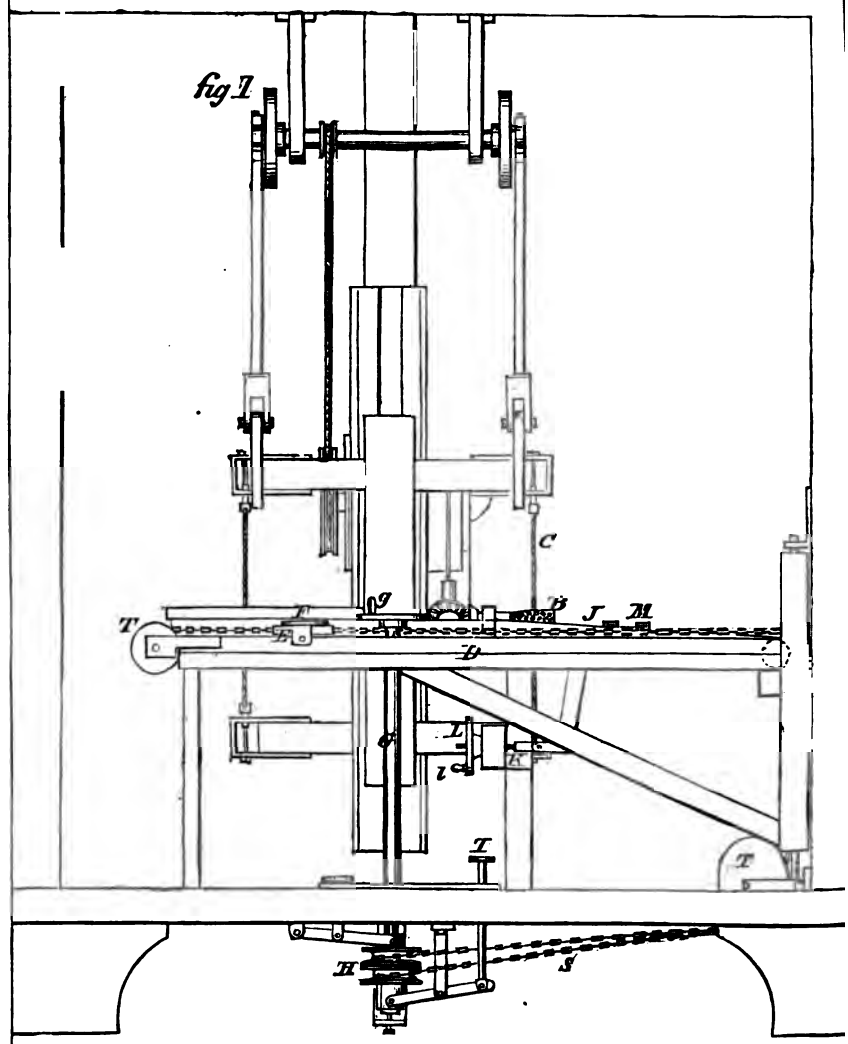

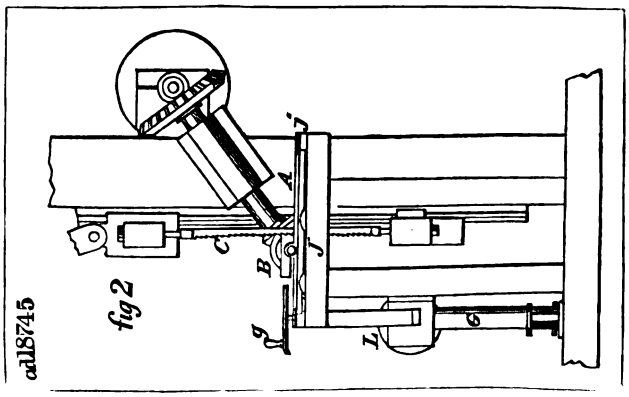

15

fig. 3

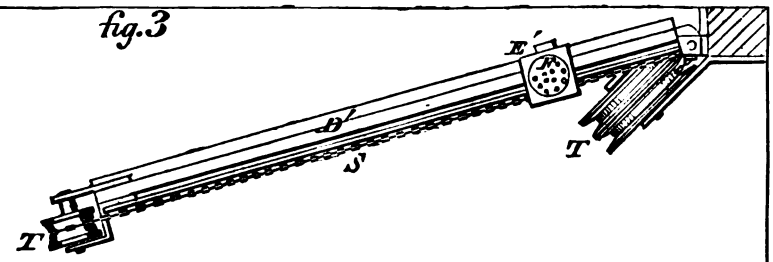

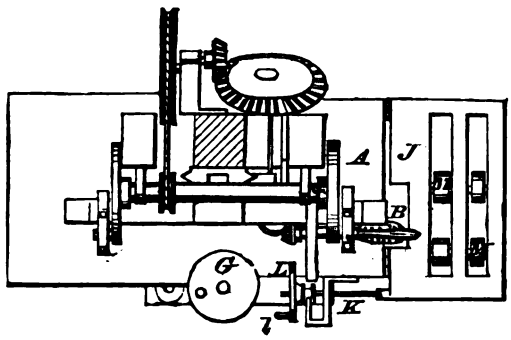

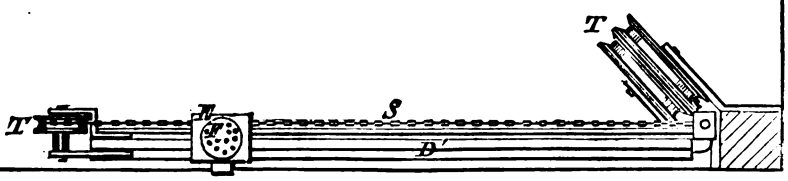

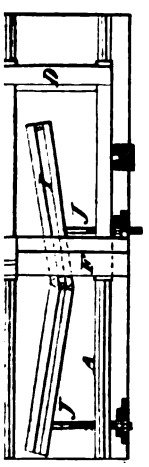

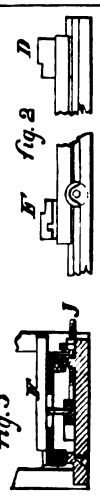

16697

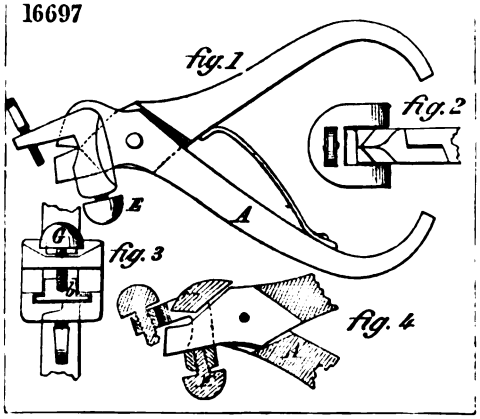

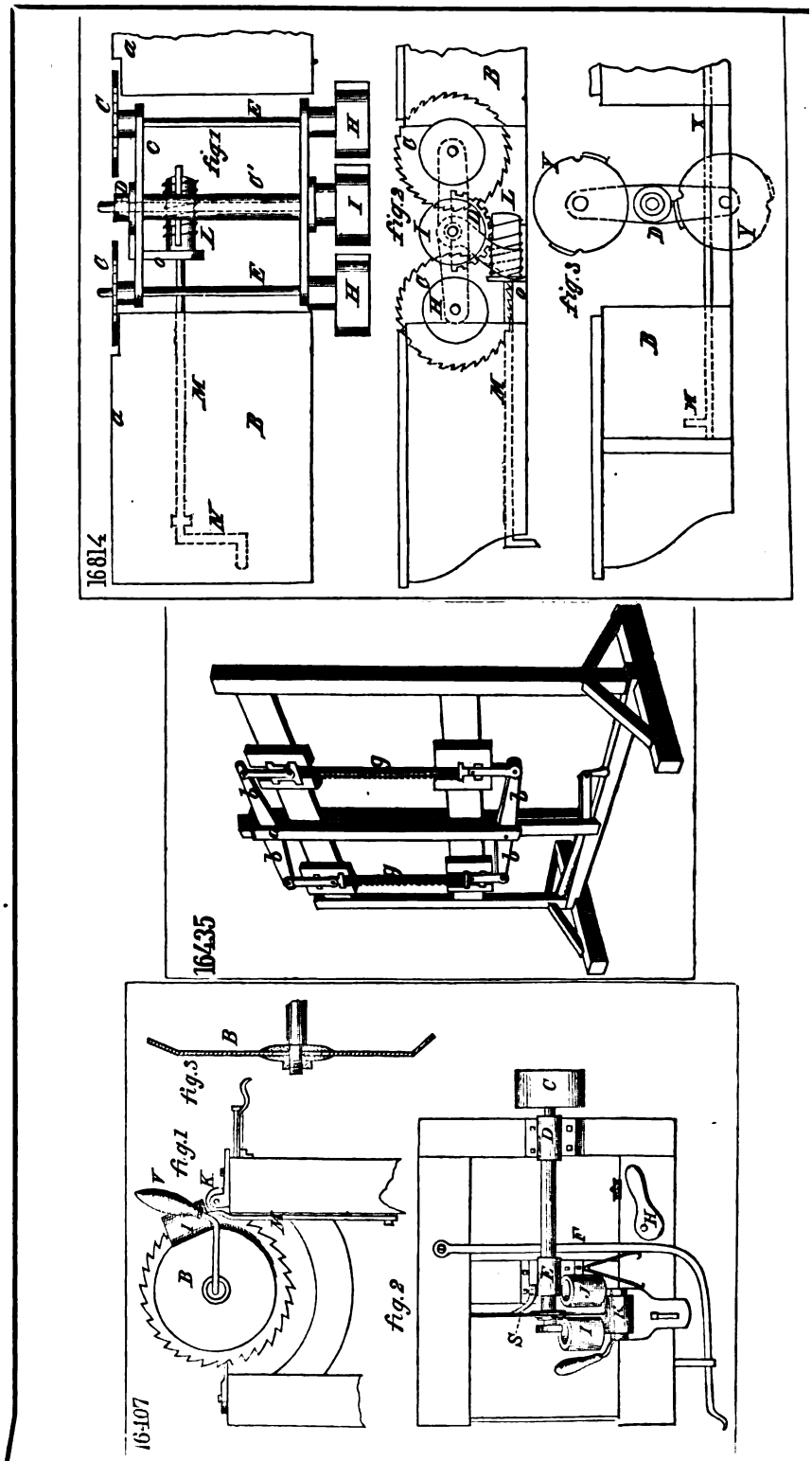
16814
fig.1
fig.2
fig.3
16435
16107

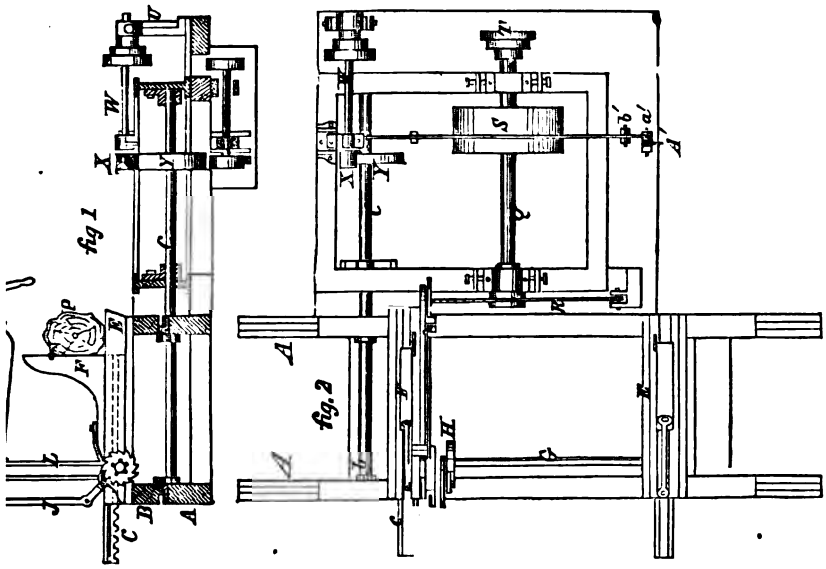

18960

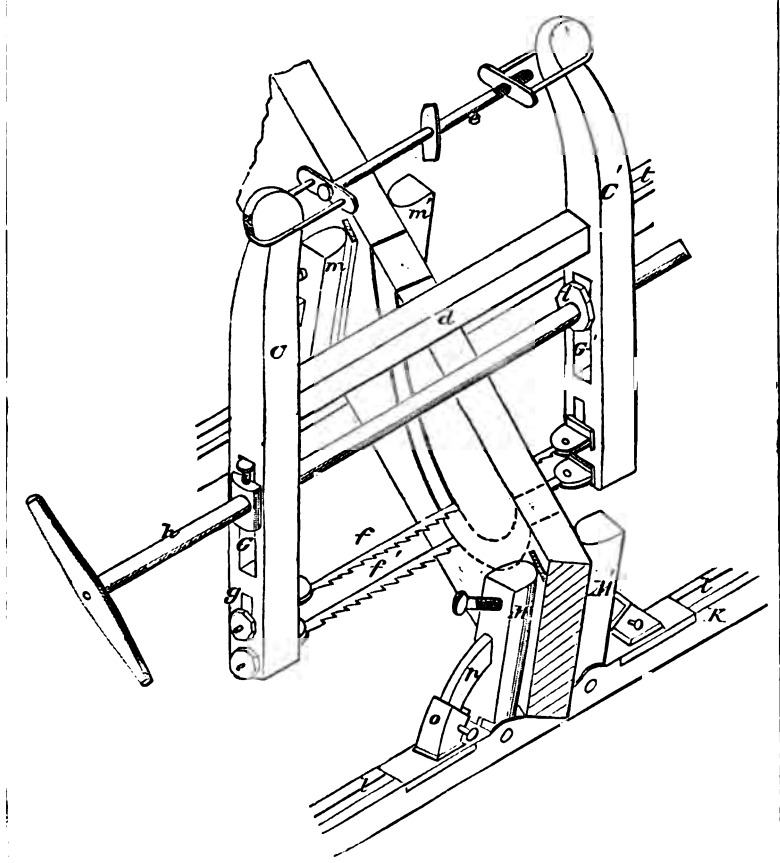

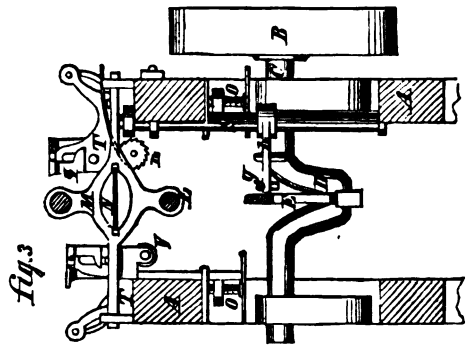

fig.3

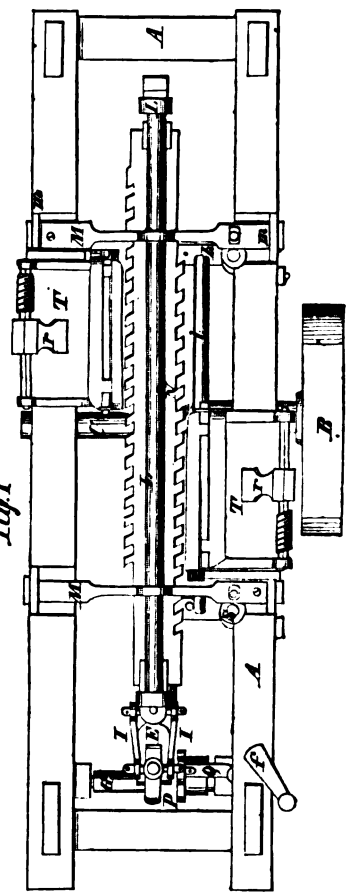

fig.1

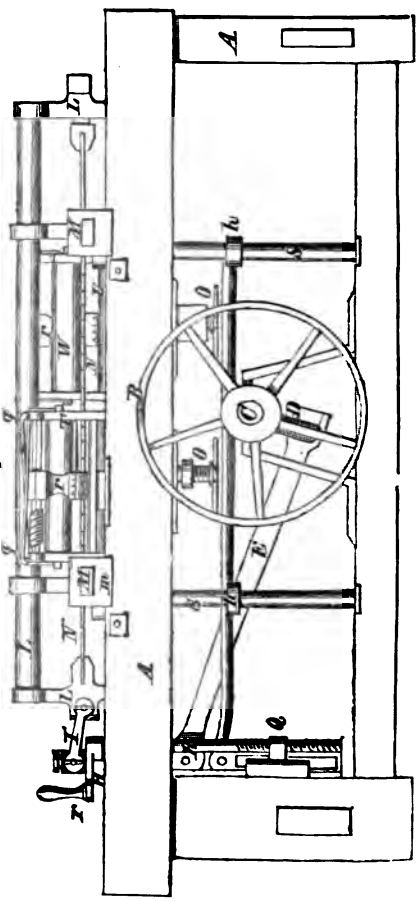

fig.2

18443

8570

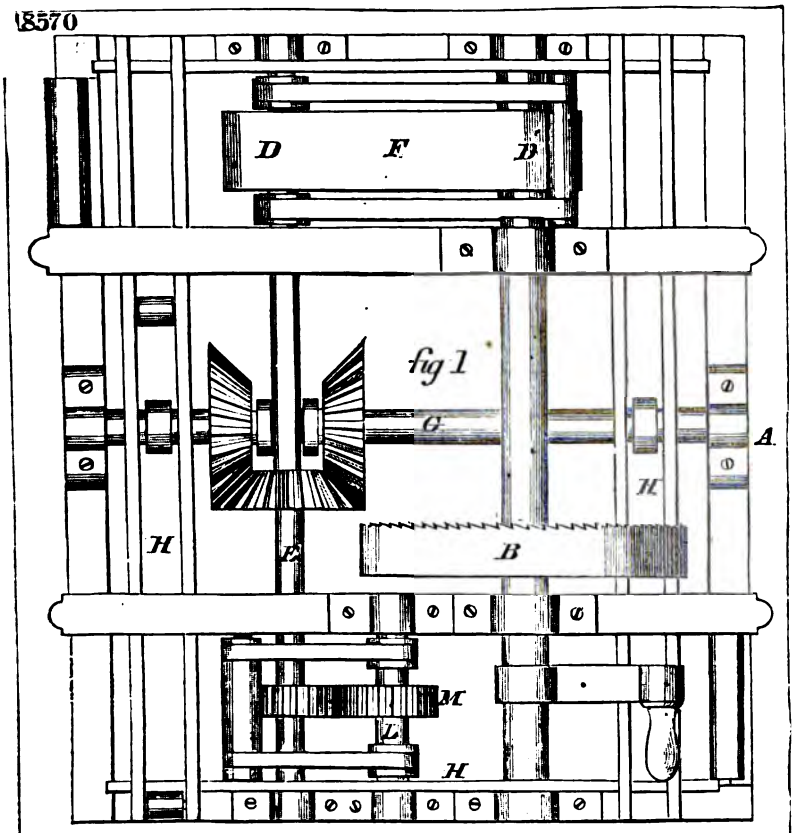

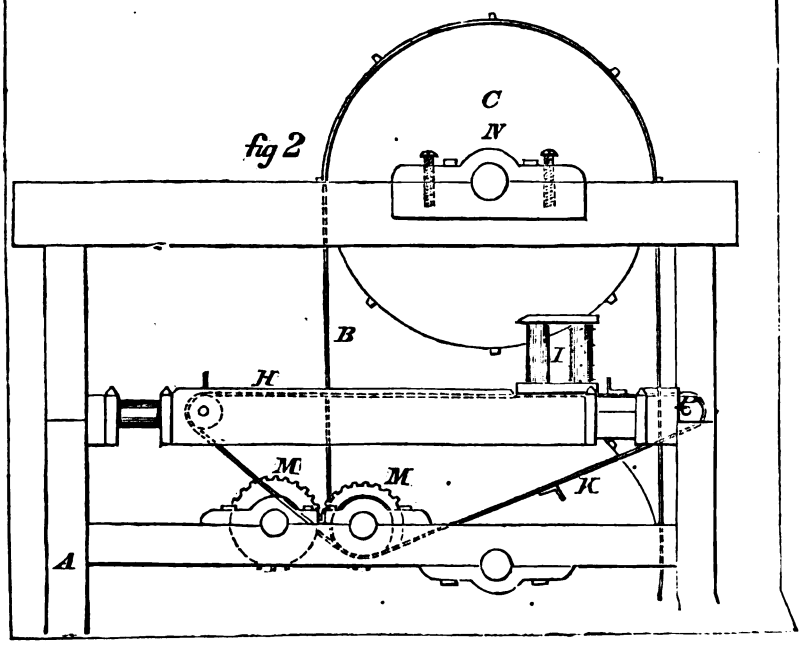

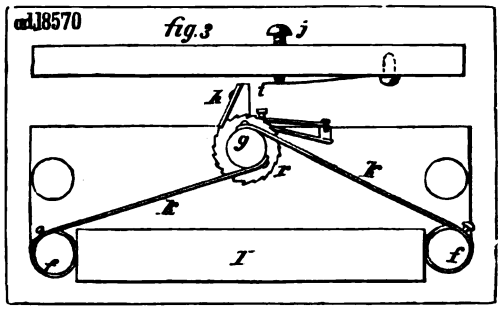
ad.18570
fig.3

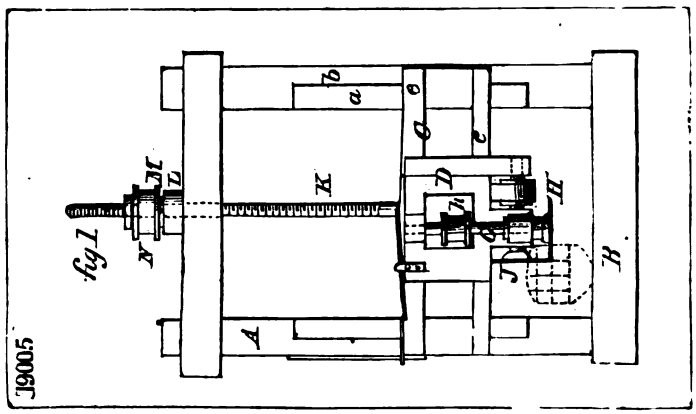
fig 1
19005

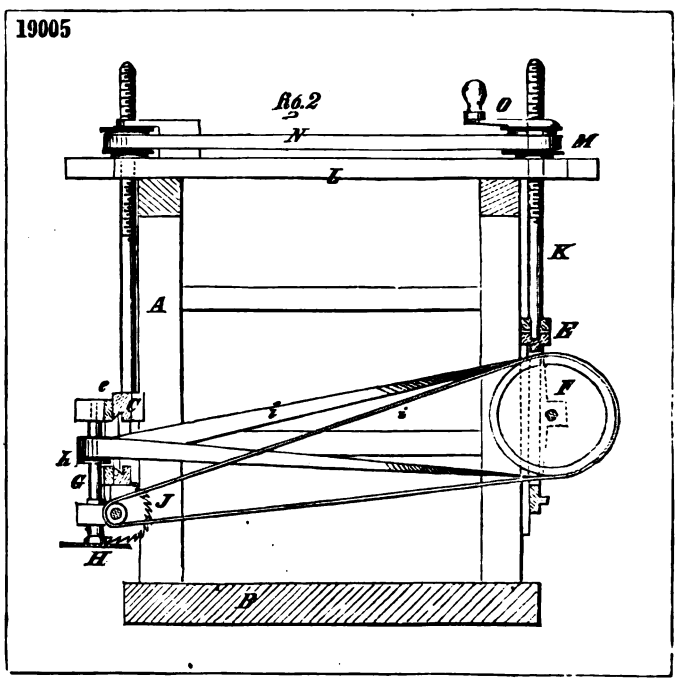
19005
fig.2

16894

fig.1

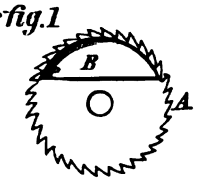

fig.2

fig.3

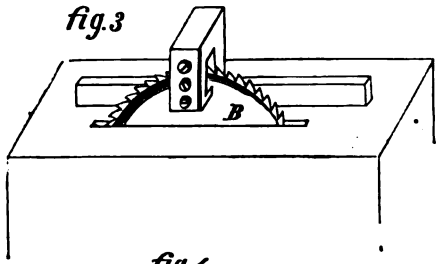

fig.4

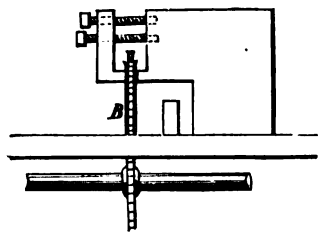

16326

fig.1

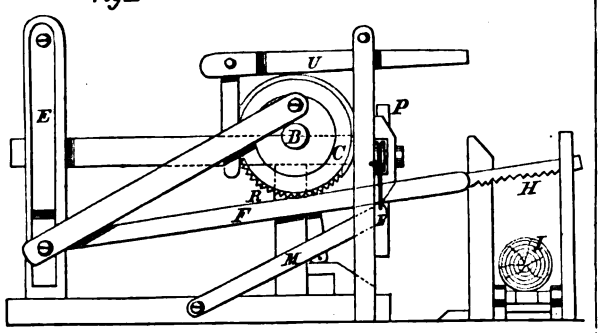

fig.2

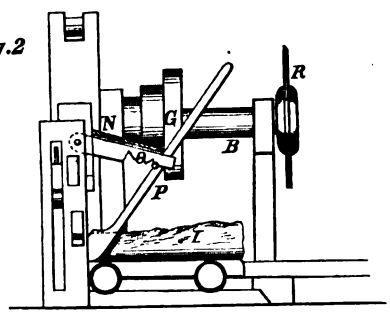

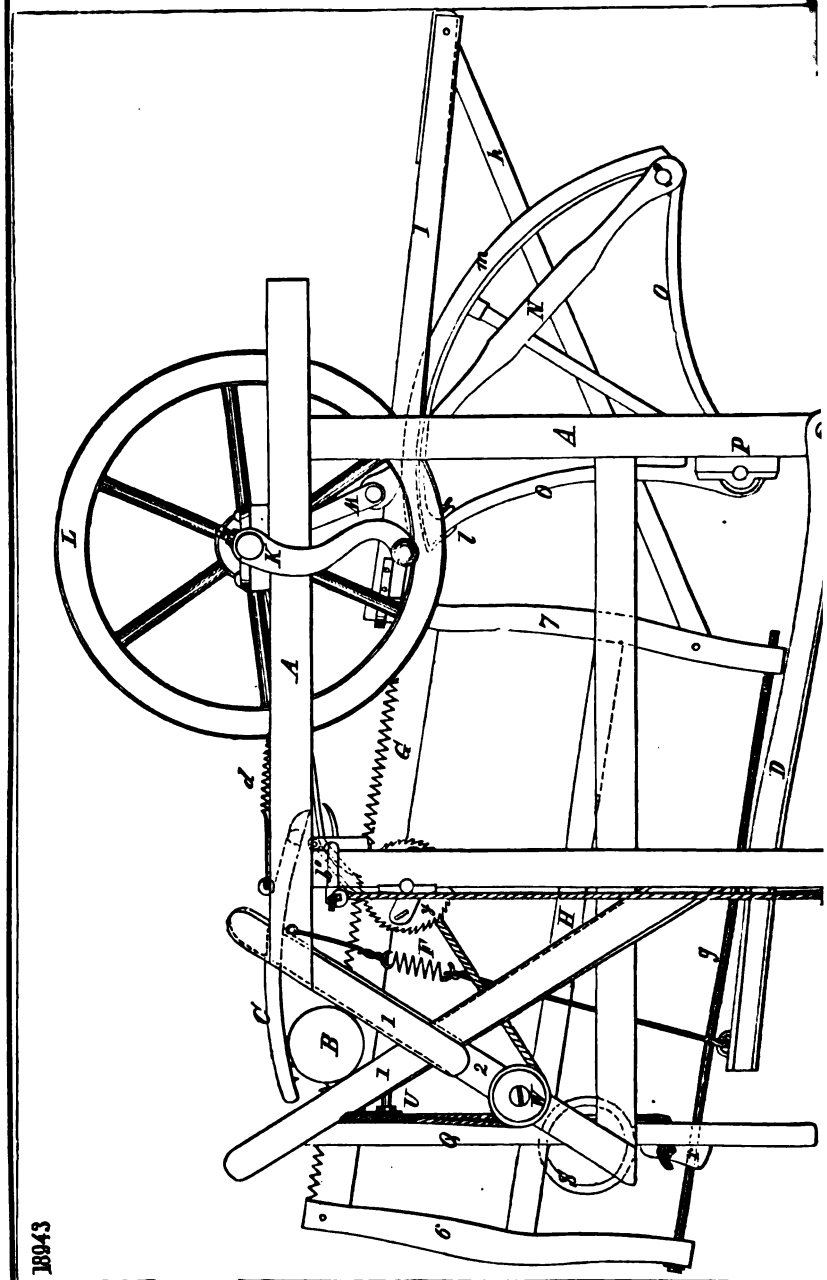
18843

'454

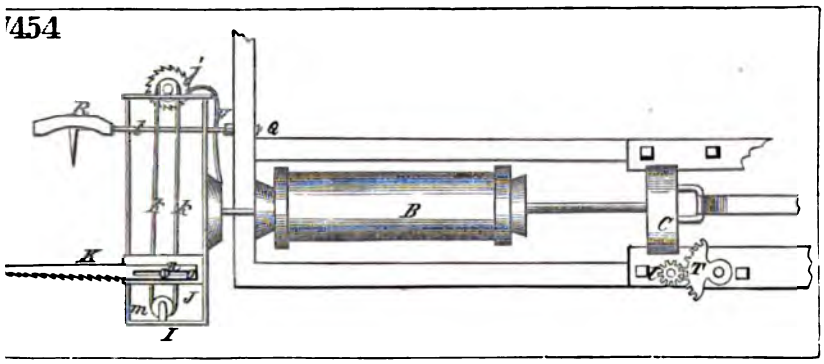

53

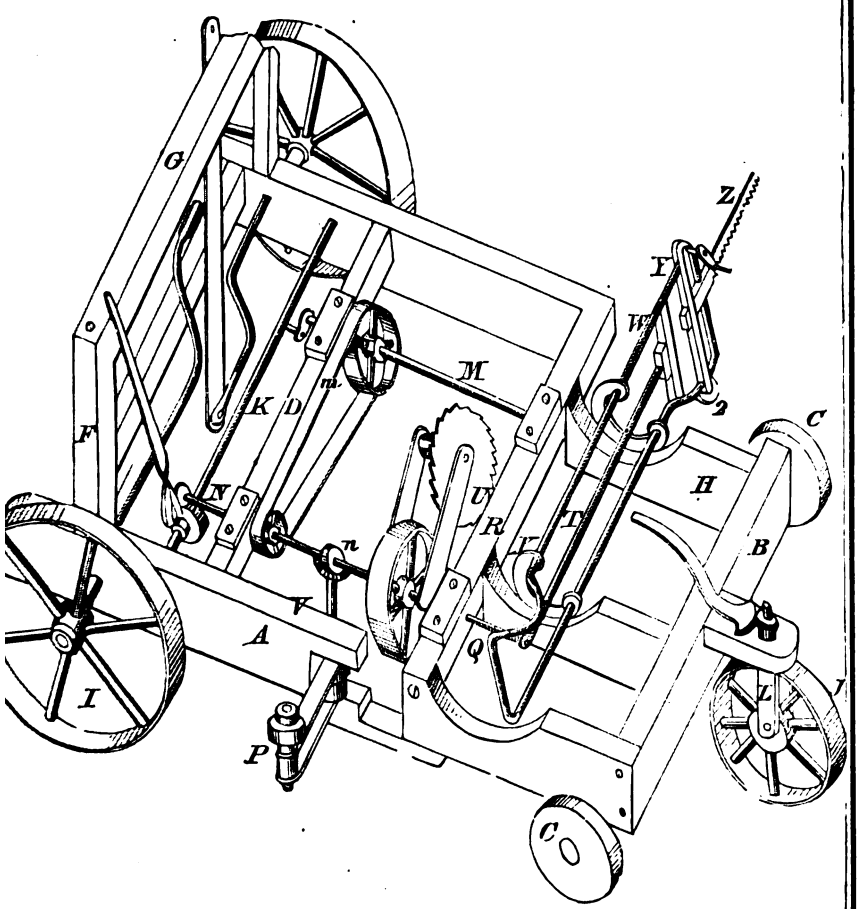

17518

fig.1

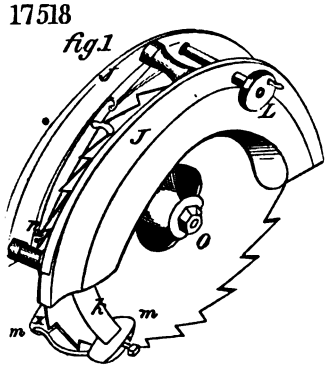

fig.2

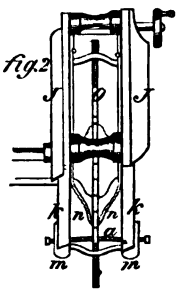

fig.3

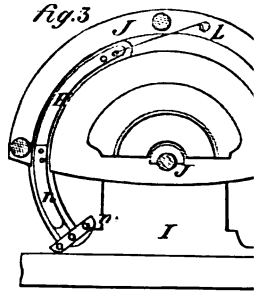

17601

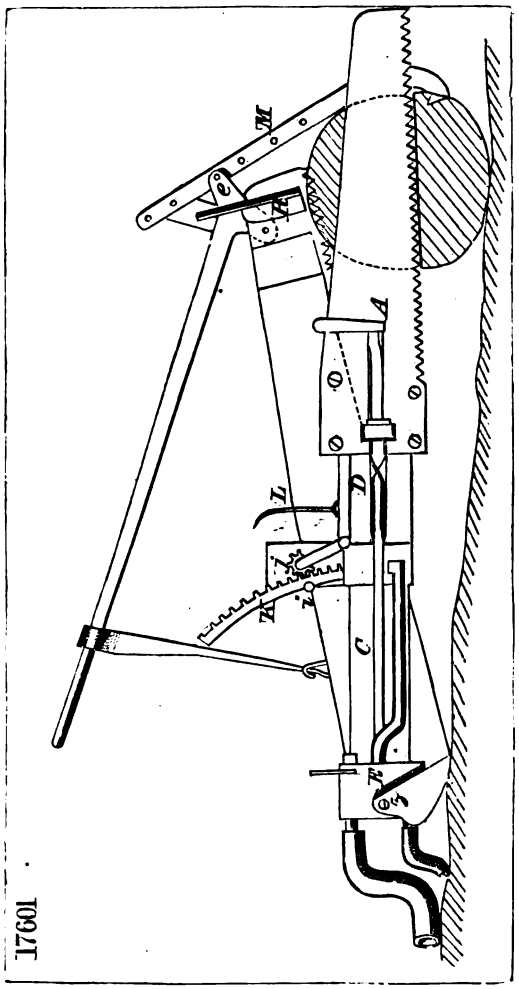

17686

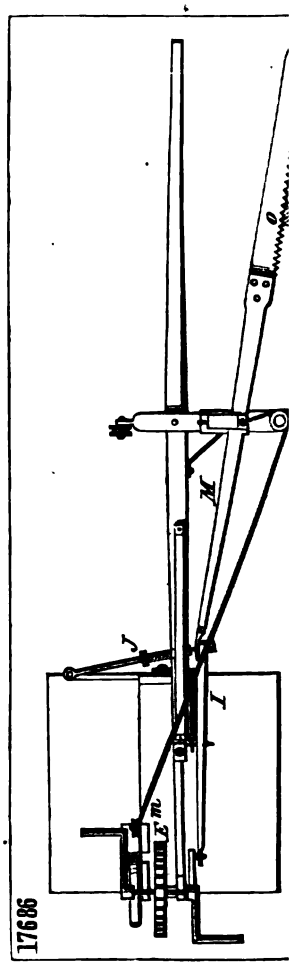

16454 fig.1

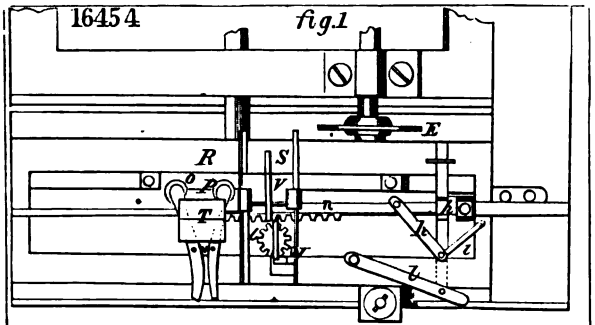

fig.2

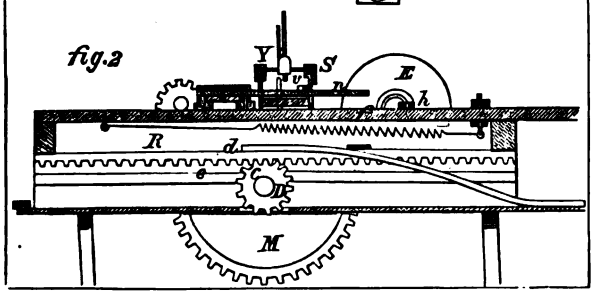

17425

fig2 fig1

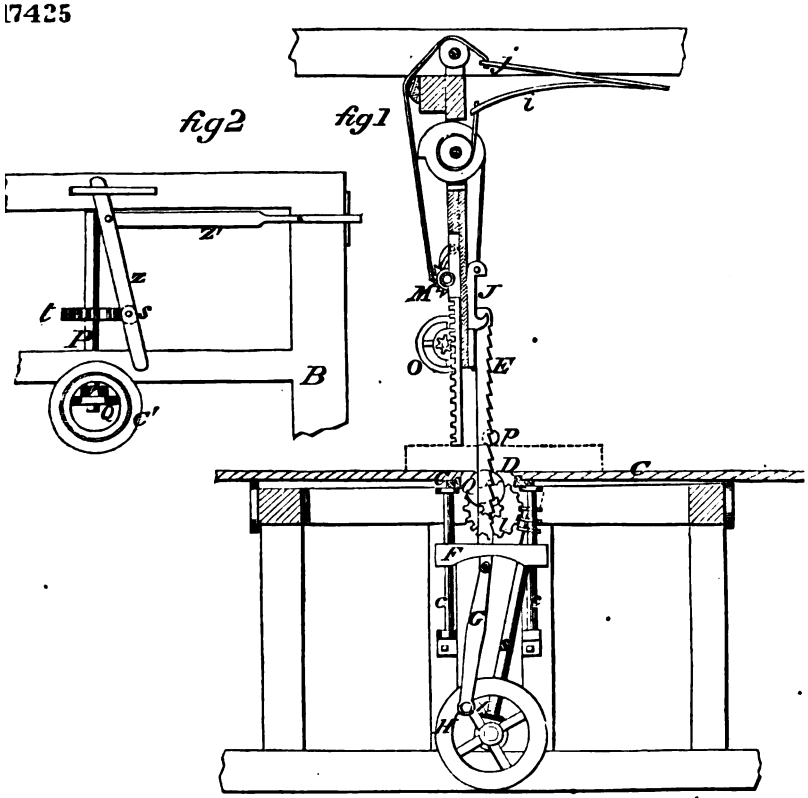

16424

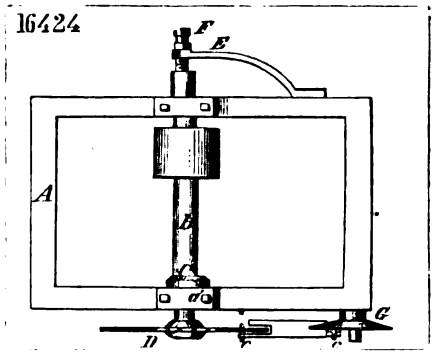

18942

fig 1

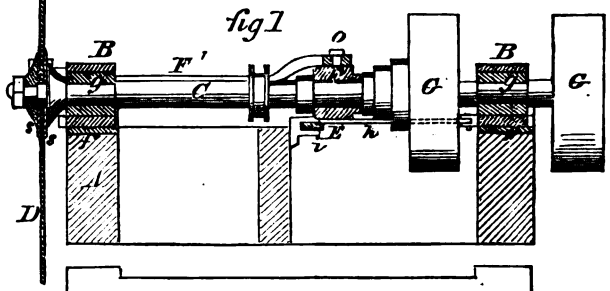

fig 2

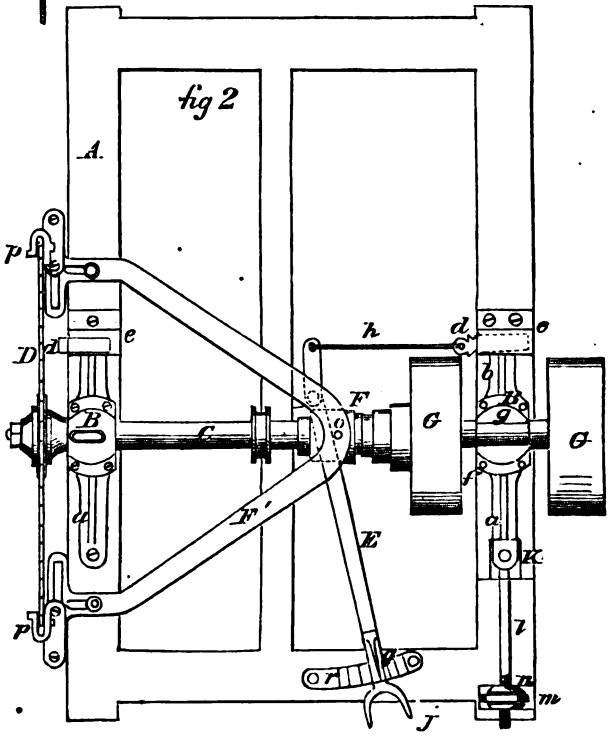

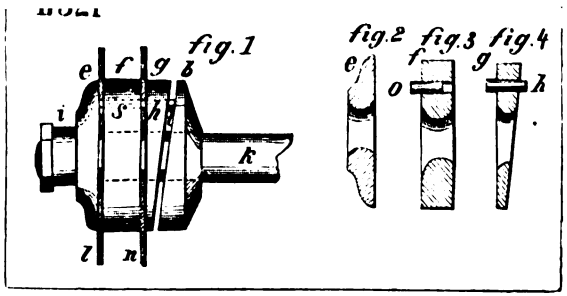

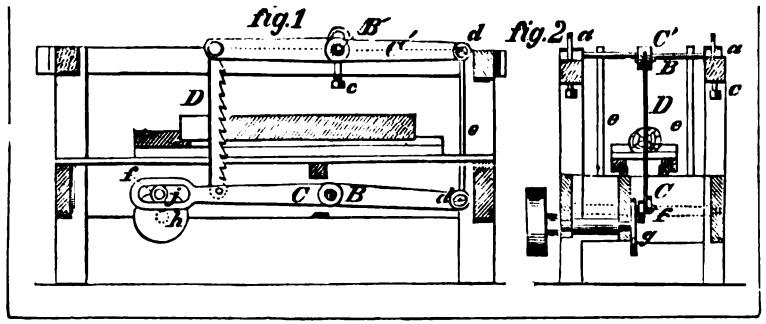

16606

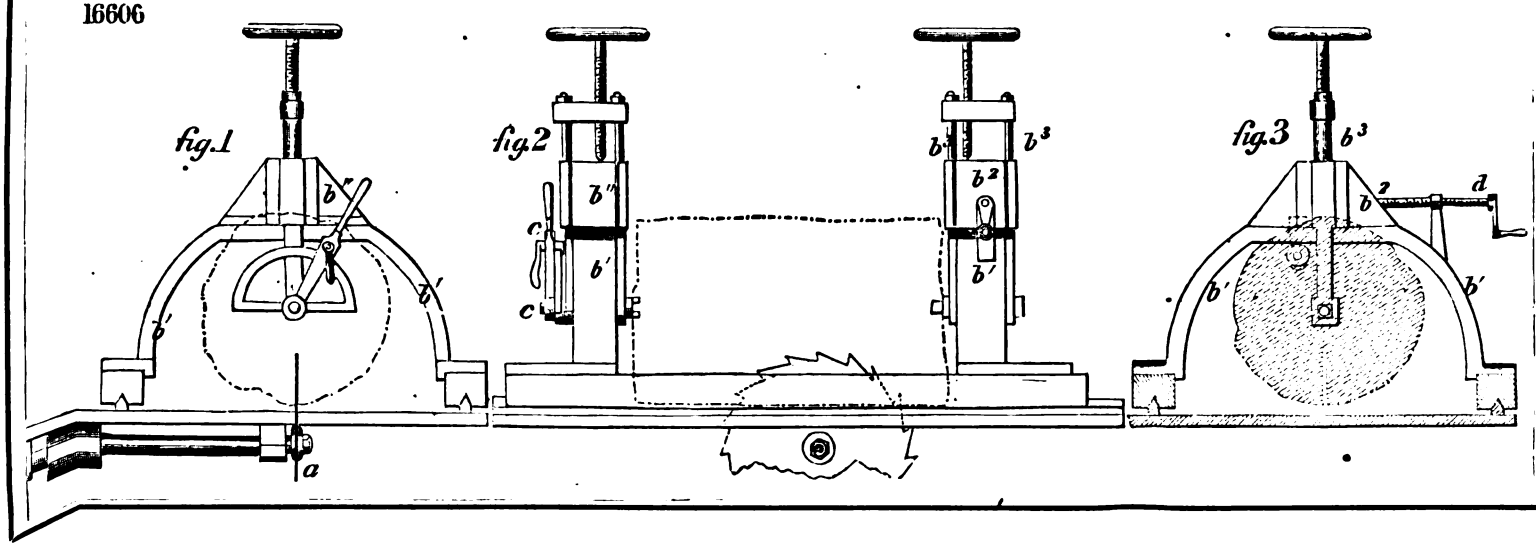

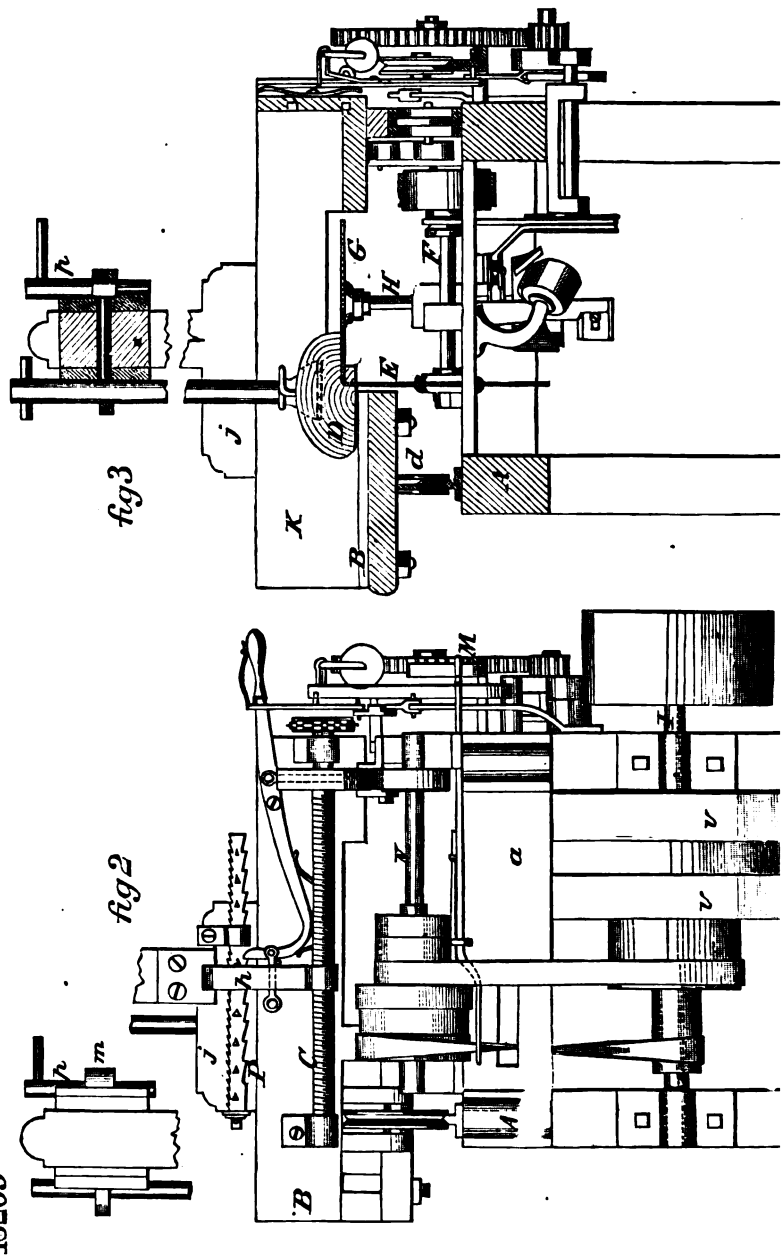
fig3
fig2
18269

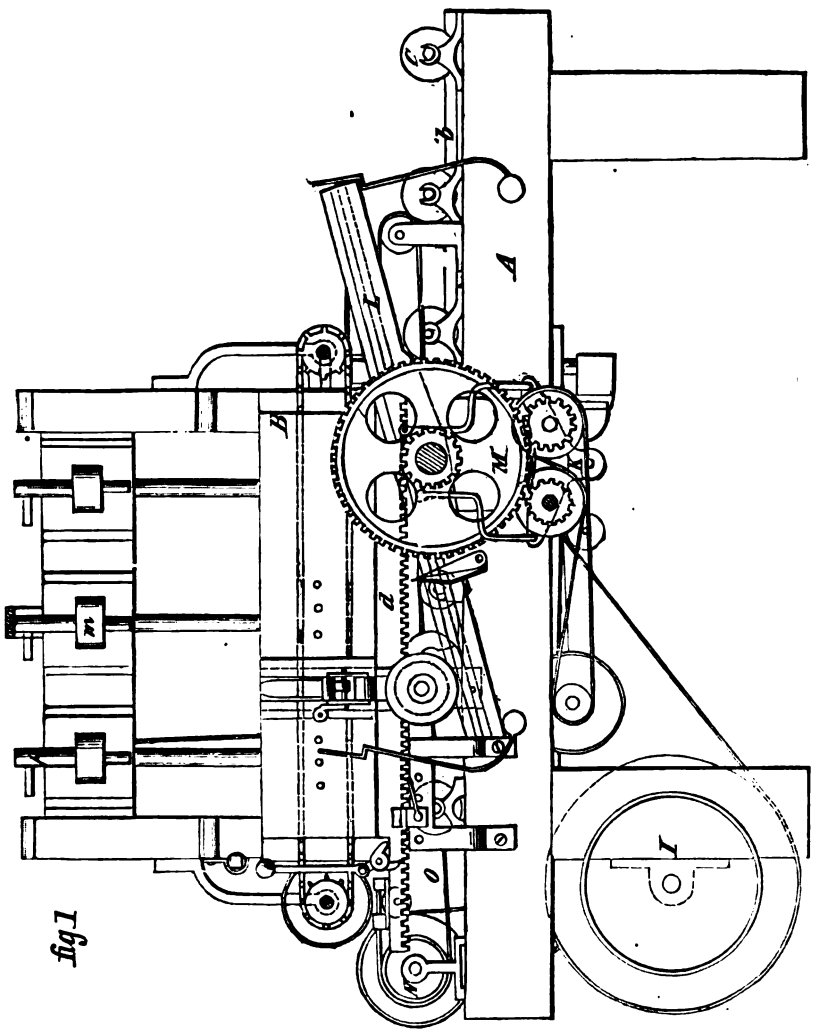

fig 1

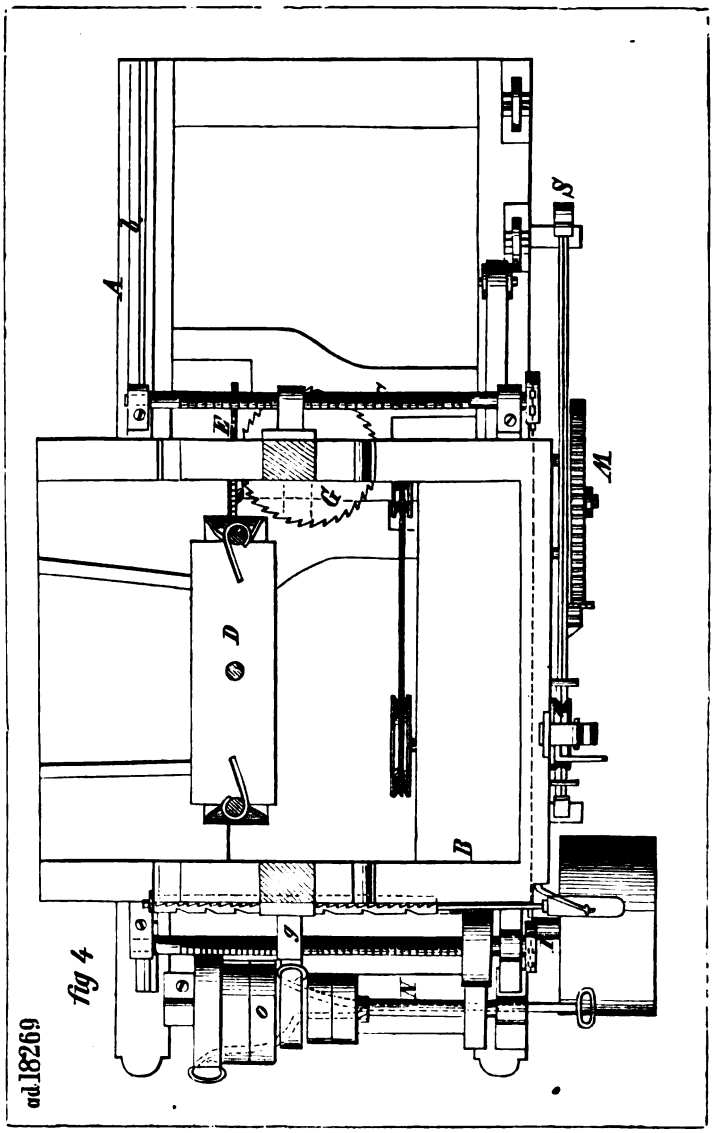
A
S
M
D
B
N
fig 4
ad.18269

3854

fig 1.

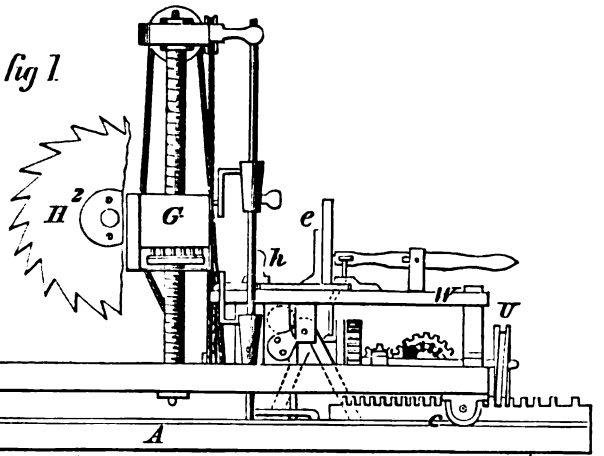

fig 2

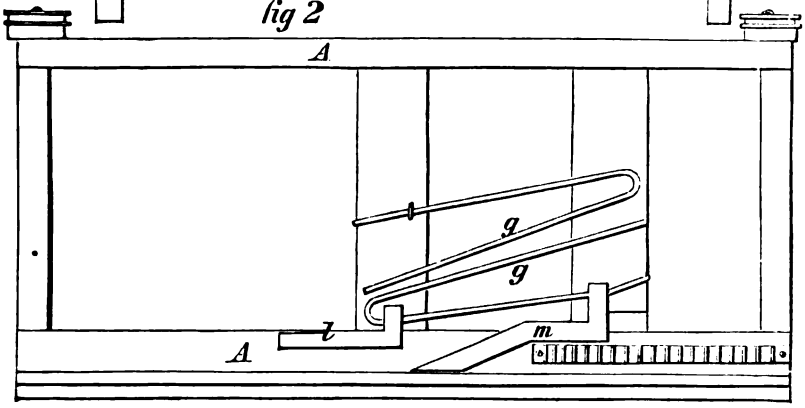

fig 3

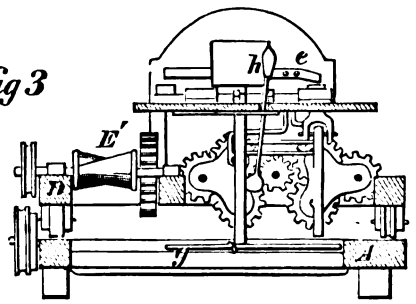

18948

fig 1

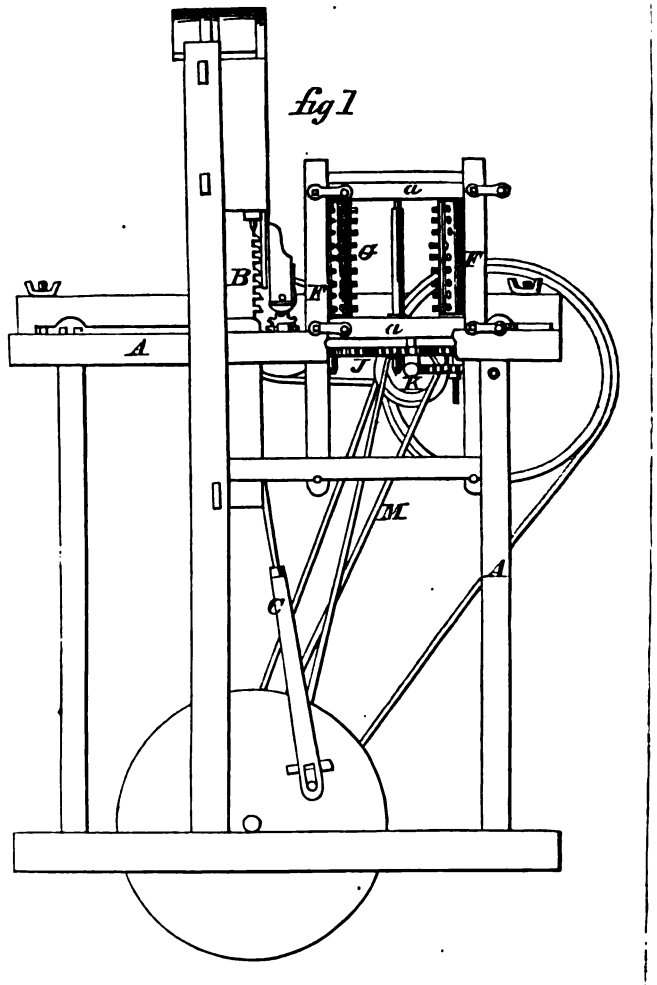

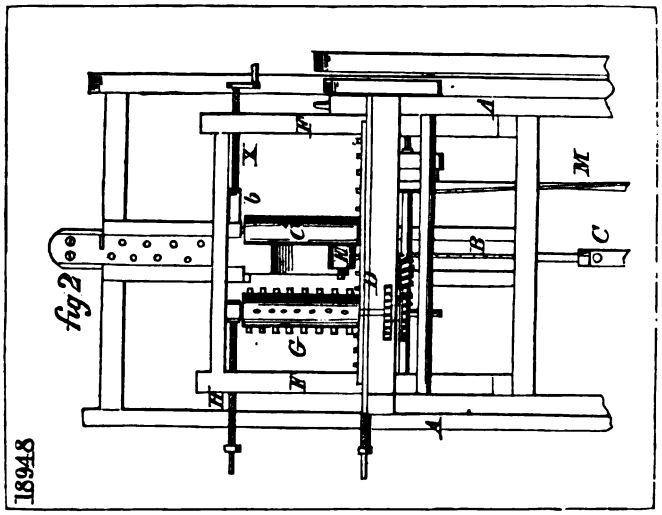

16812.

fig.1

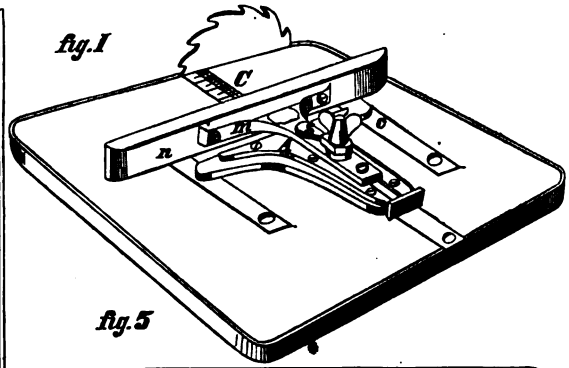

fig.5

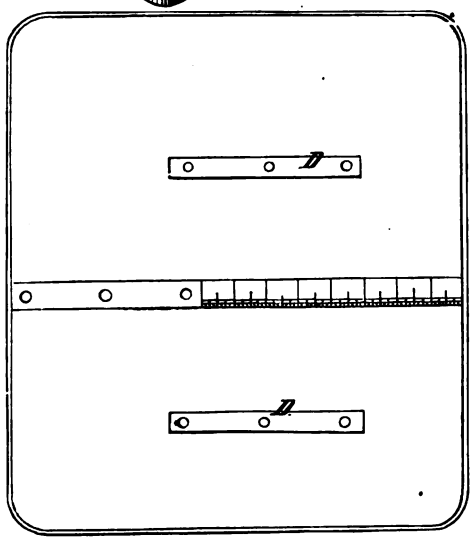

fig.2

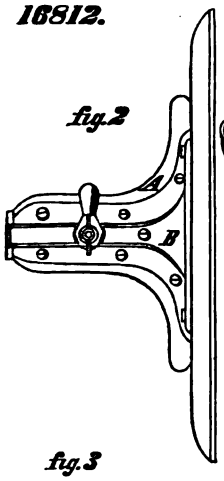

fig.3

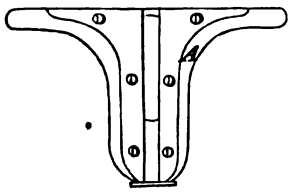

fig.4

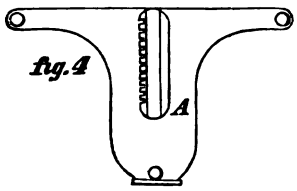

16655

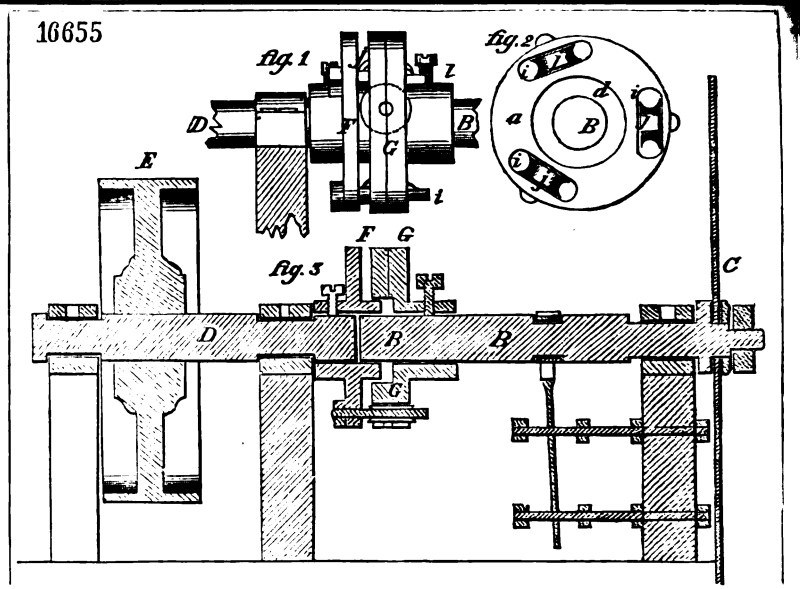

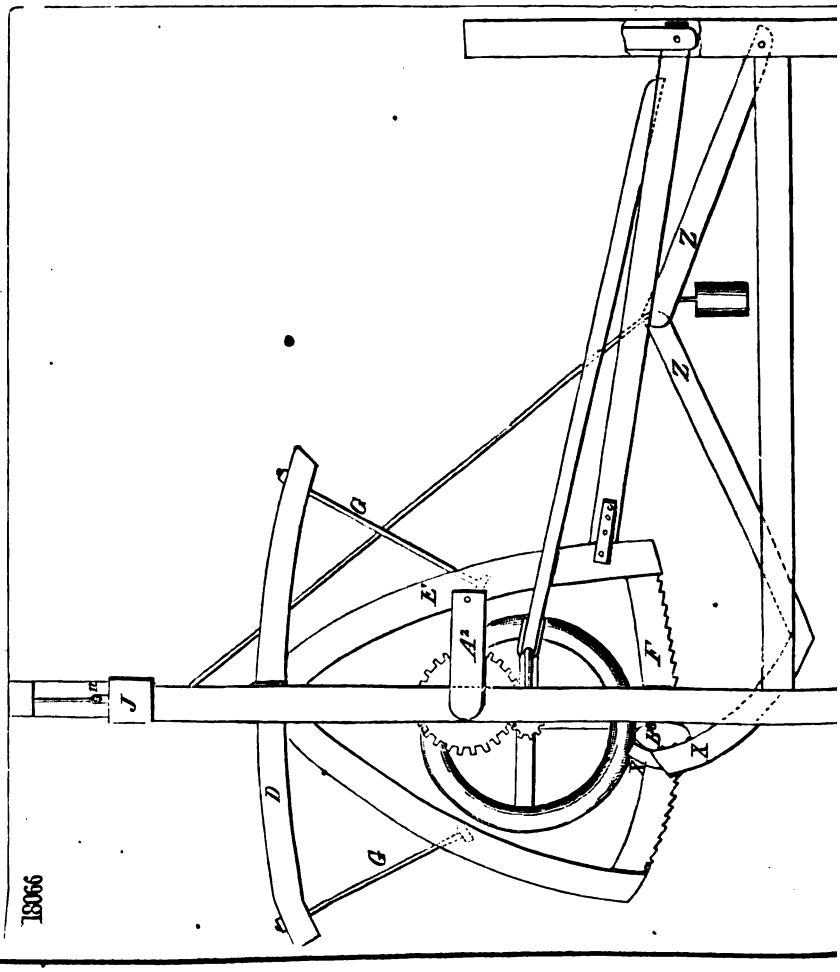

18066

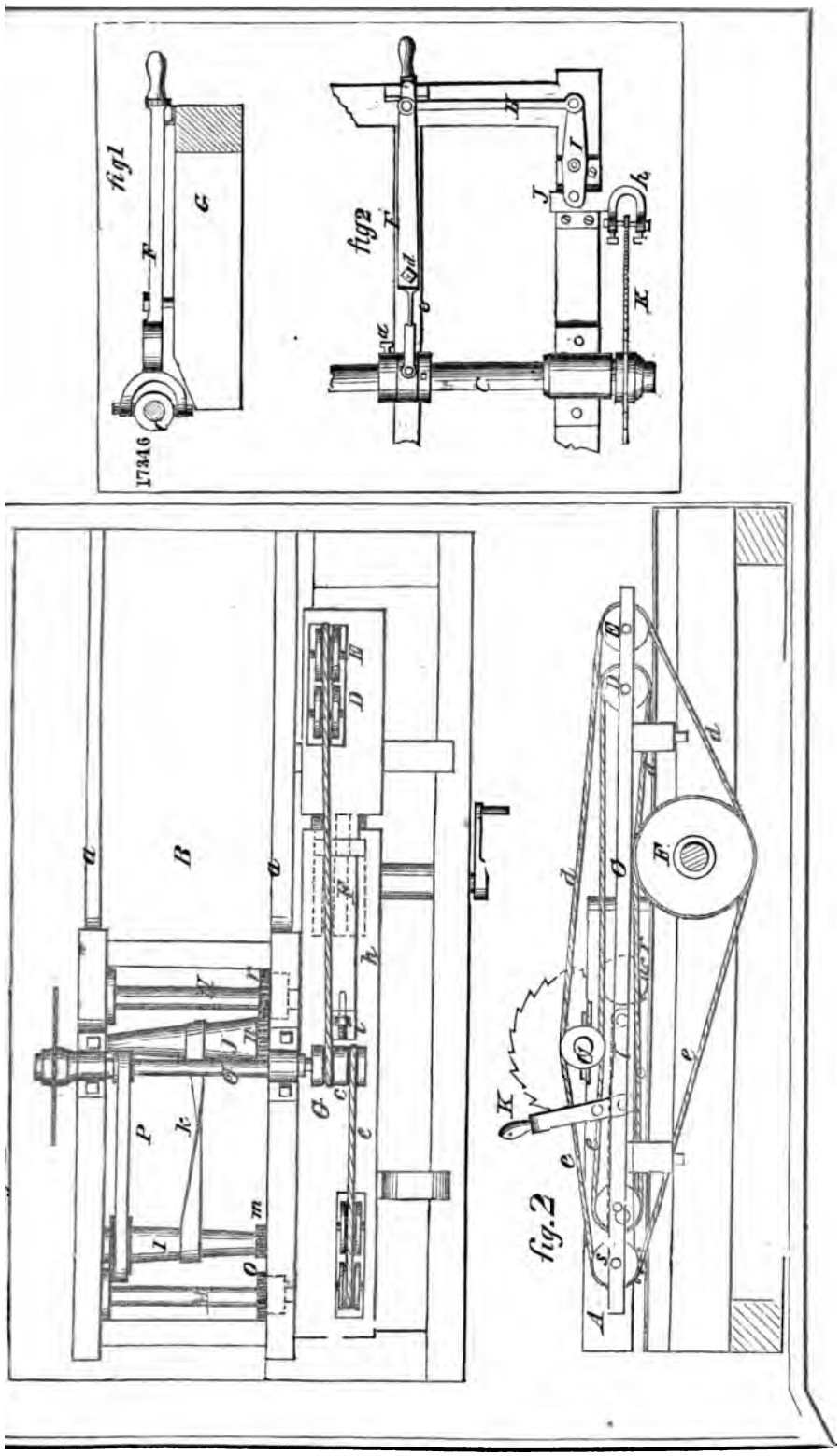
fig1
17346
fig2
fig.2

18017

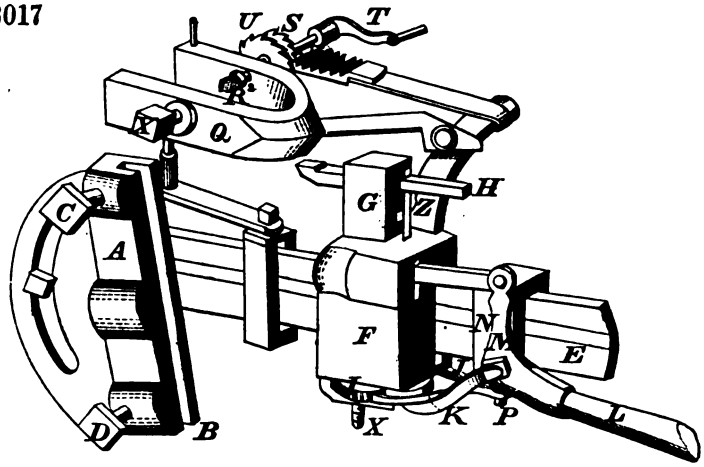

17626

fig. 1

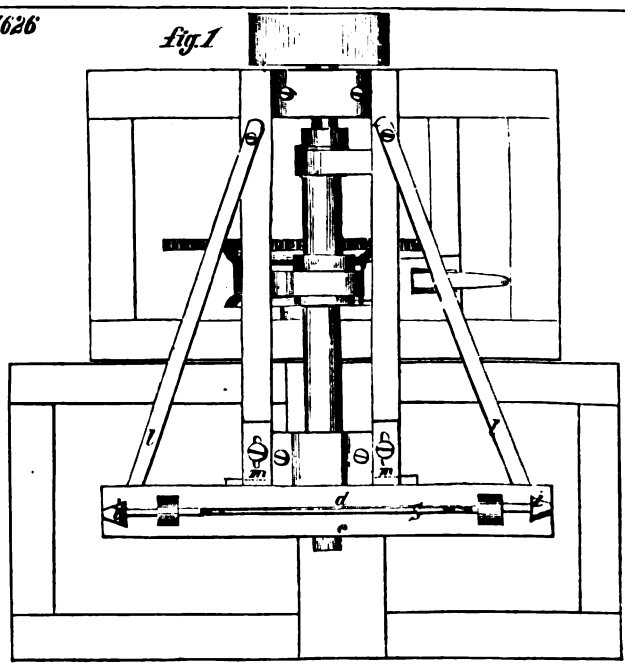

fig. 2

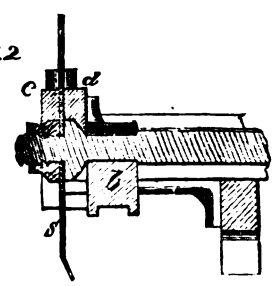

17629 *fig.1*

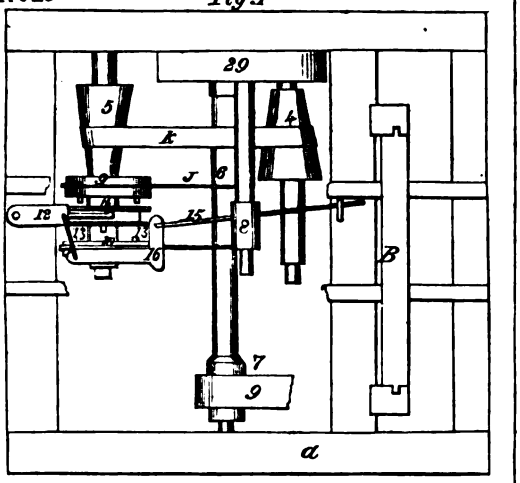

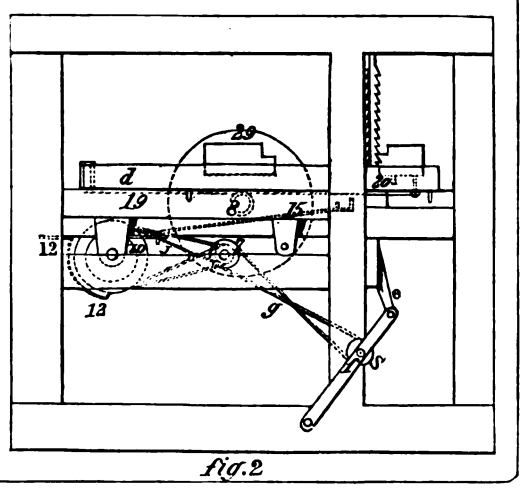

fig.2

16643

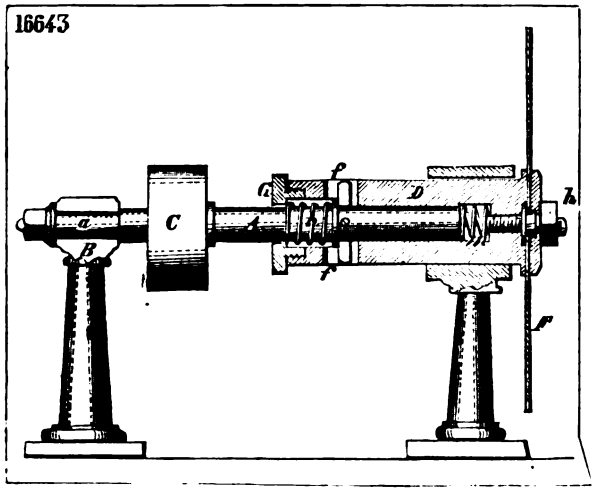

17840

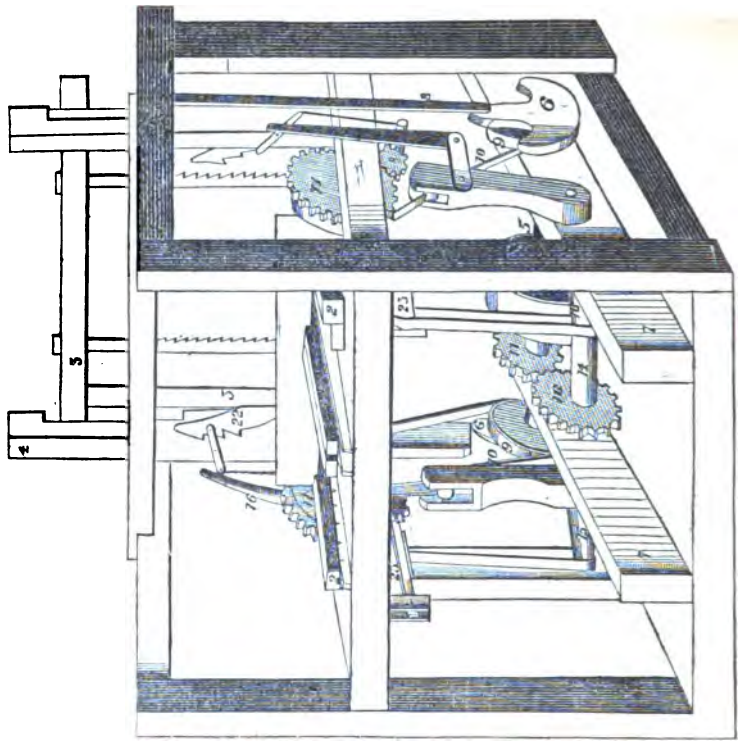

17226 fig.1

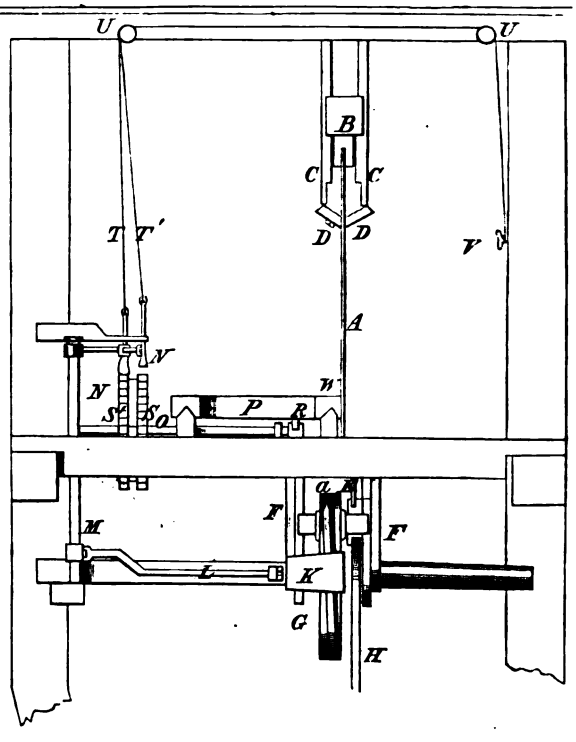

fig.2

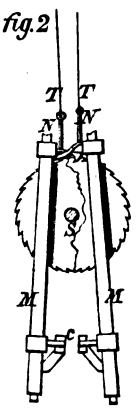

fig.3

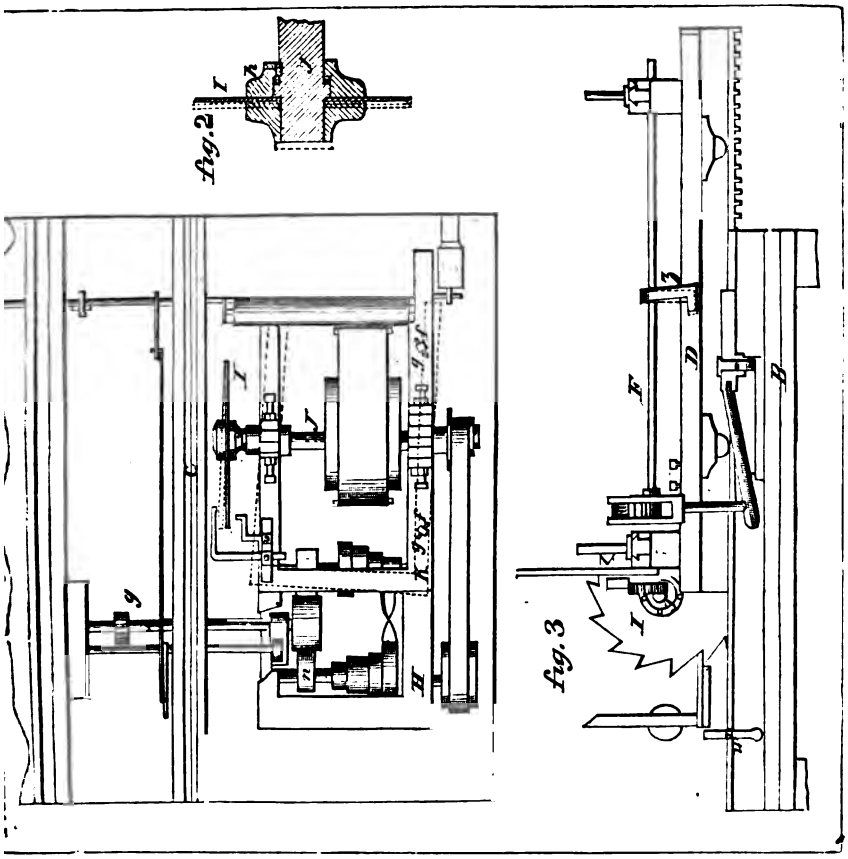
Fig. 2
fig. 3

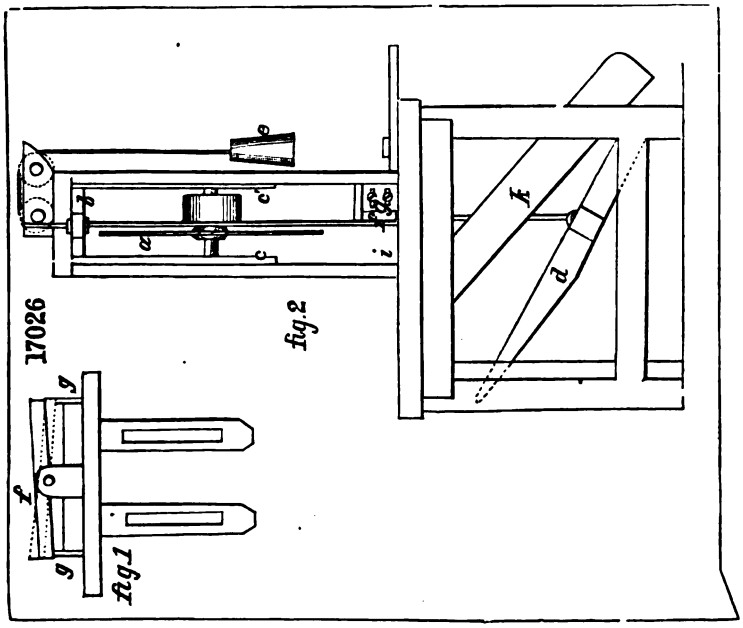
17026
fig. 2
fig. 1

16725

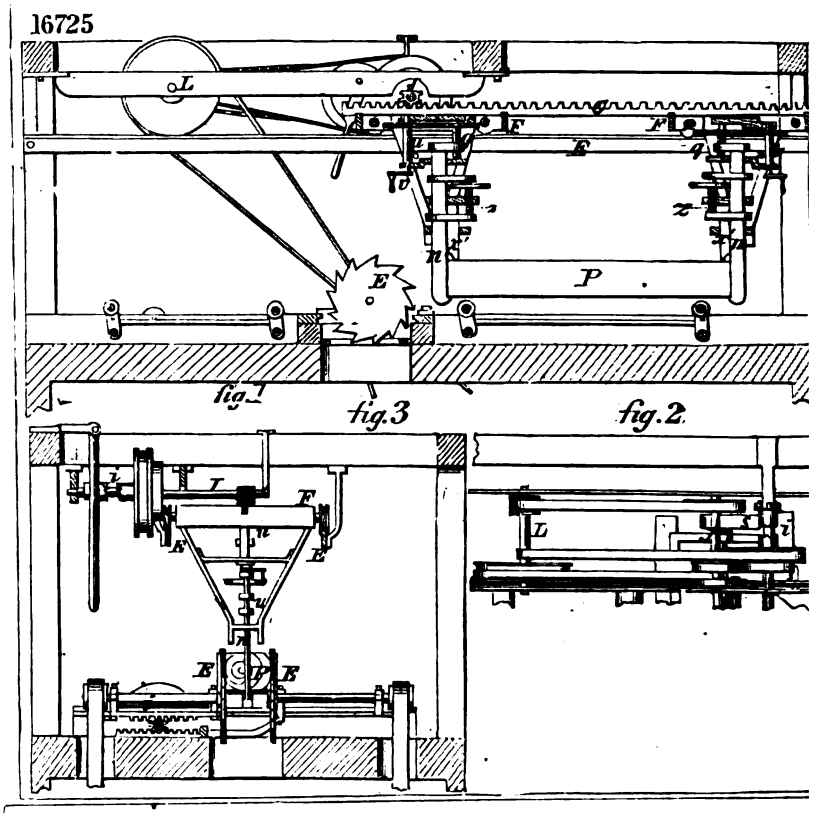

16624

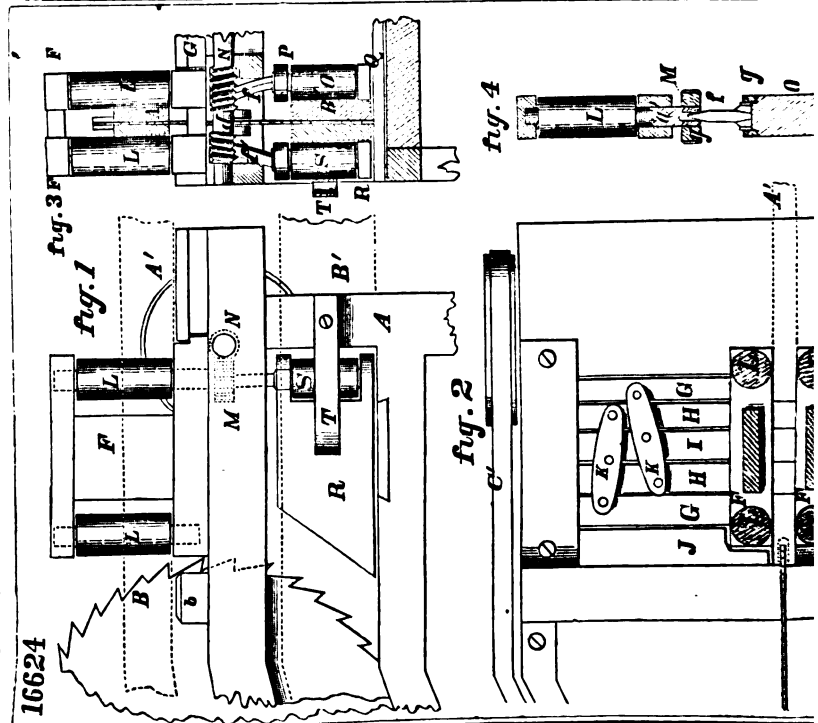

B

fig. 1

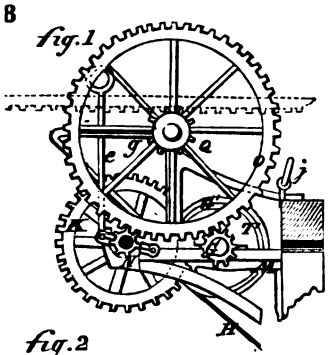

fig. 2

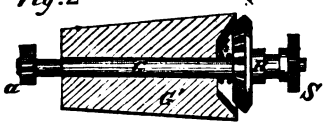

fig. 3

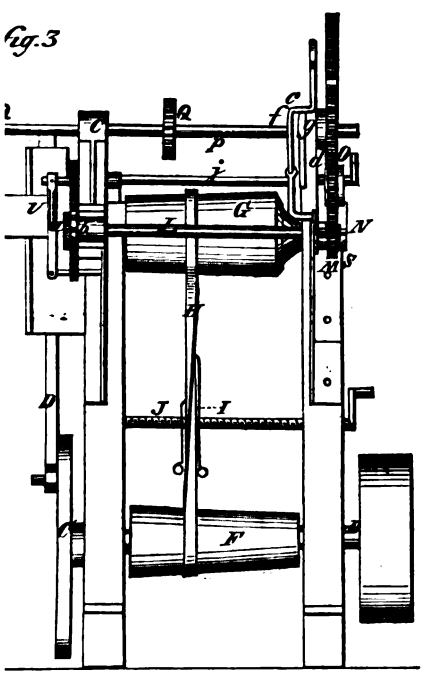

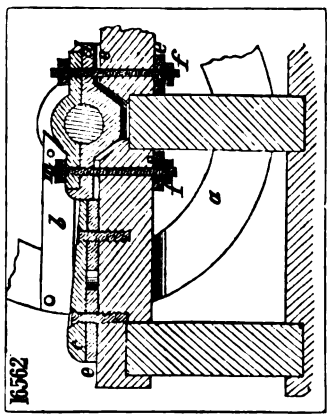

17823

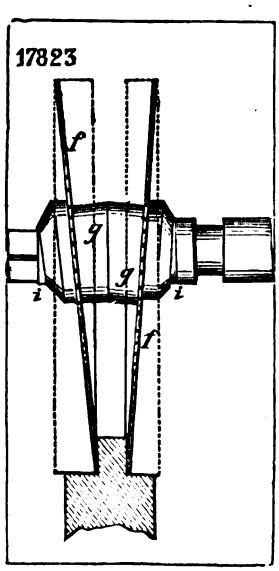

18354

fig 1

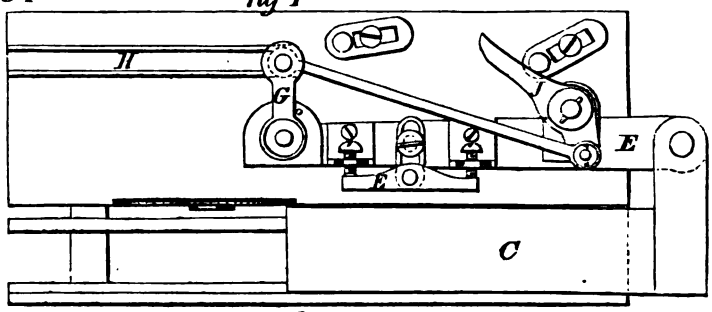

fig 2

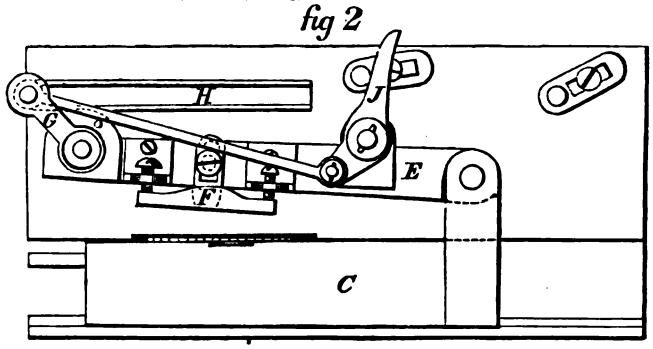

fig 3

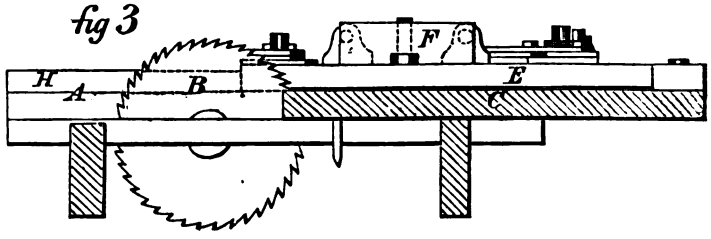

18967

fig 2

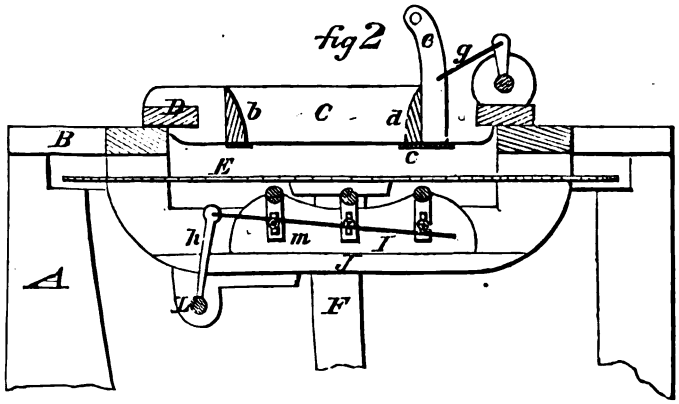

16339

fig.1 fig.2

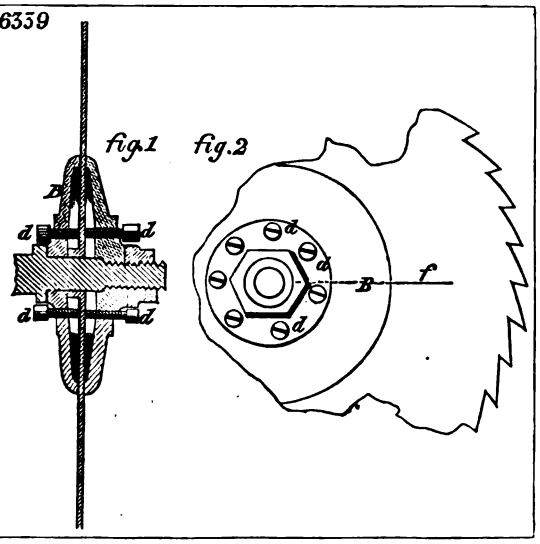

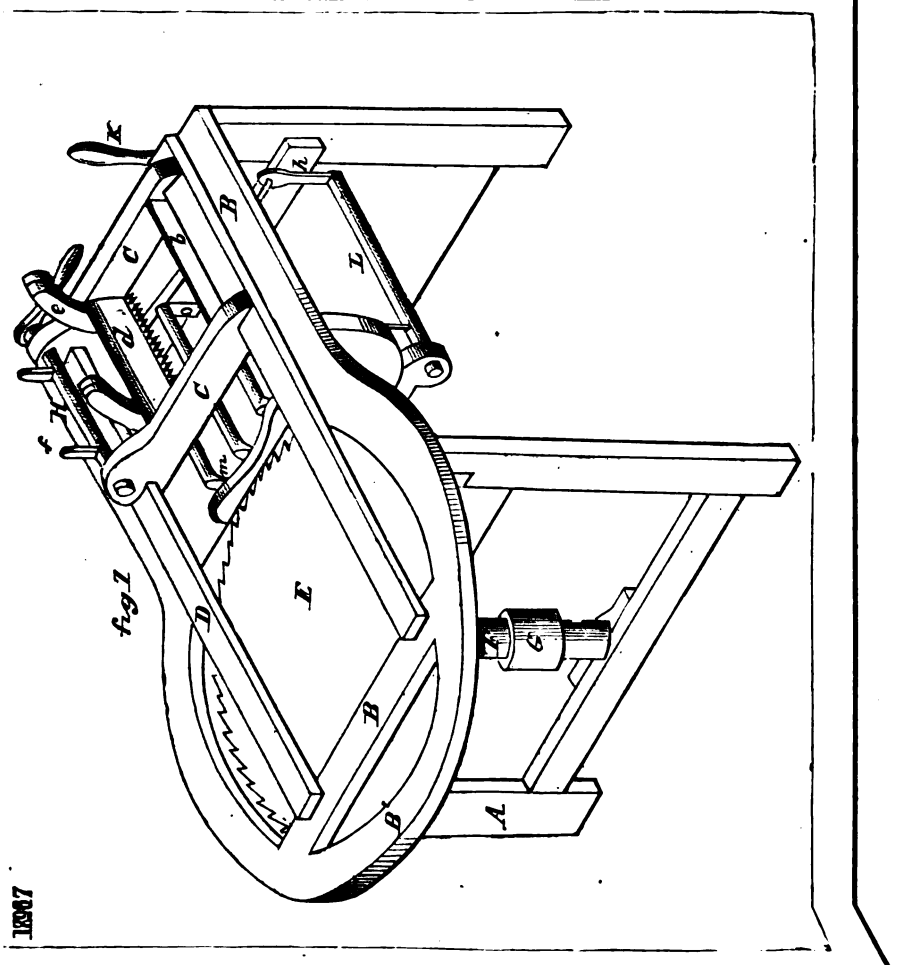

16987

17432

fig 1

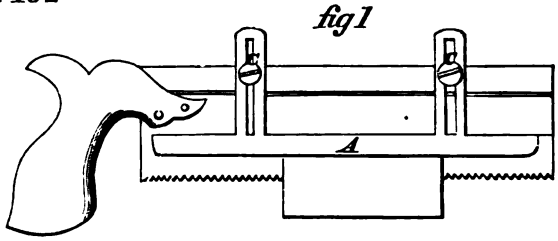

fig 2

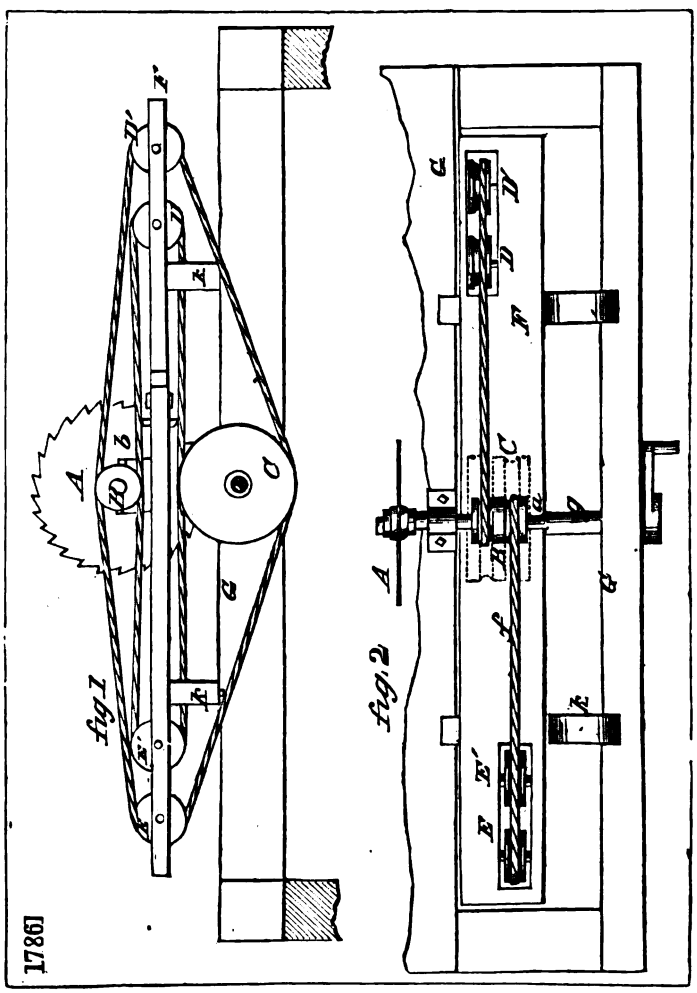

1786]

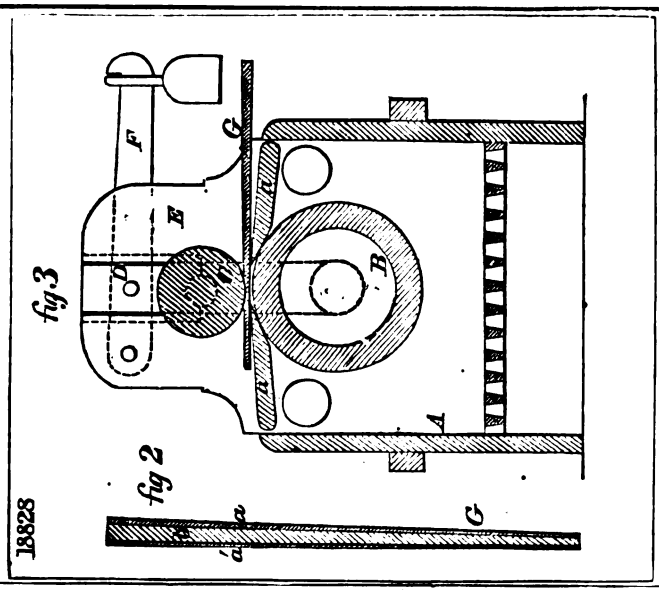

18250

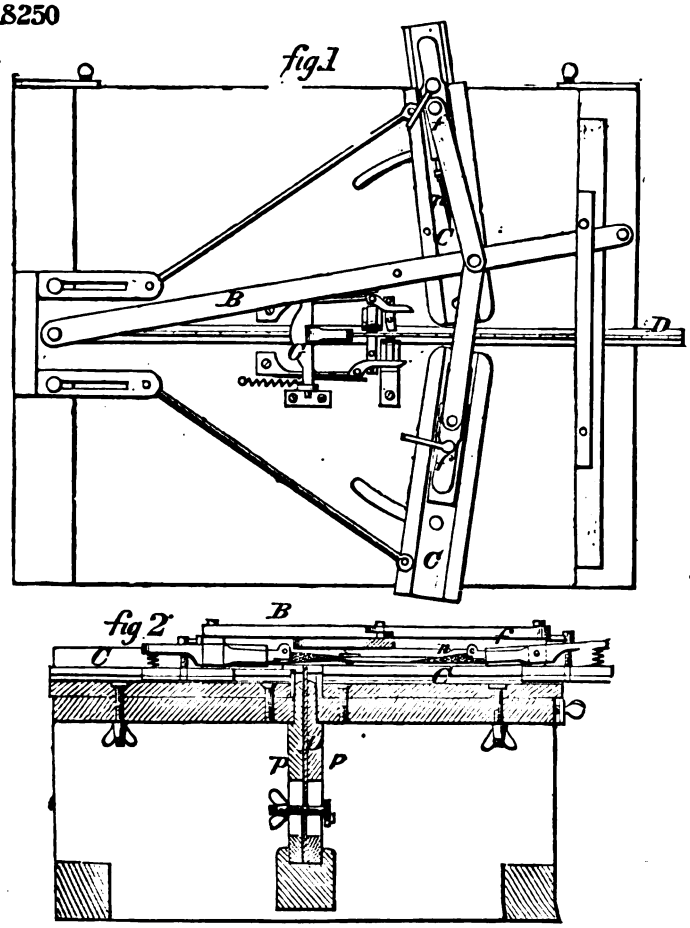

18957

fig.1

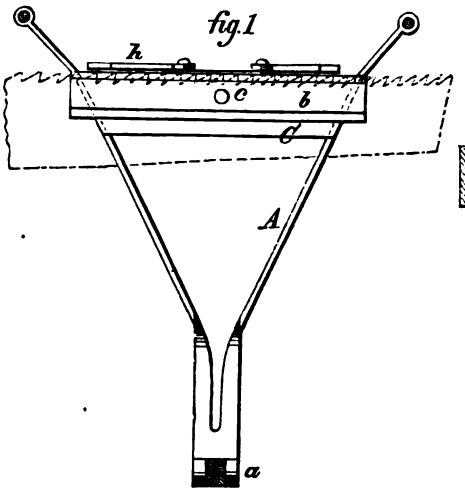

fig.2

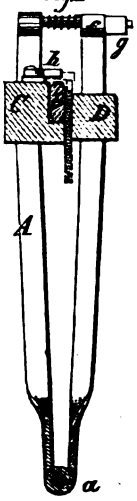

fig.3

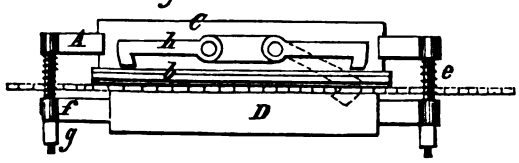

17254

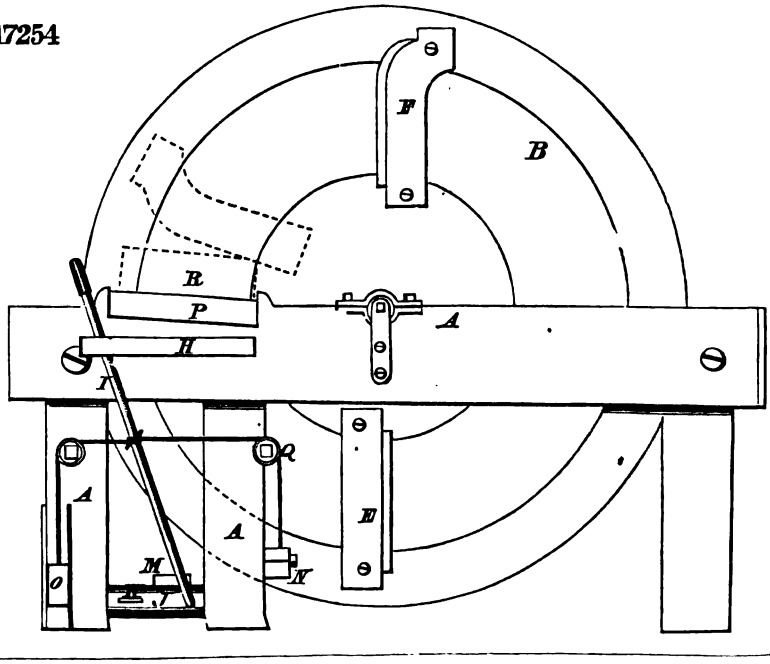

16742

fig 1

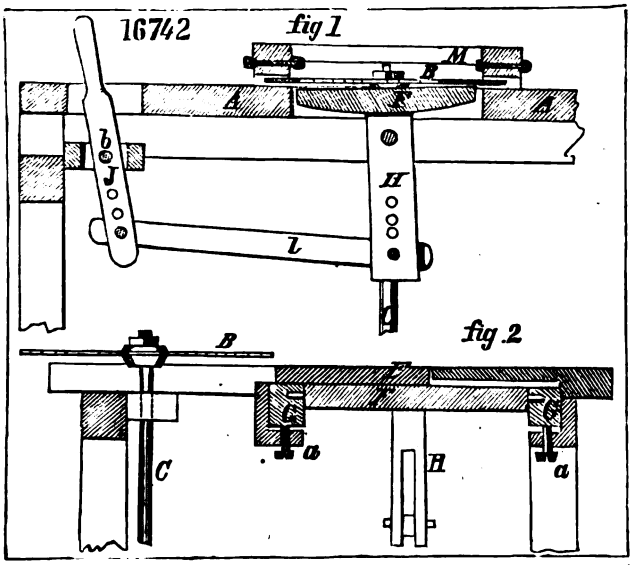

17774

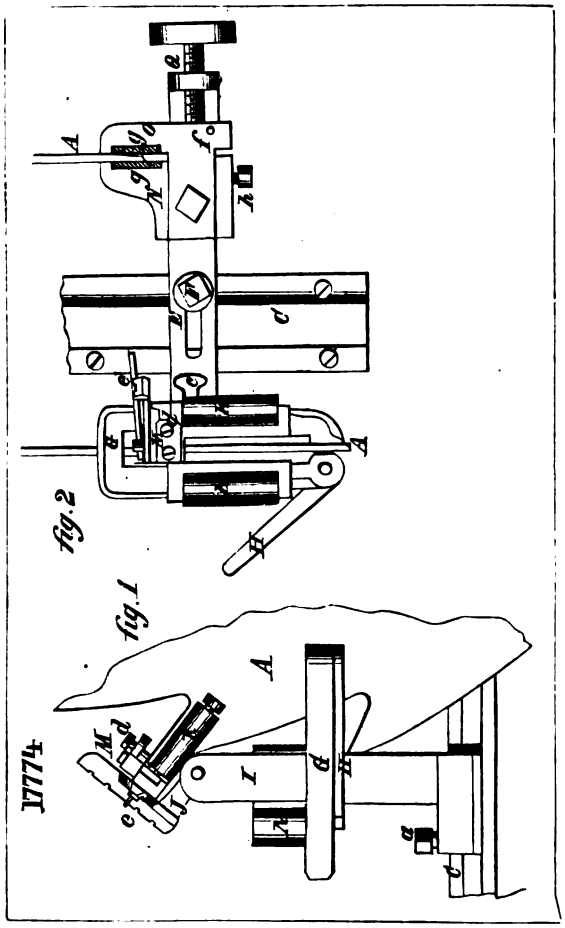

18651

fig. 1

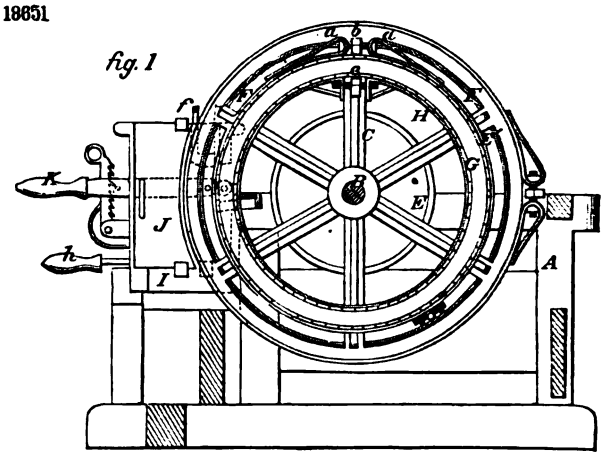

fig. 2

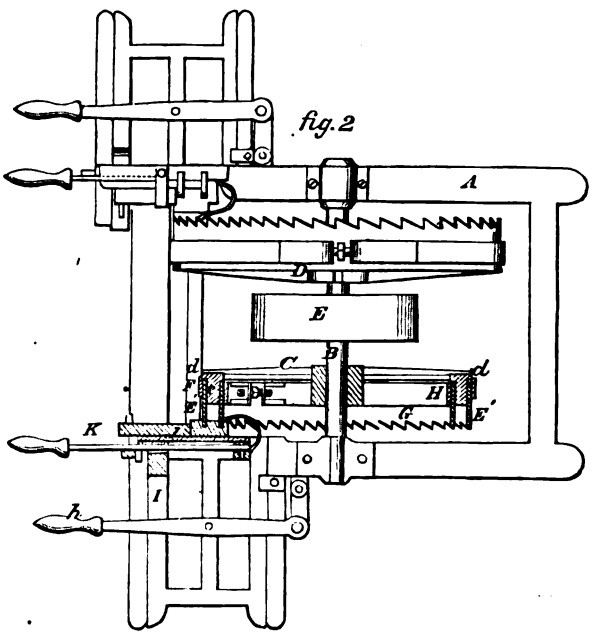

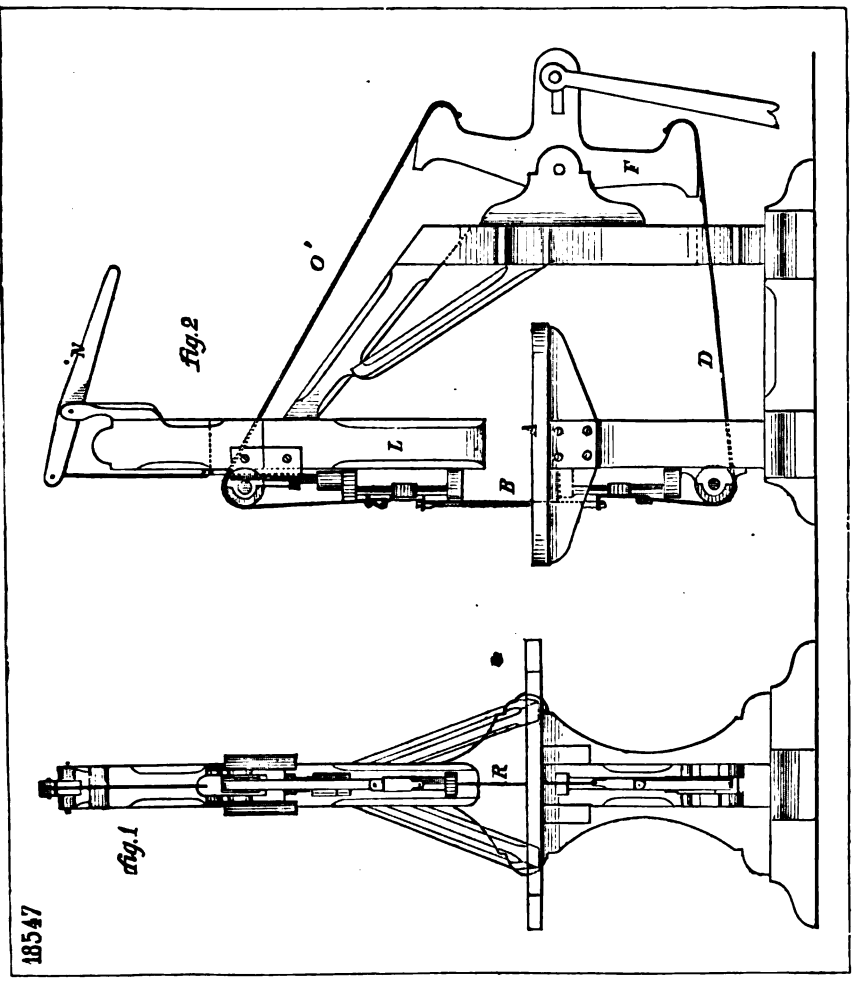
fig.2
fig.1
18547

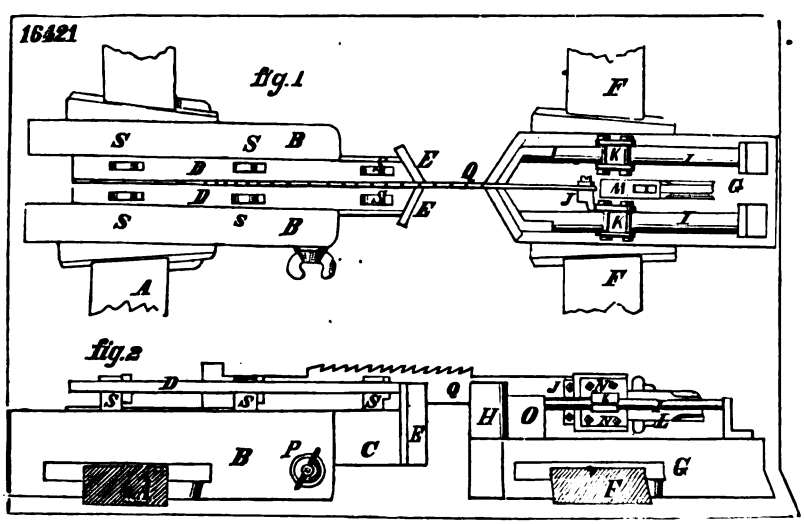
16421
fig.1
fig.2

17110

fig.1

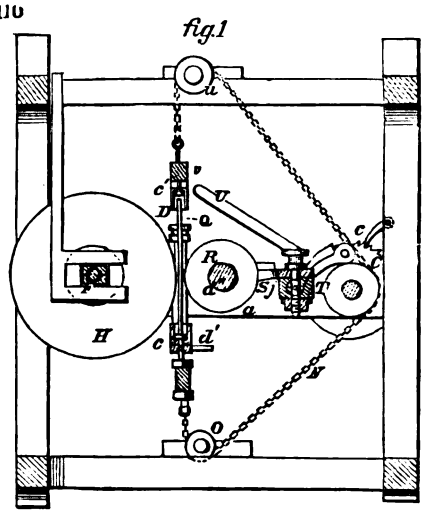

fig.2

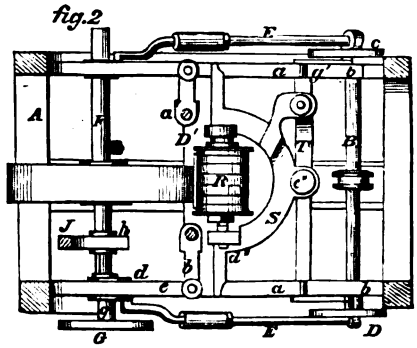

16782

fig.1

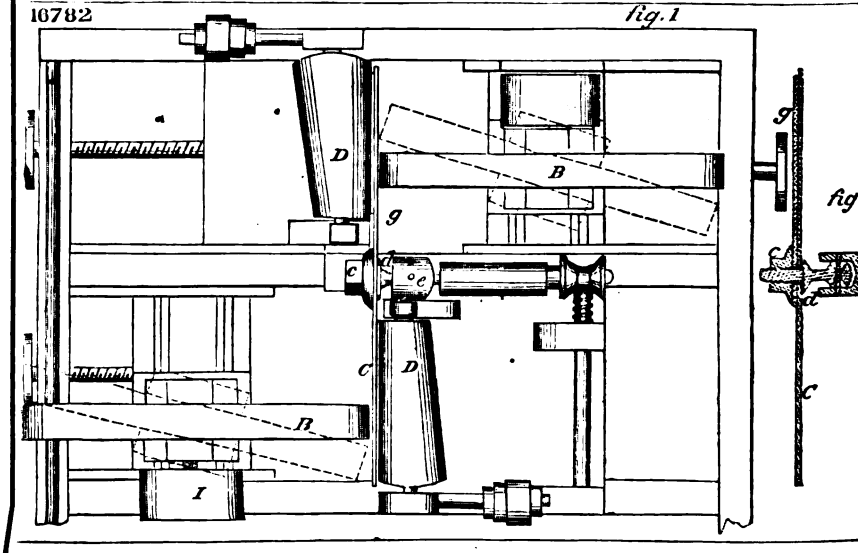

fig

78

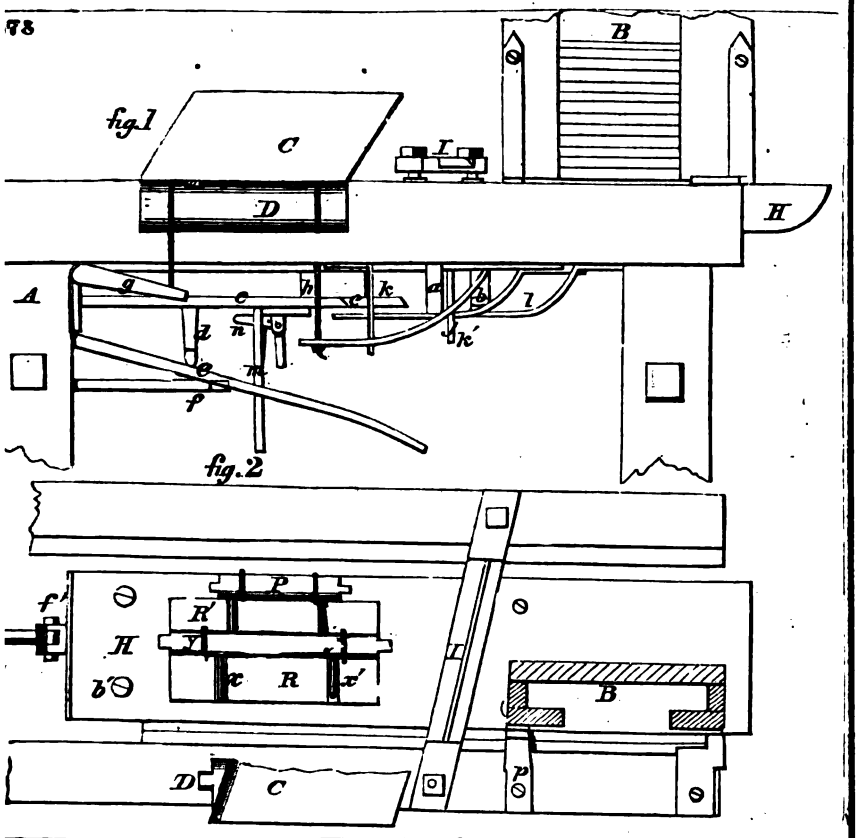
fig.1
C
D
I
B
H
A
g
c
h
k
a
b
l
d
n
e
m
f
k'
fig.2
f'
P
R'
H
y
x
R
x'
b'
I
B
D
C
p

6964

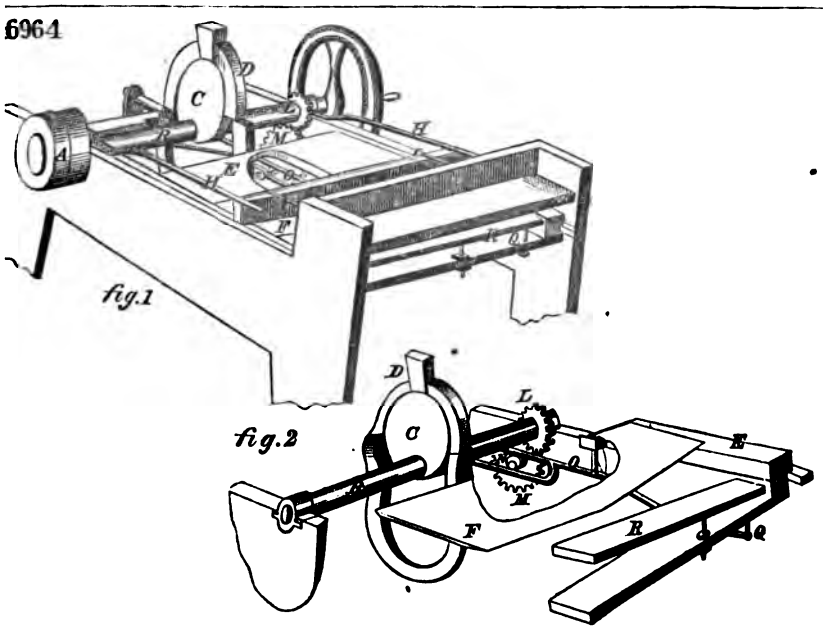
C
D
A
H
E
F
fig.1
fig.2
D
L
C
E
M
F
R
Q

16546

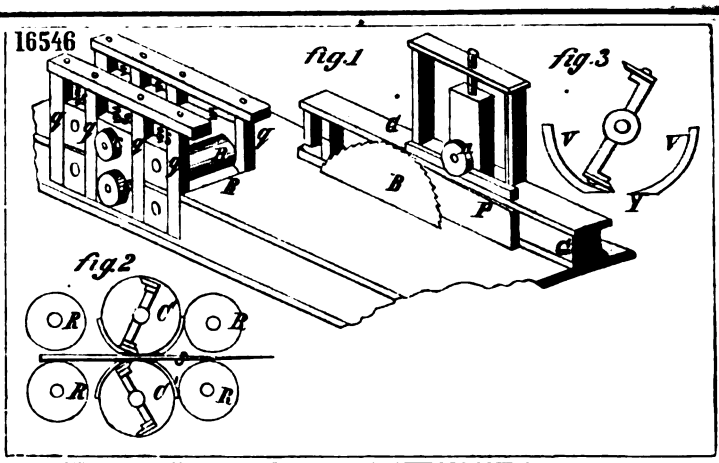

17104

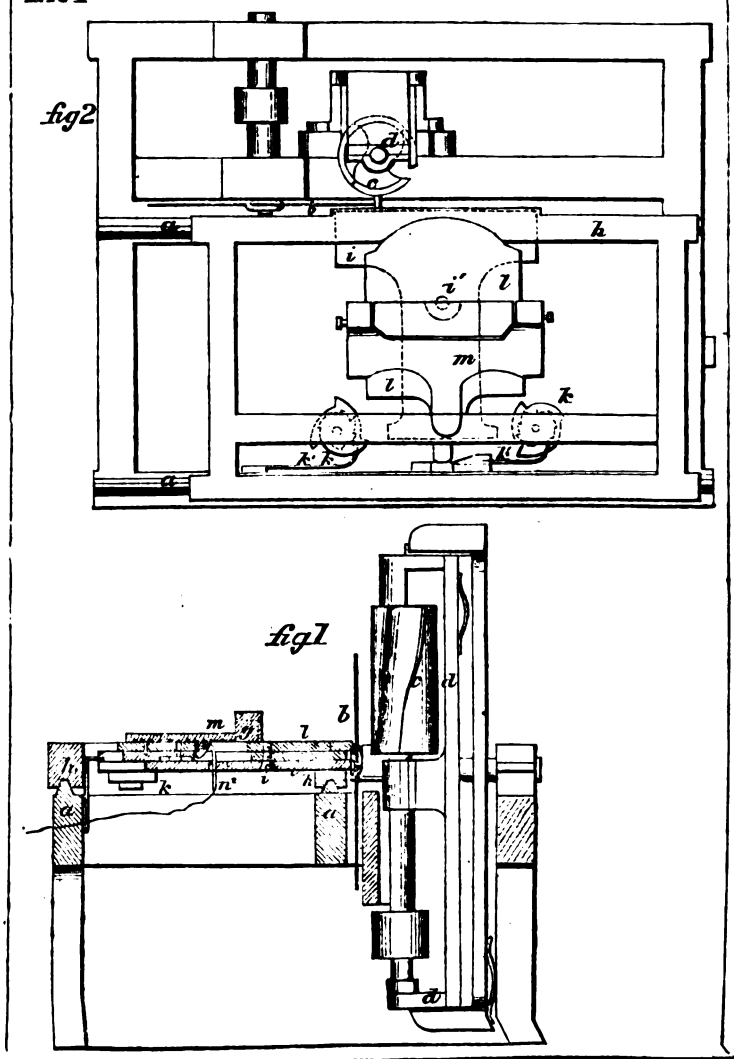

17347

fig.1

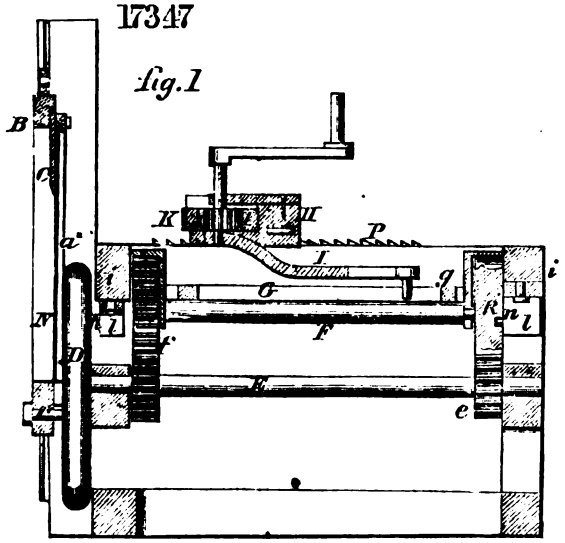

fig.2

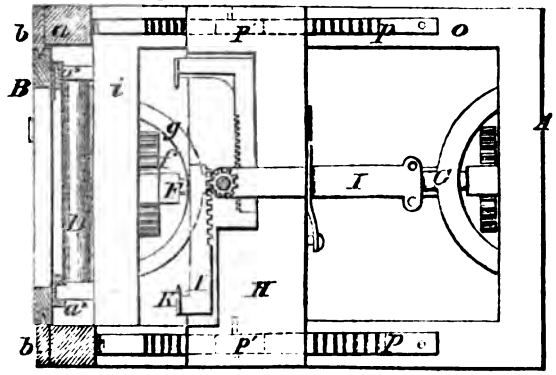

fig.3

fig.4

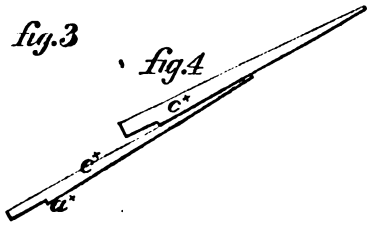

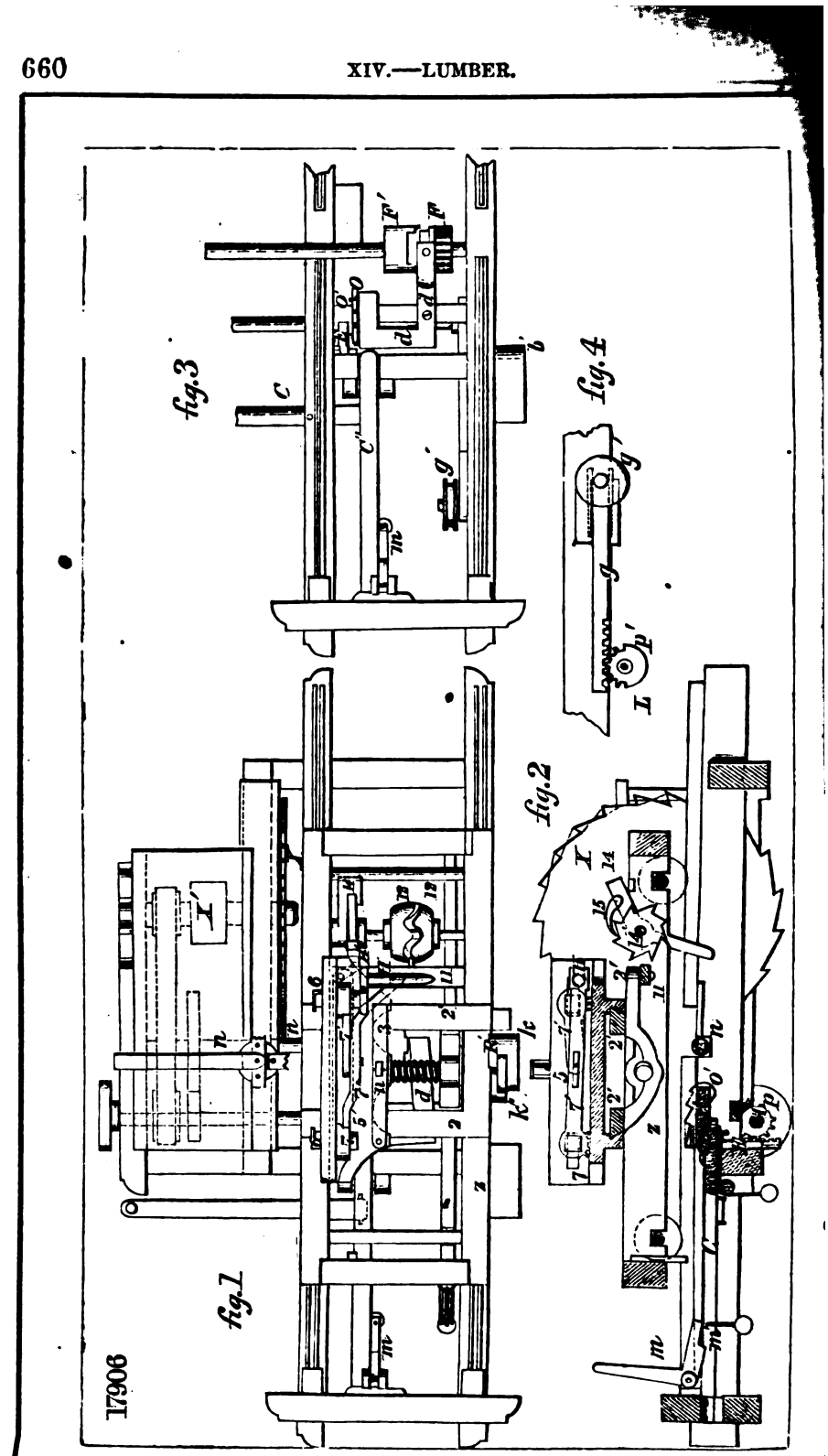
fig.3
fig.4
fig.2
fig.1
17906

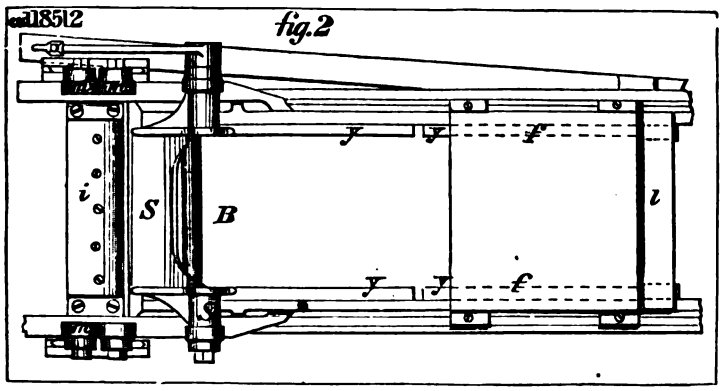
18512
fig.2
i
S
B
l

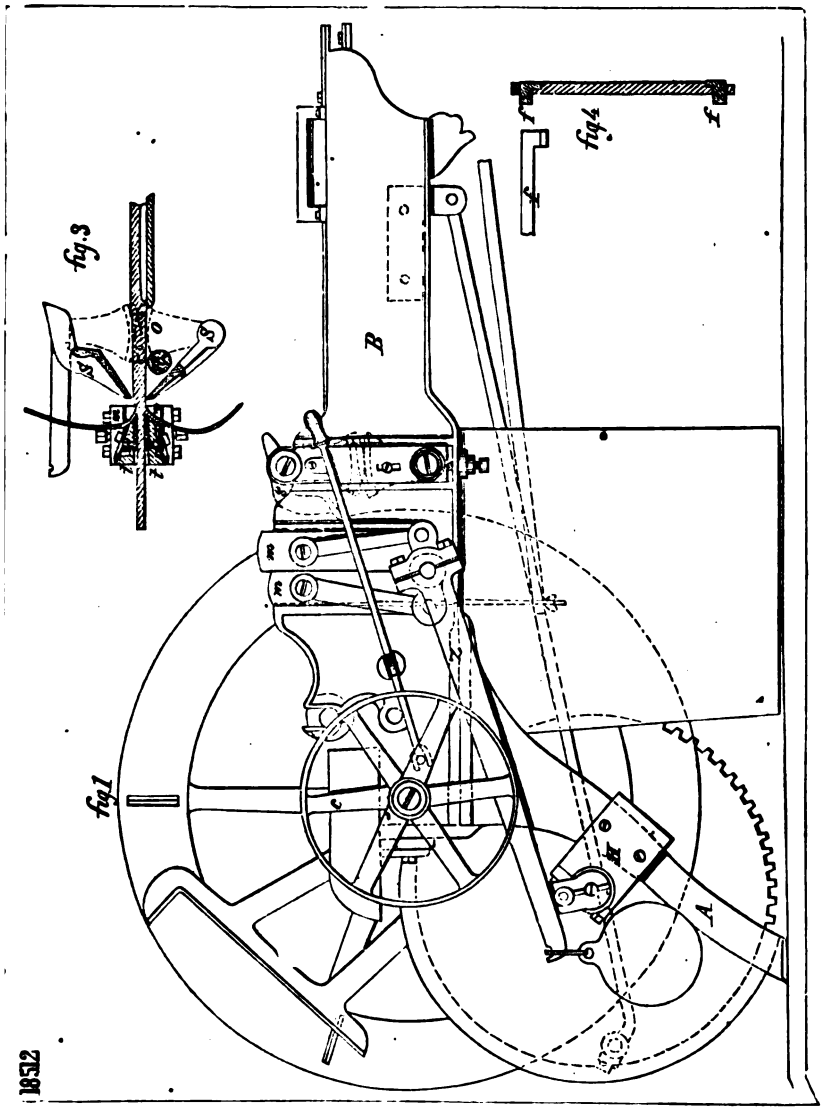
fig.4
fig.3
B
fig1
18512

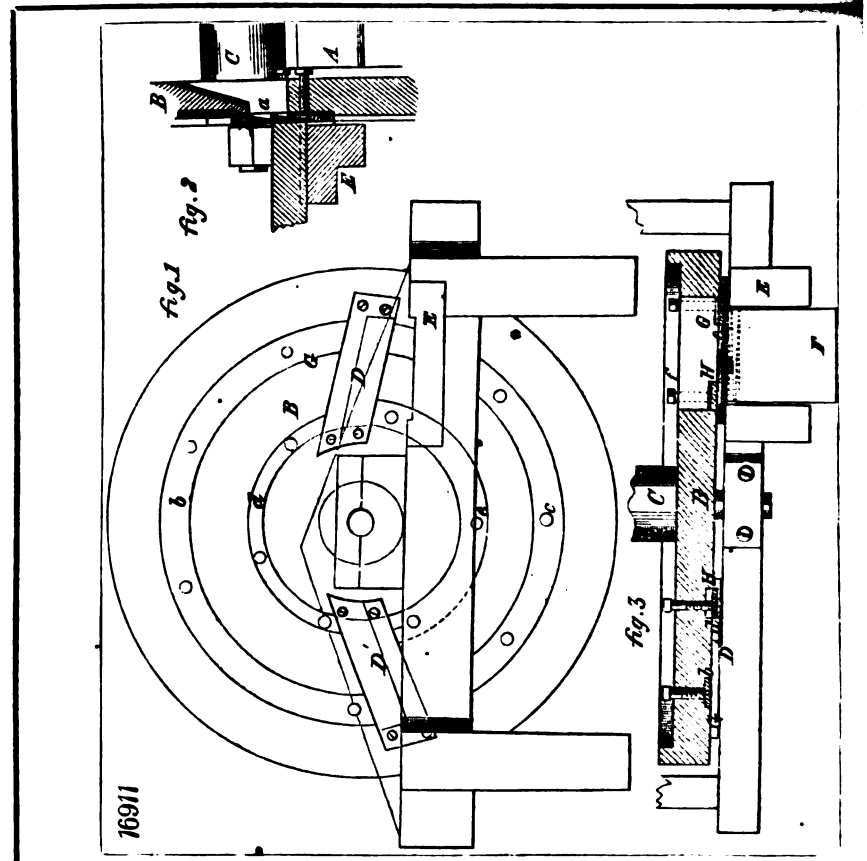
16911
Fig.1
Fig.2
Fig.3

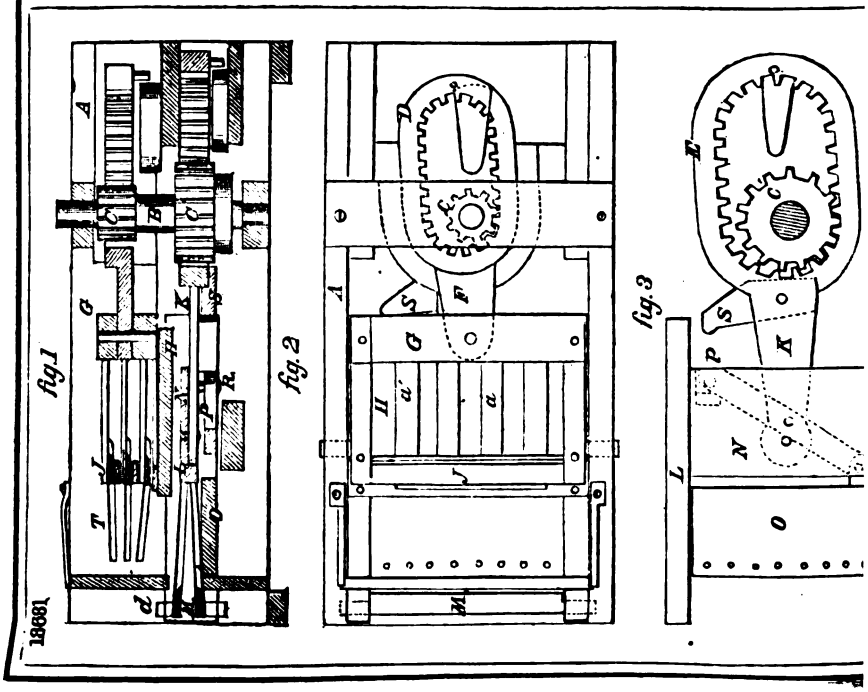
13681
fig.1
fig.2
fig.3

18679

fig. 1

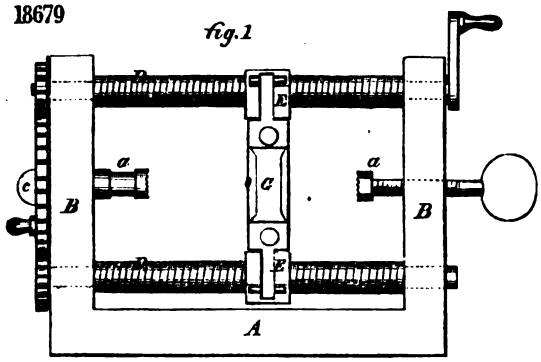

fig. 2

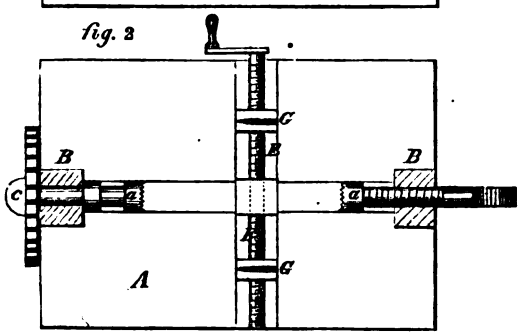

fig. 3

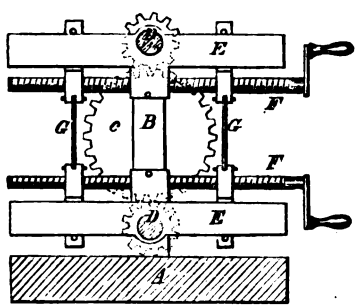

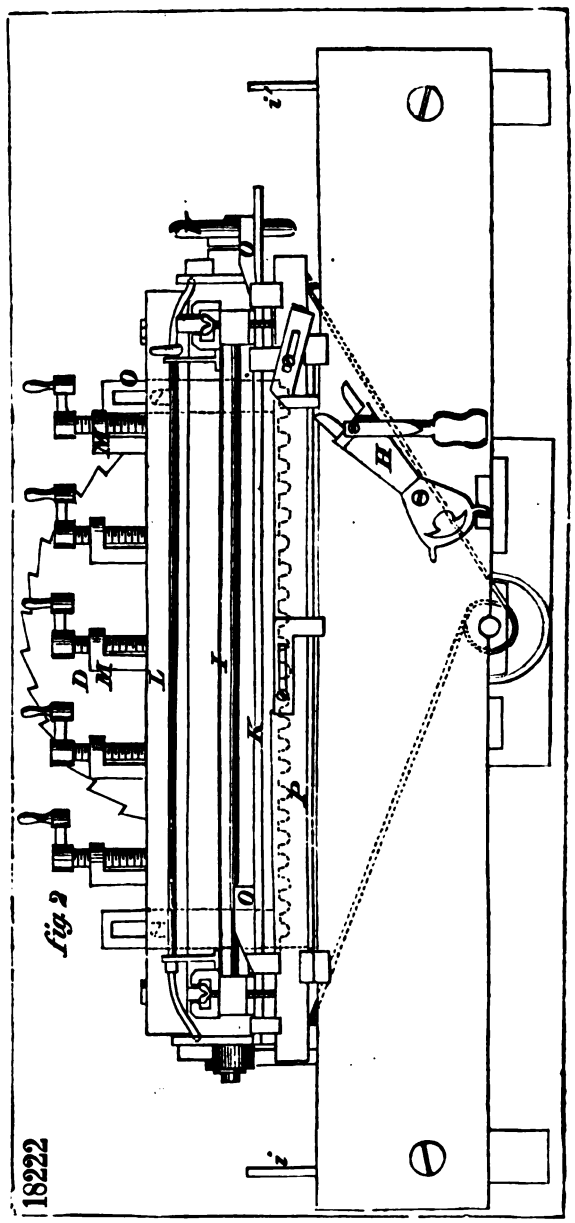
18222
fig 2
D
M
L
I
K
H
O

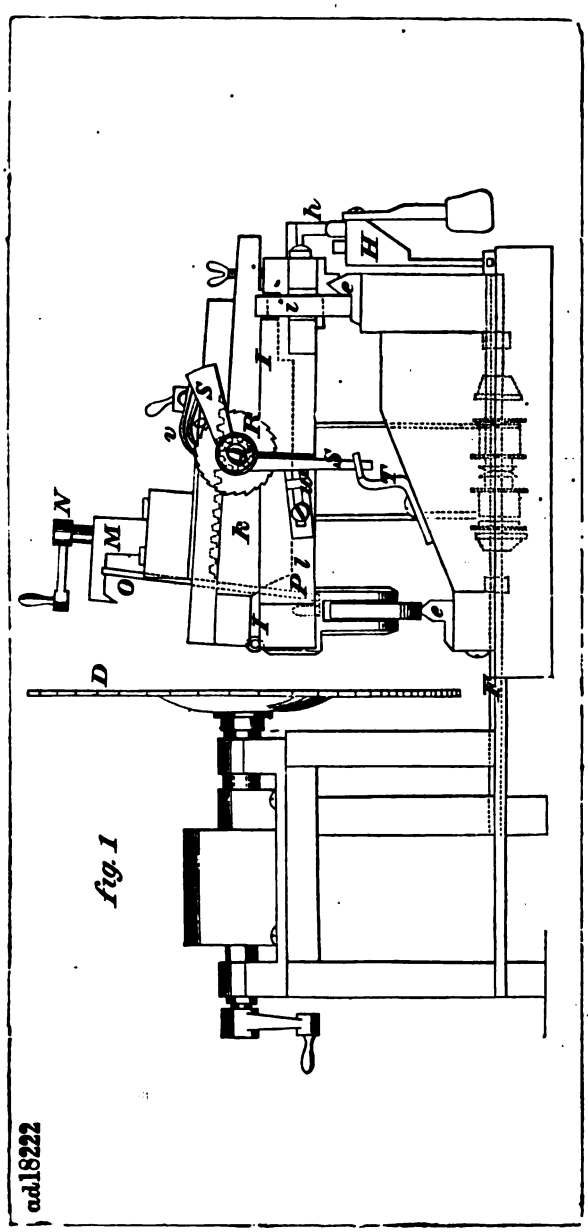

fig. 1

o.d.18222

18207

fig. 1

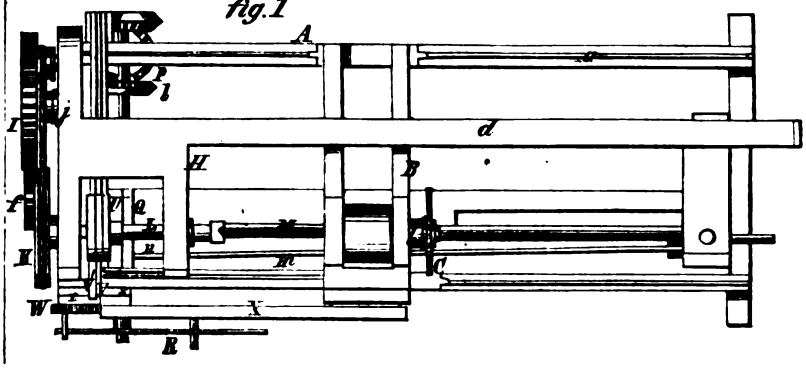

fig. 2

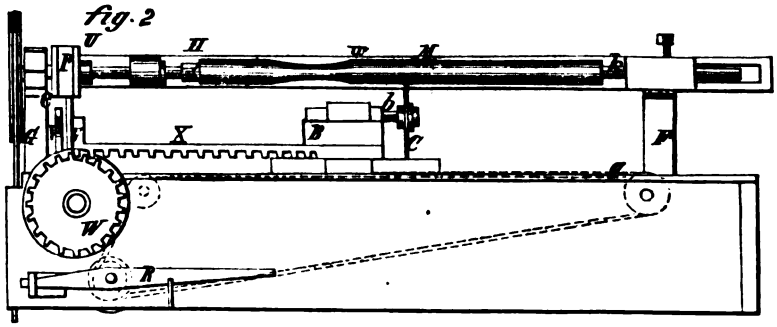

fig. 3

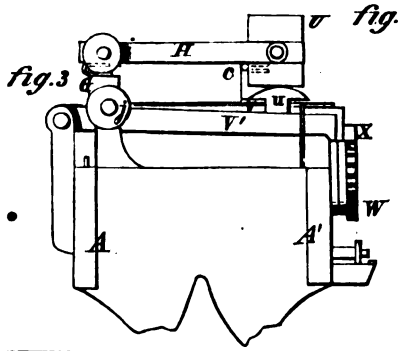

fig. 4

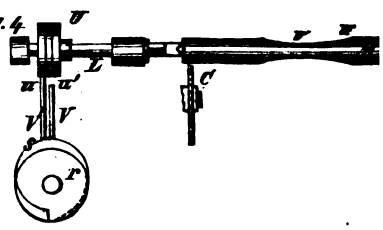

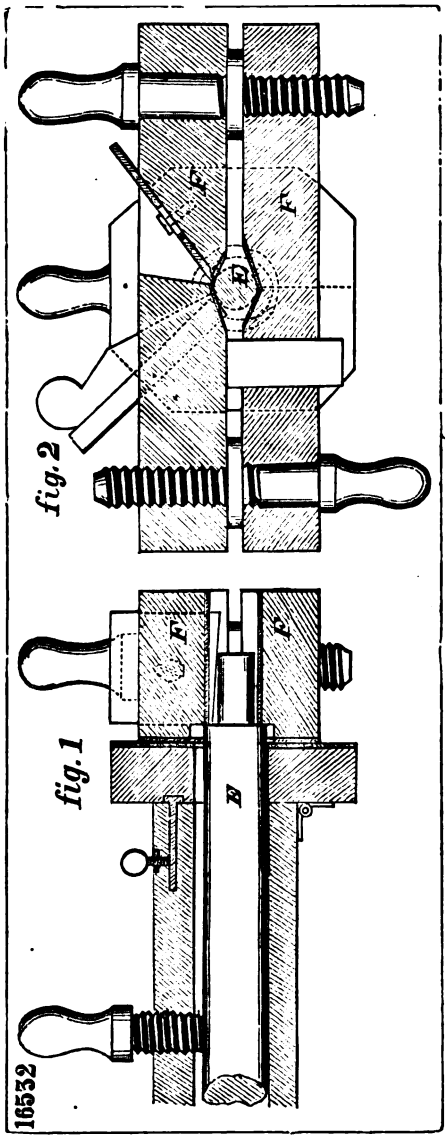

17111

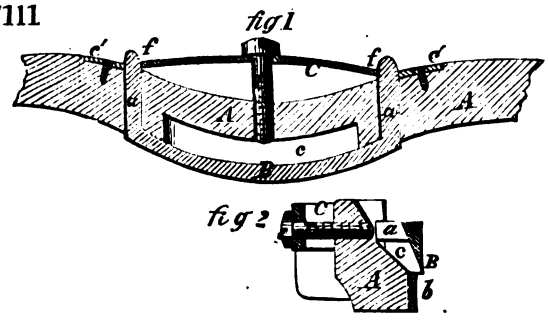

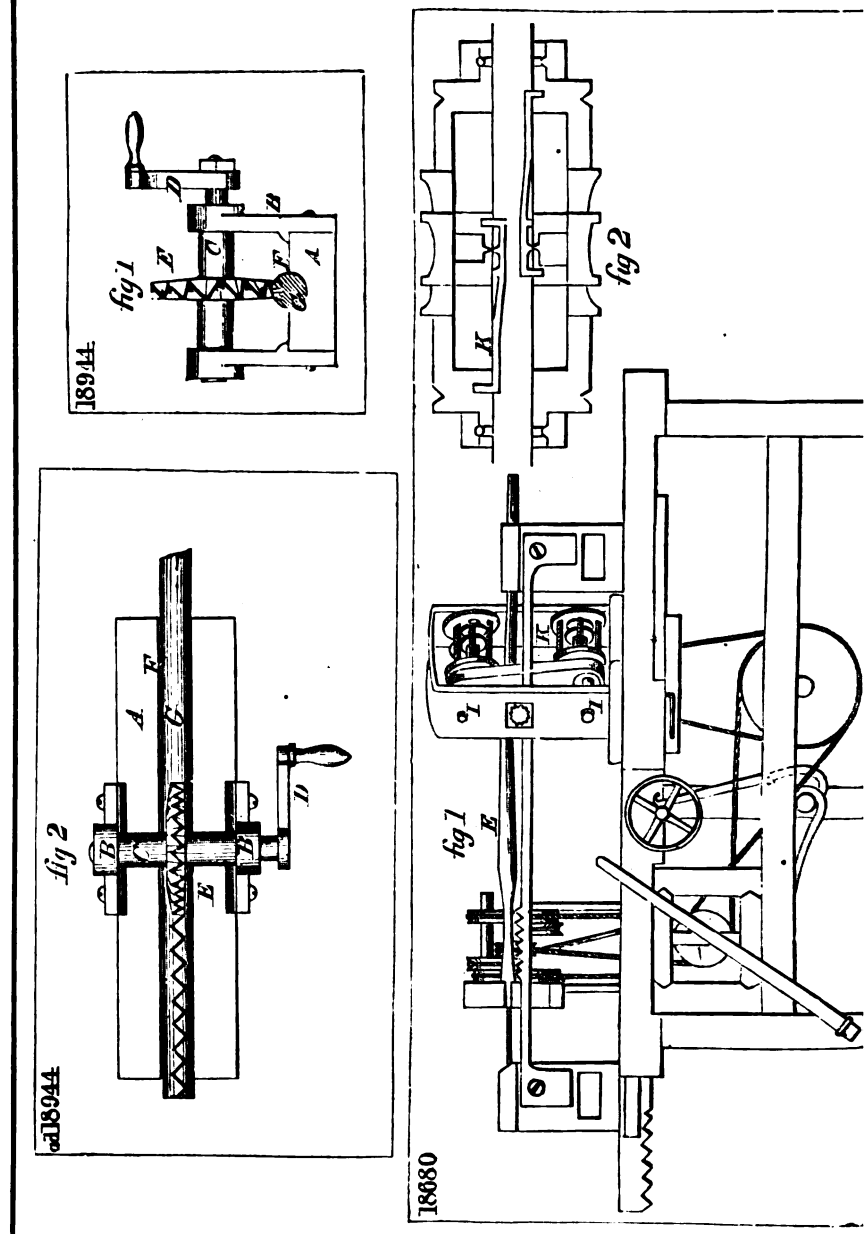
18944
fig 1
18944
fig 2
18680
fig 1
fig 2

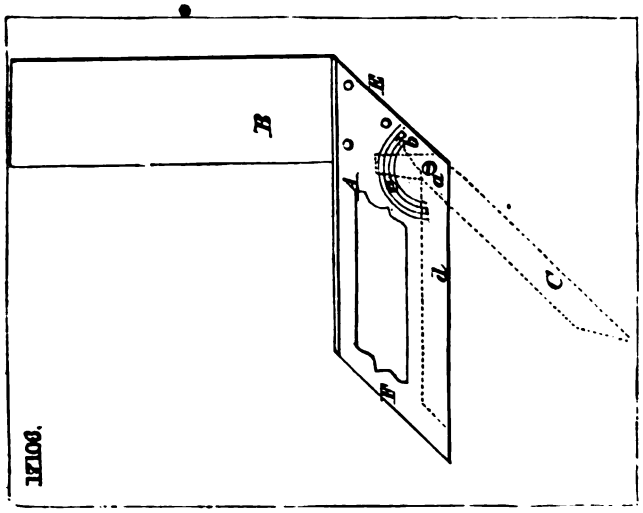

16857

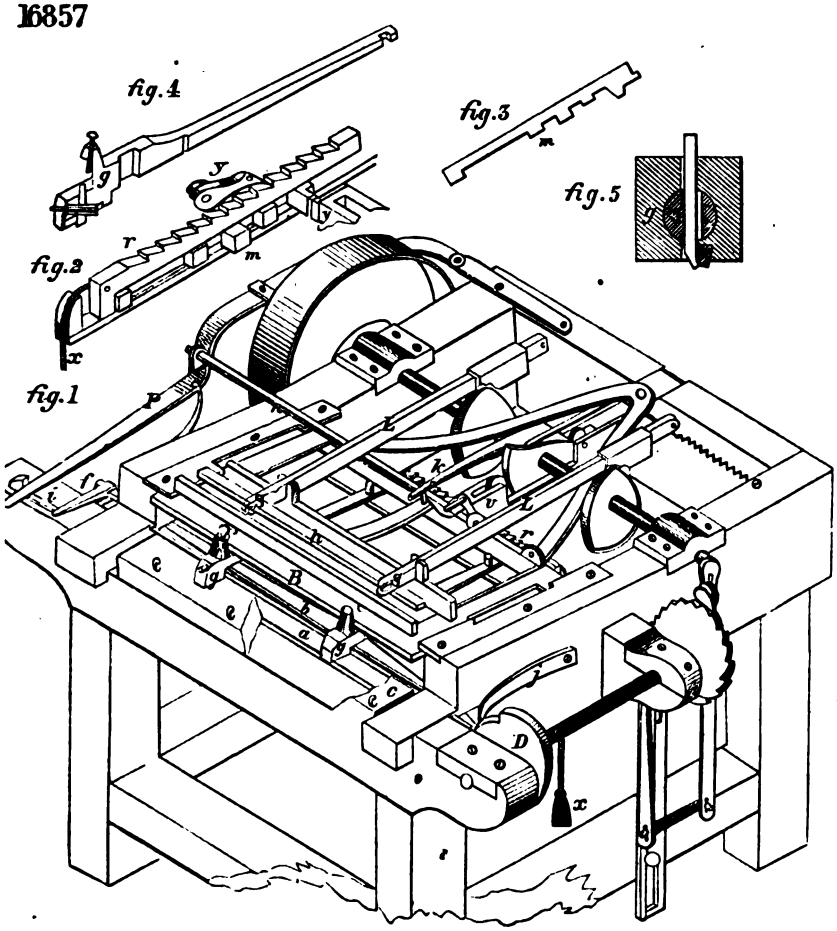

17175

fig.2

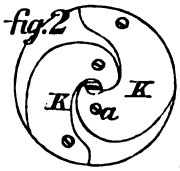

fig.3

fig.1

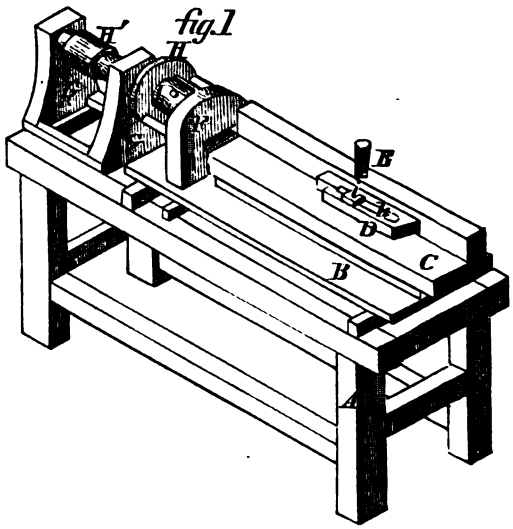

17907

fig.1

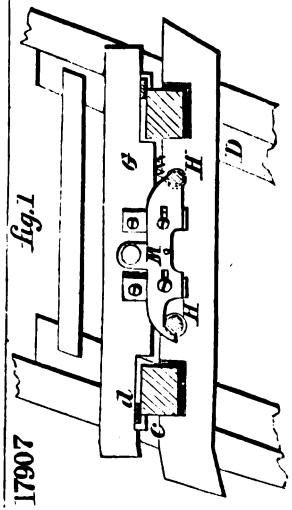

fig.2

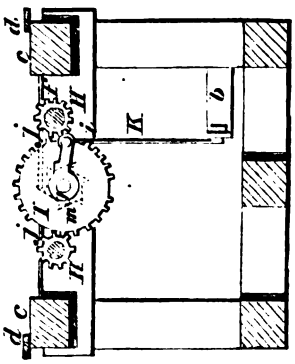

fig.3

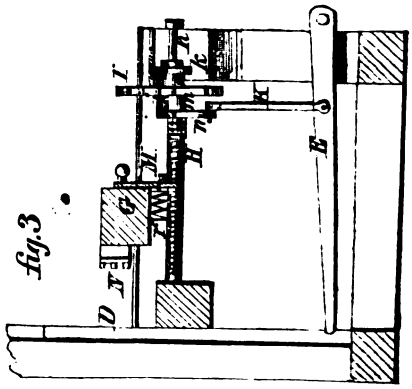

16953

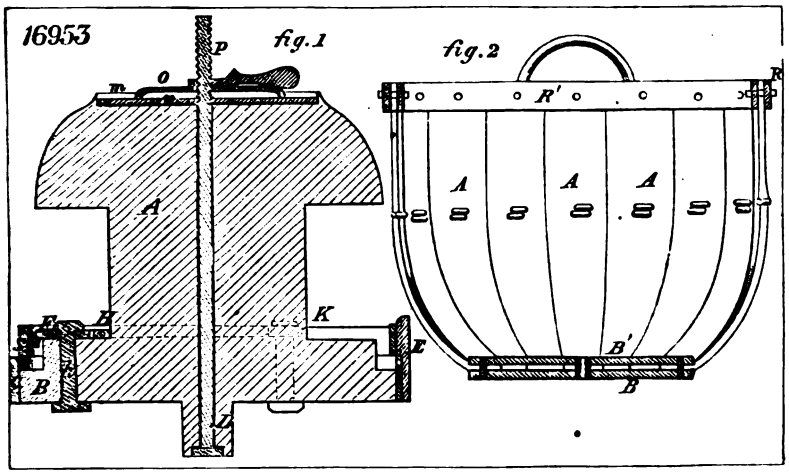

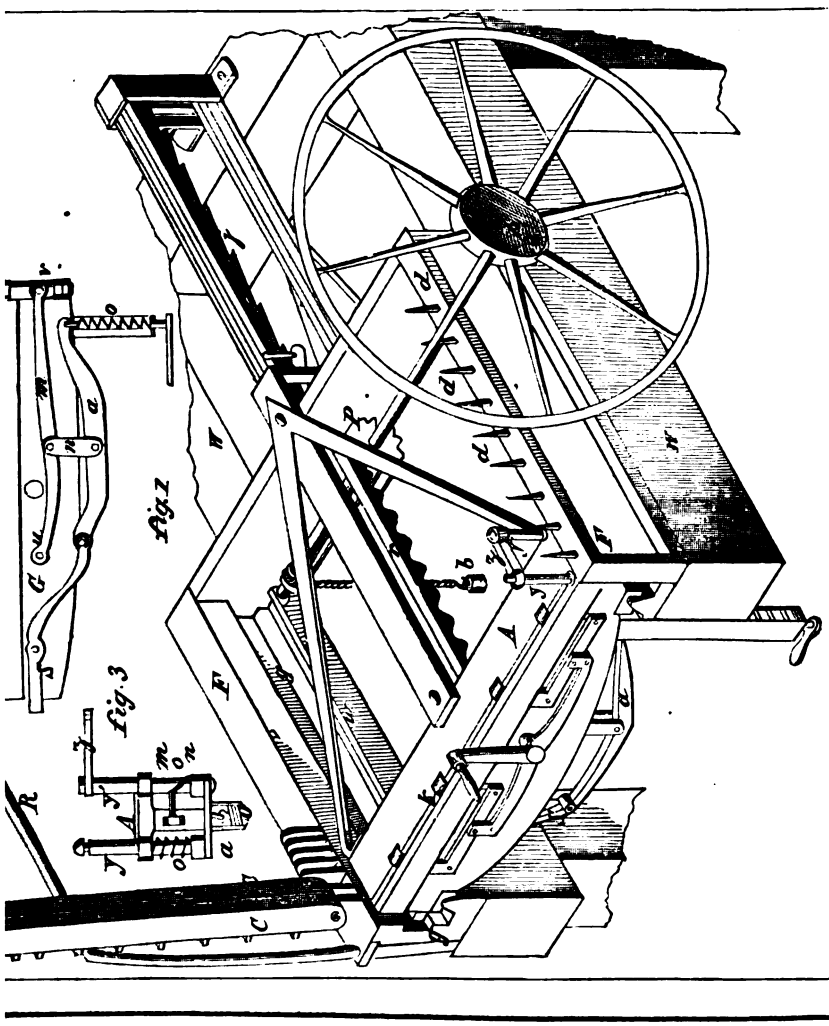

16746

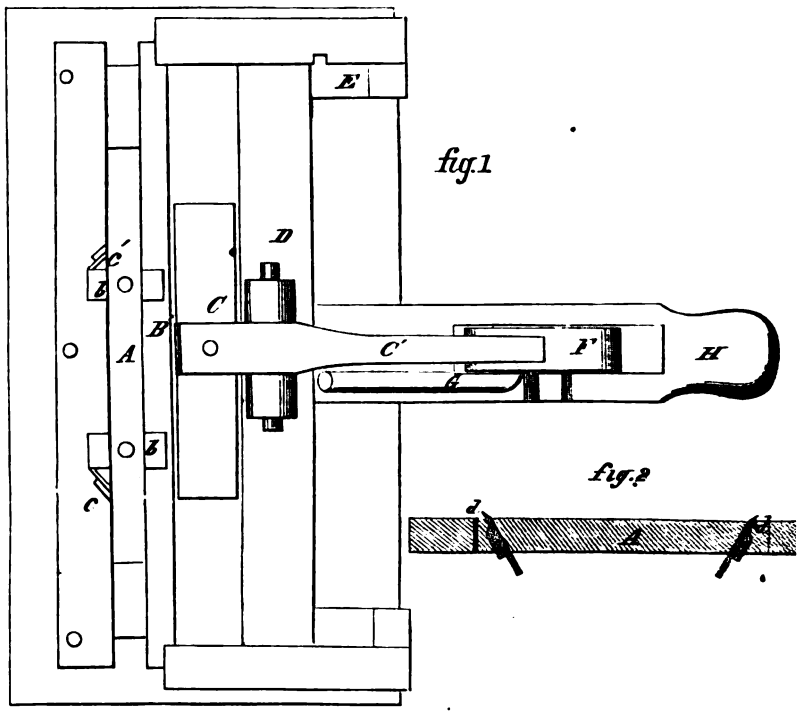

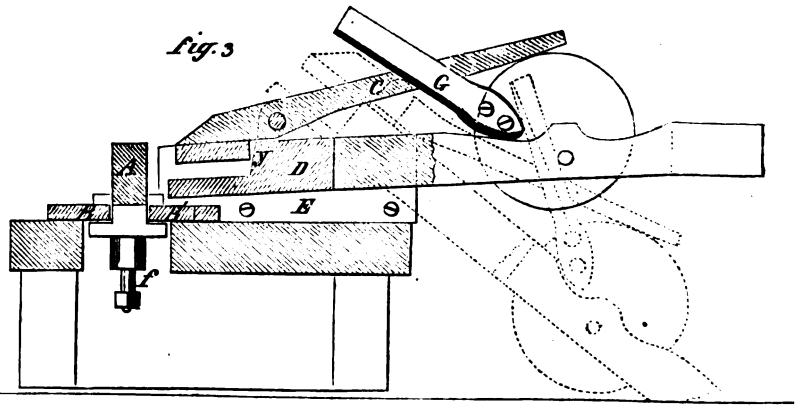

18123

fig. 1

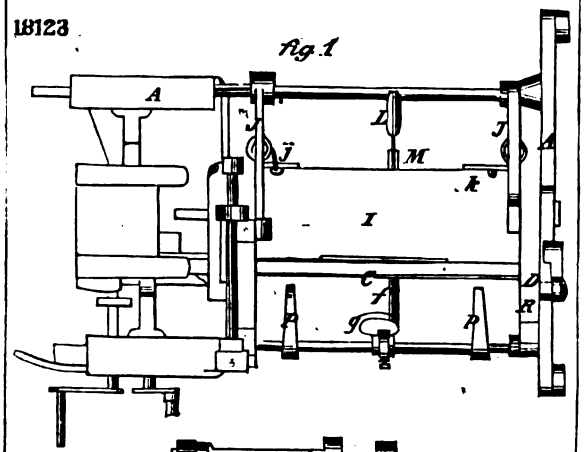

fig. 2

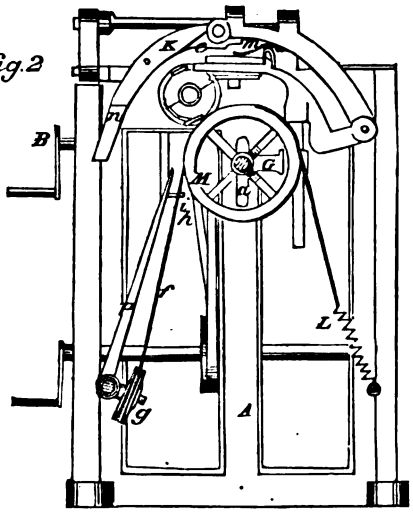

17992

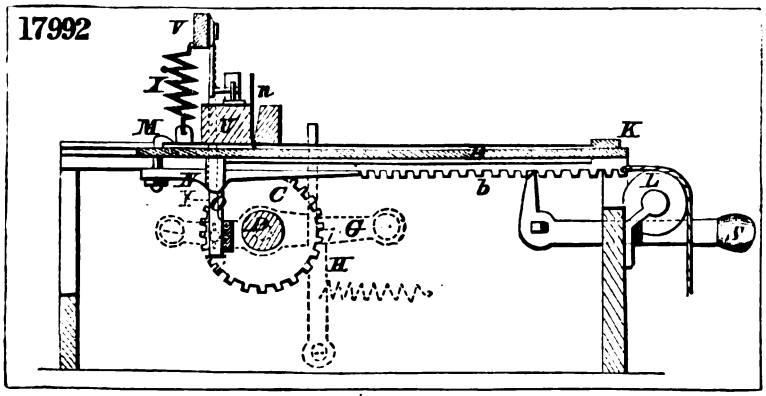

17871.

fig.1

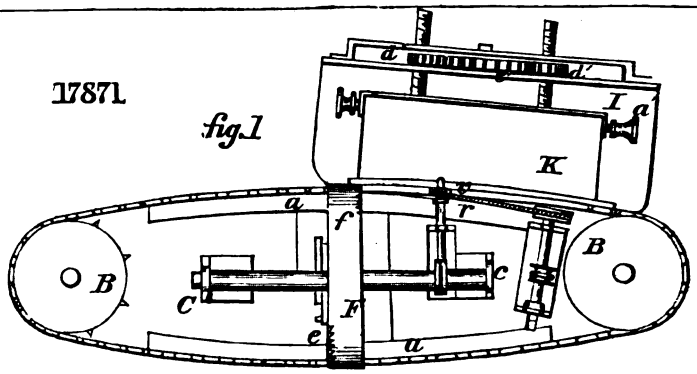

fig.2

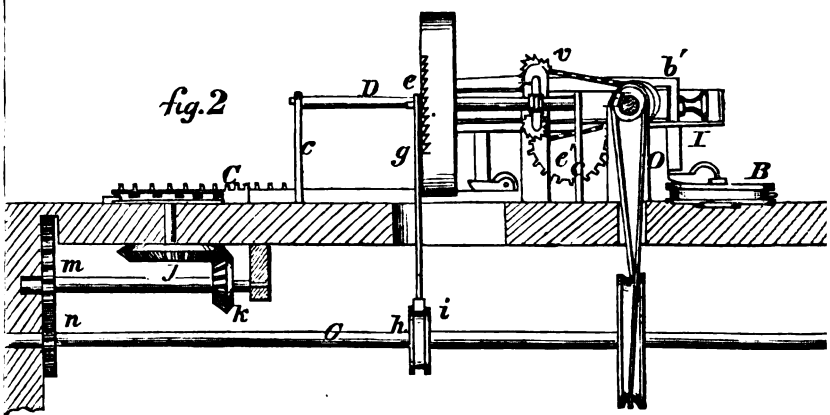

fig.3

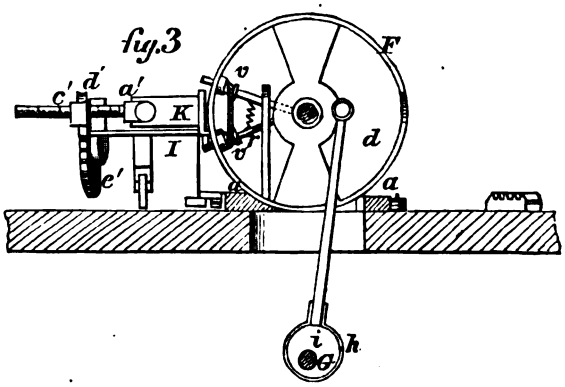

1088

fig.1

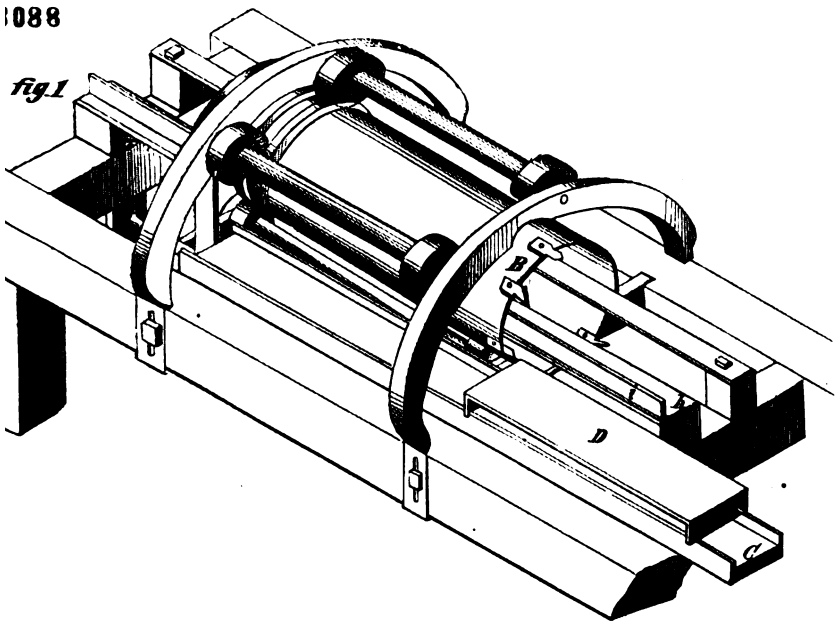

fig.2

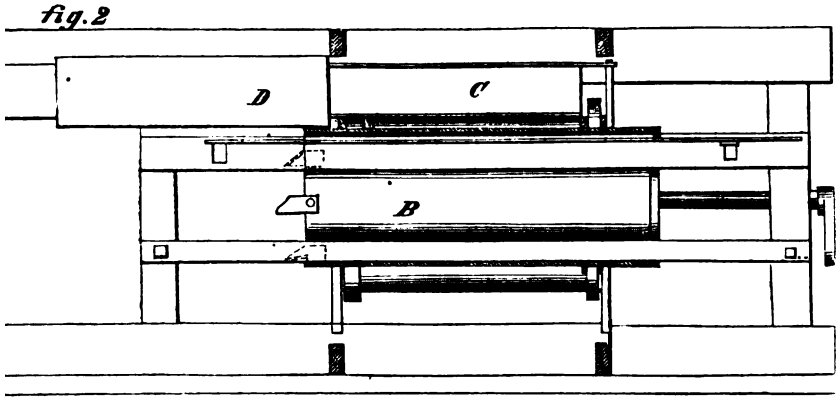

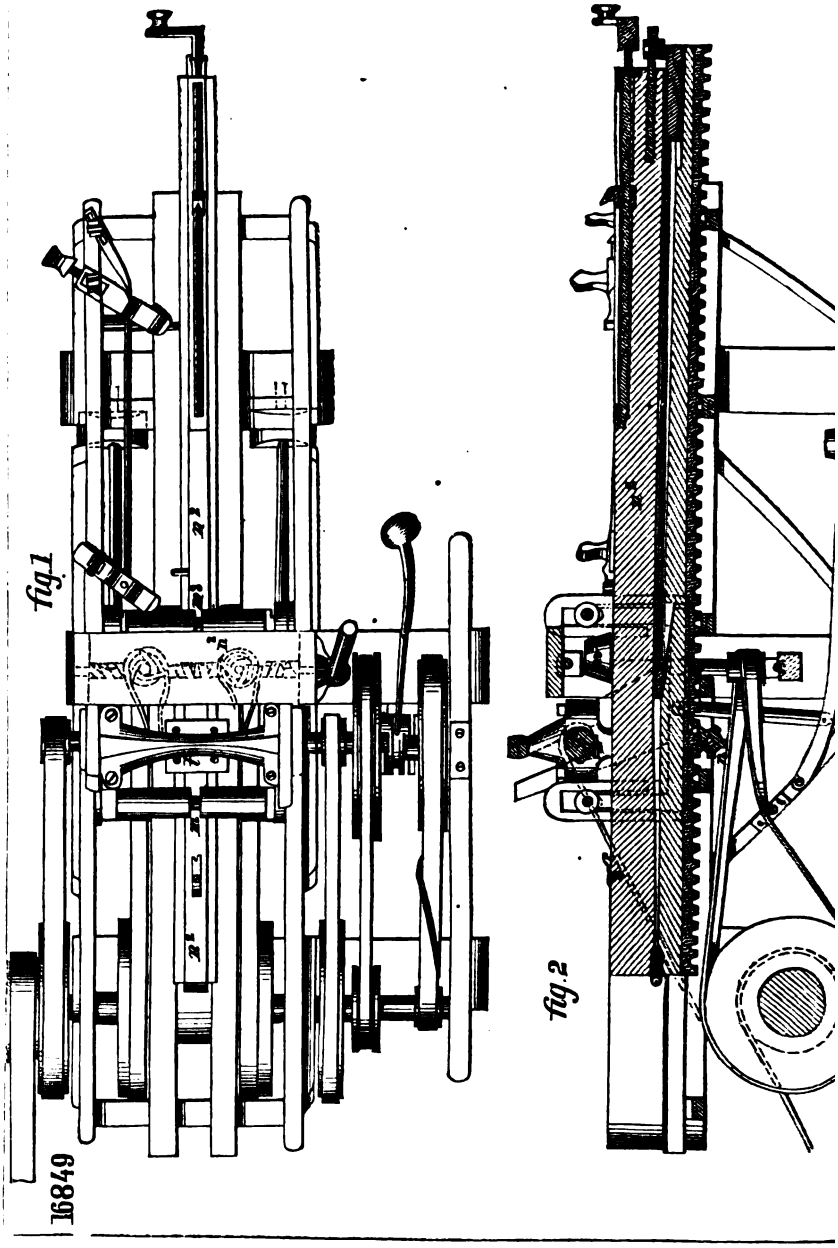
fig.1
fig.2
16849

18974

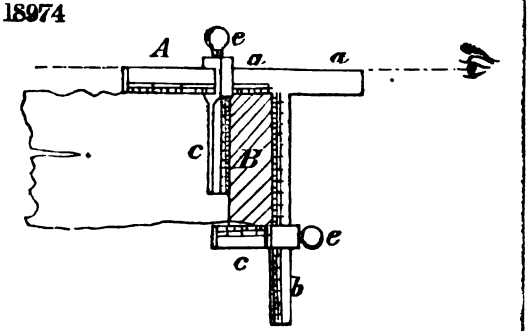

17946

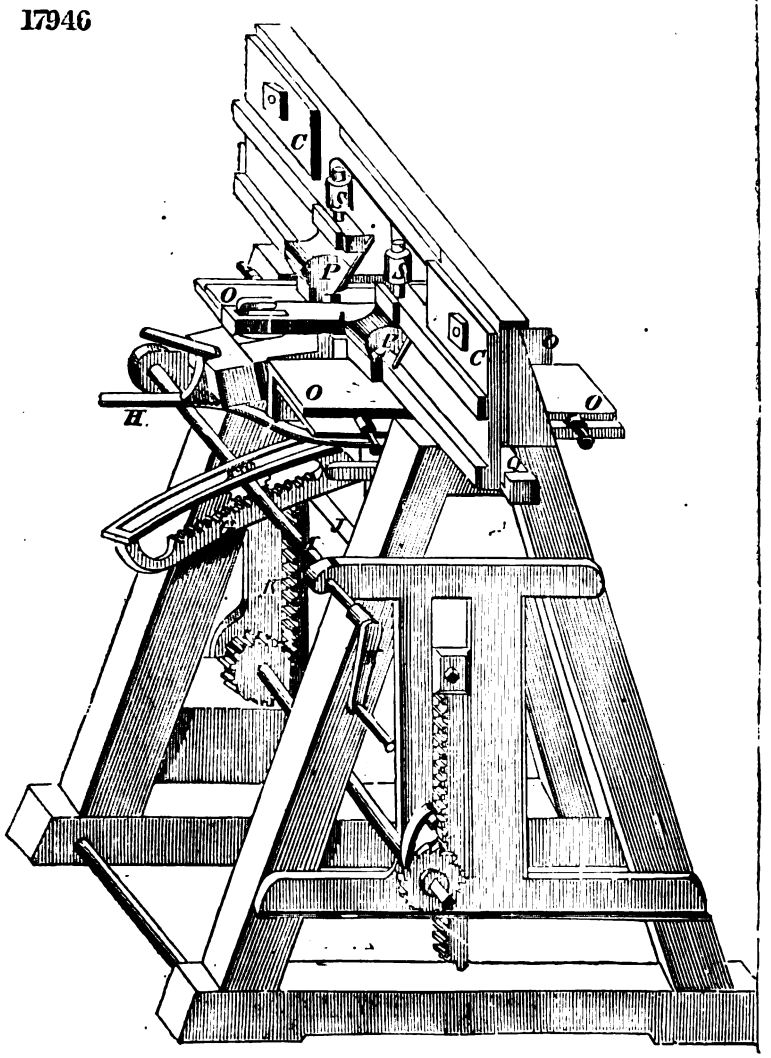

17816

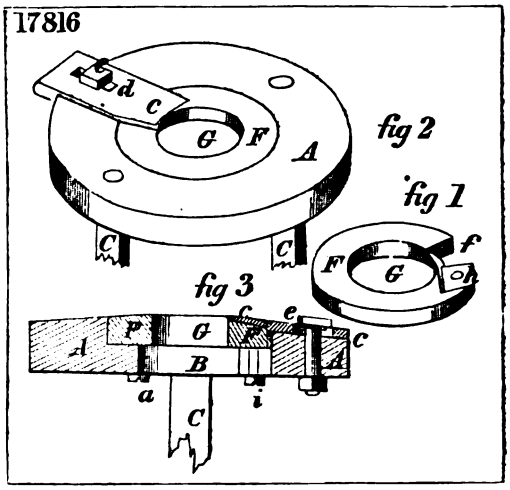

16534

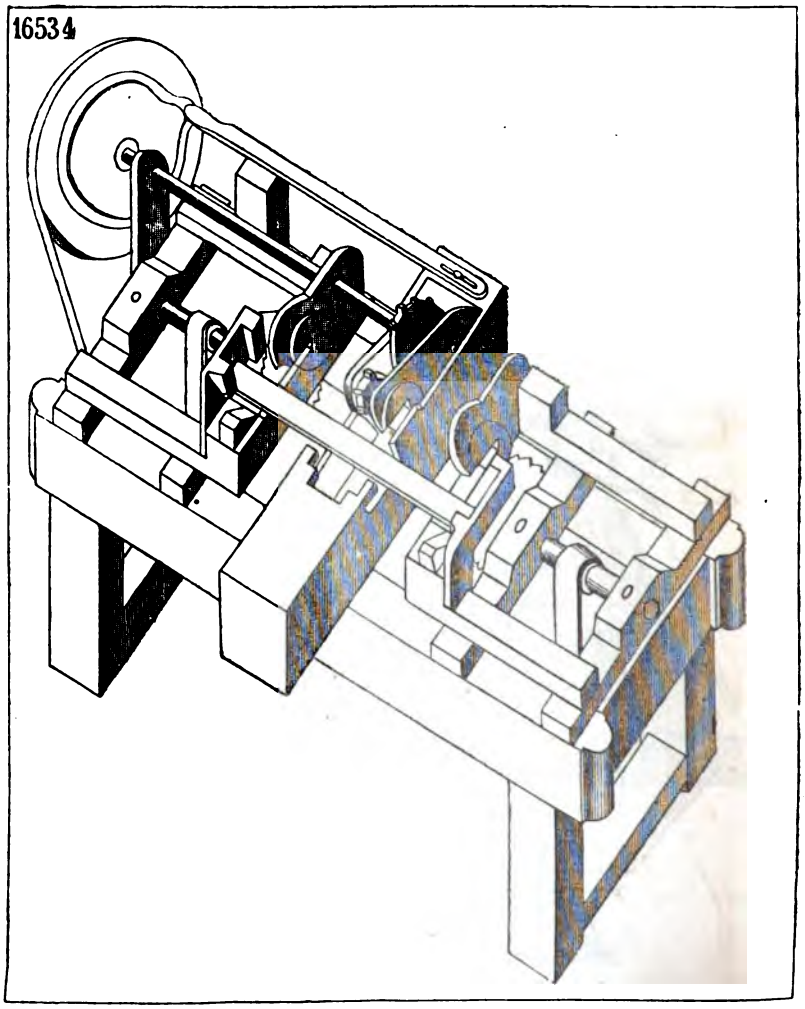

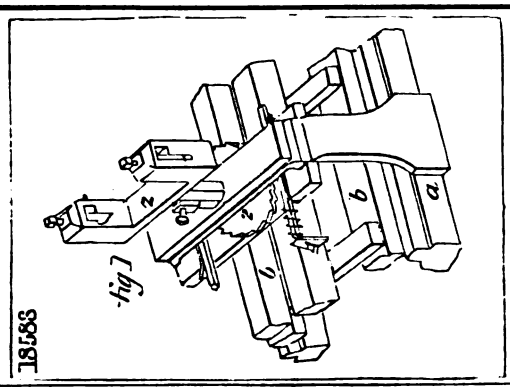

01

Fig.1

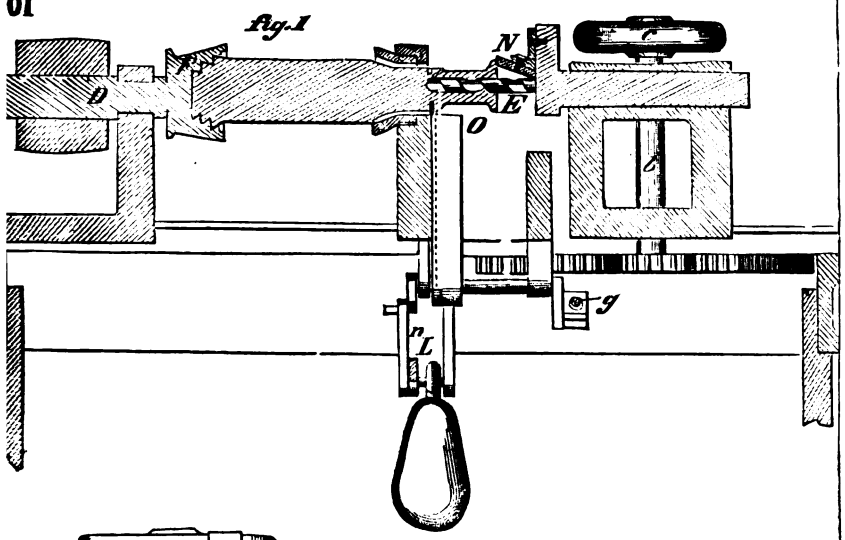

Fig.2

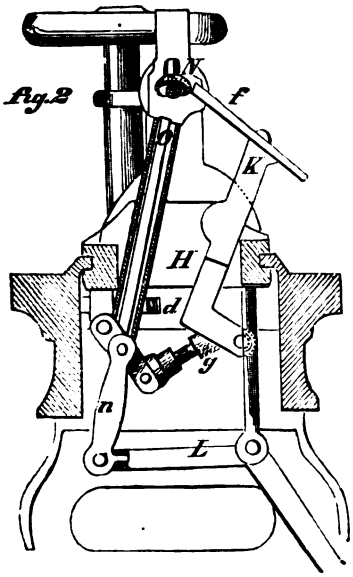

fig.4

Fig.3

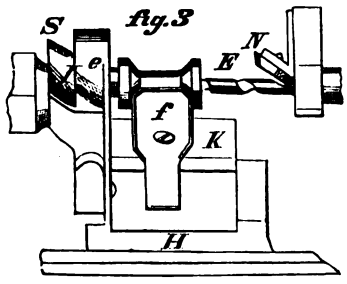

17958

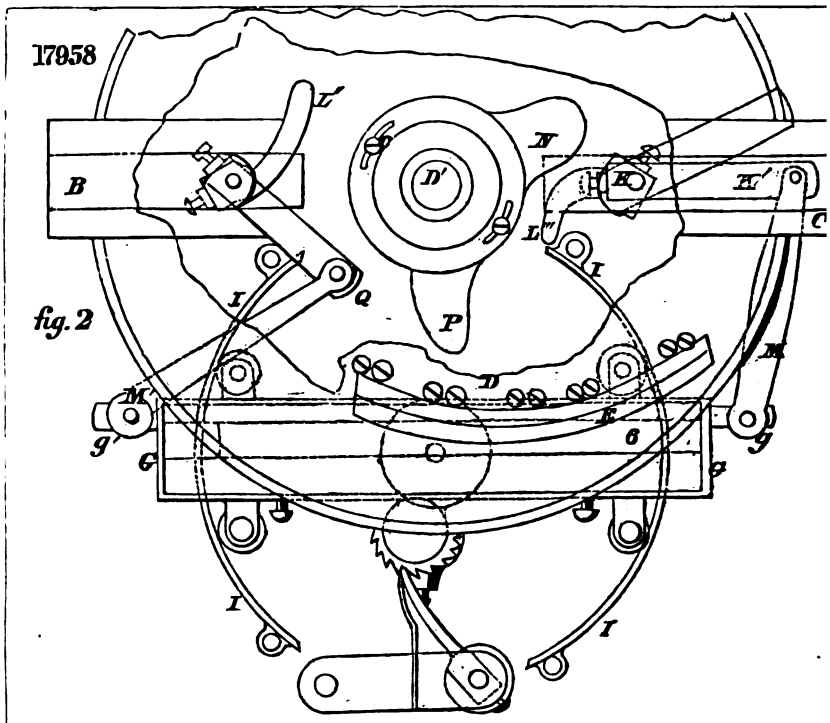

fig. 2

fig. 1

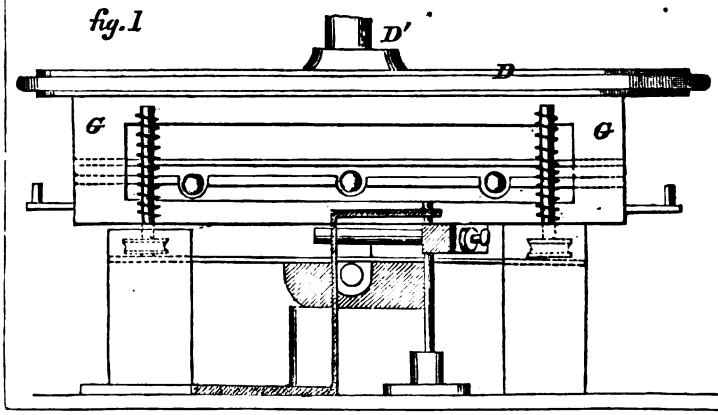

16529

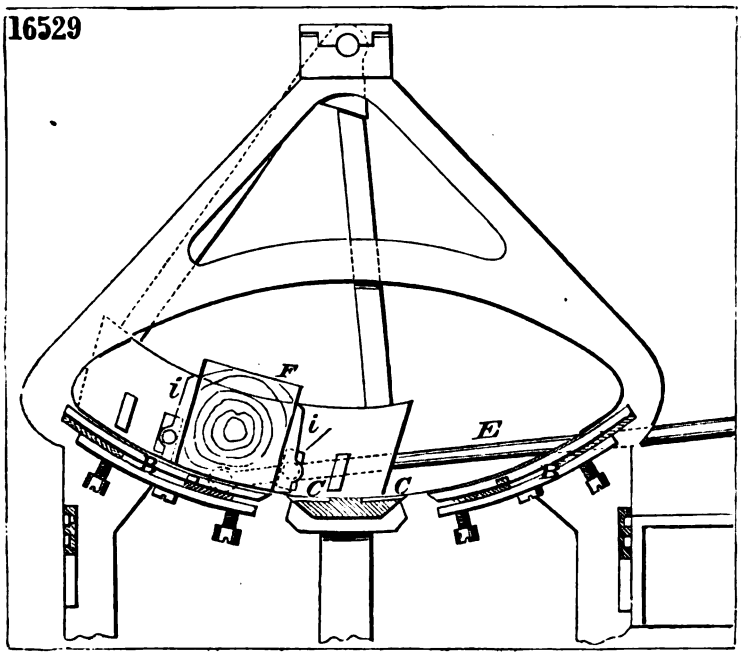

16705

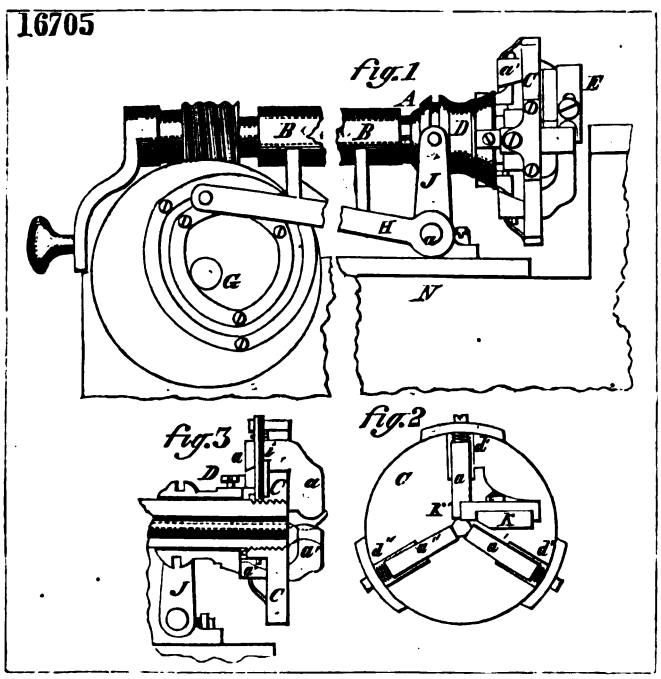

17736

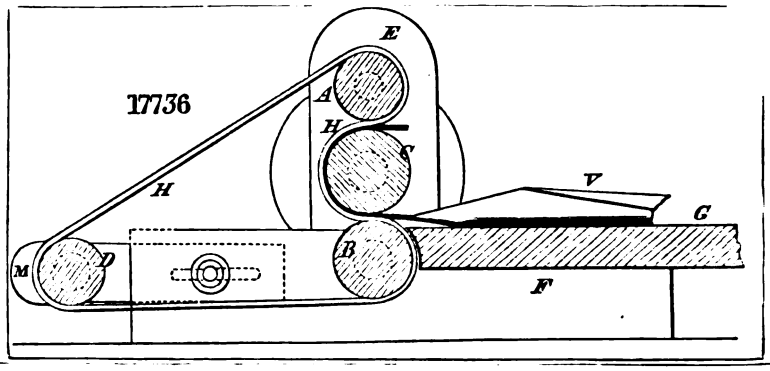

17190

fig. 1

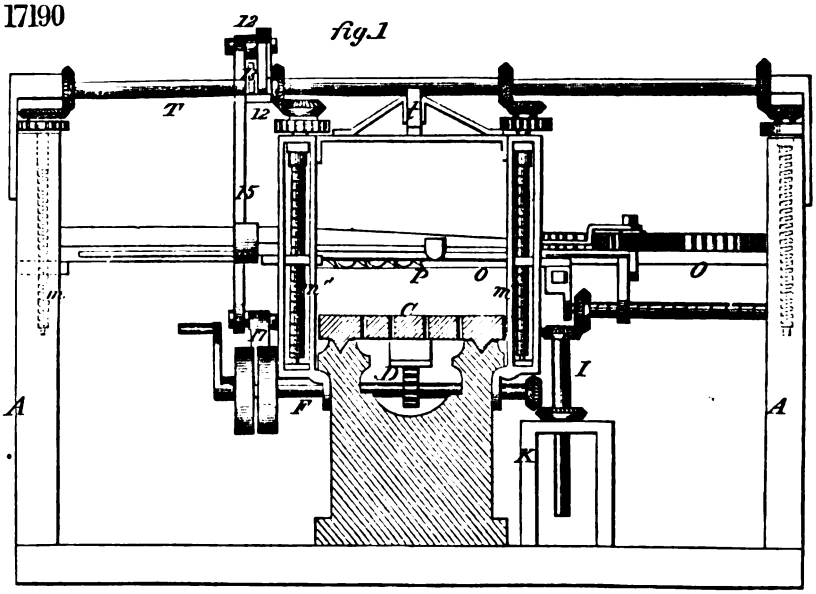

fig. 2

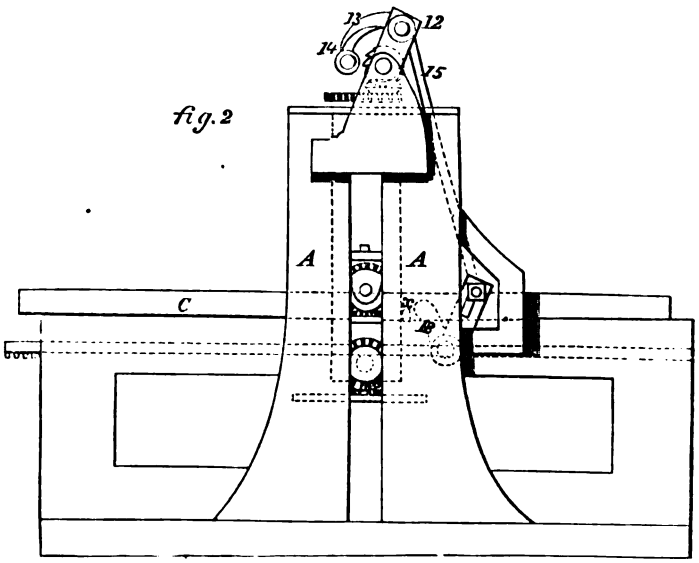

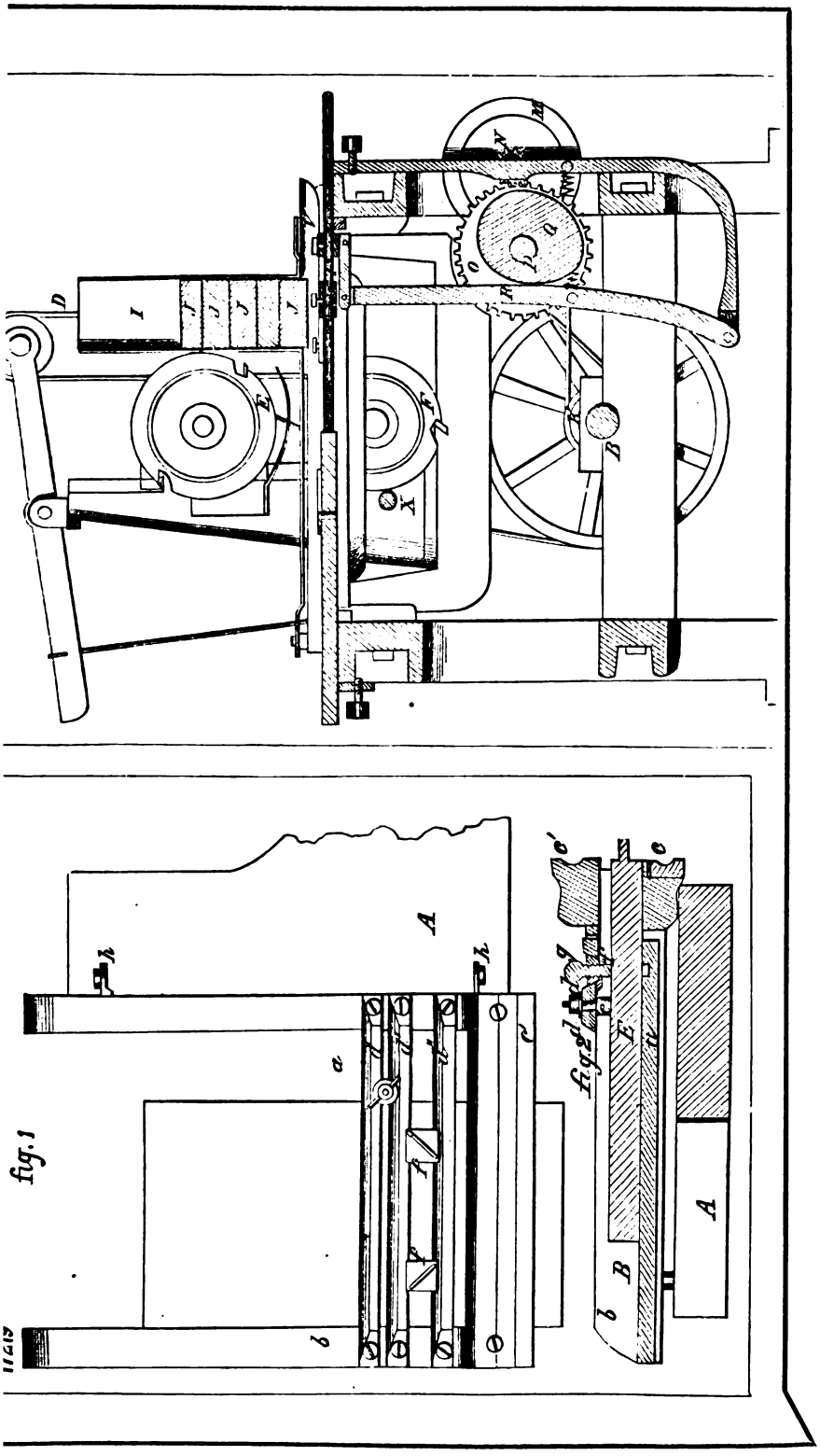
fig. 1
fig. 2

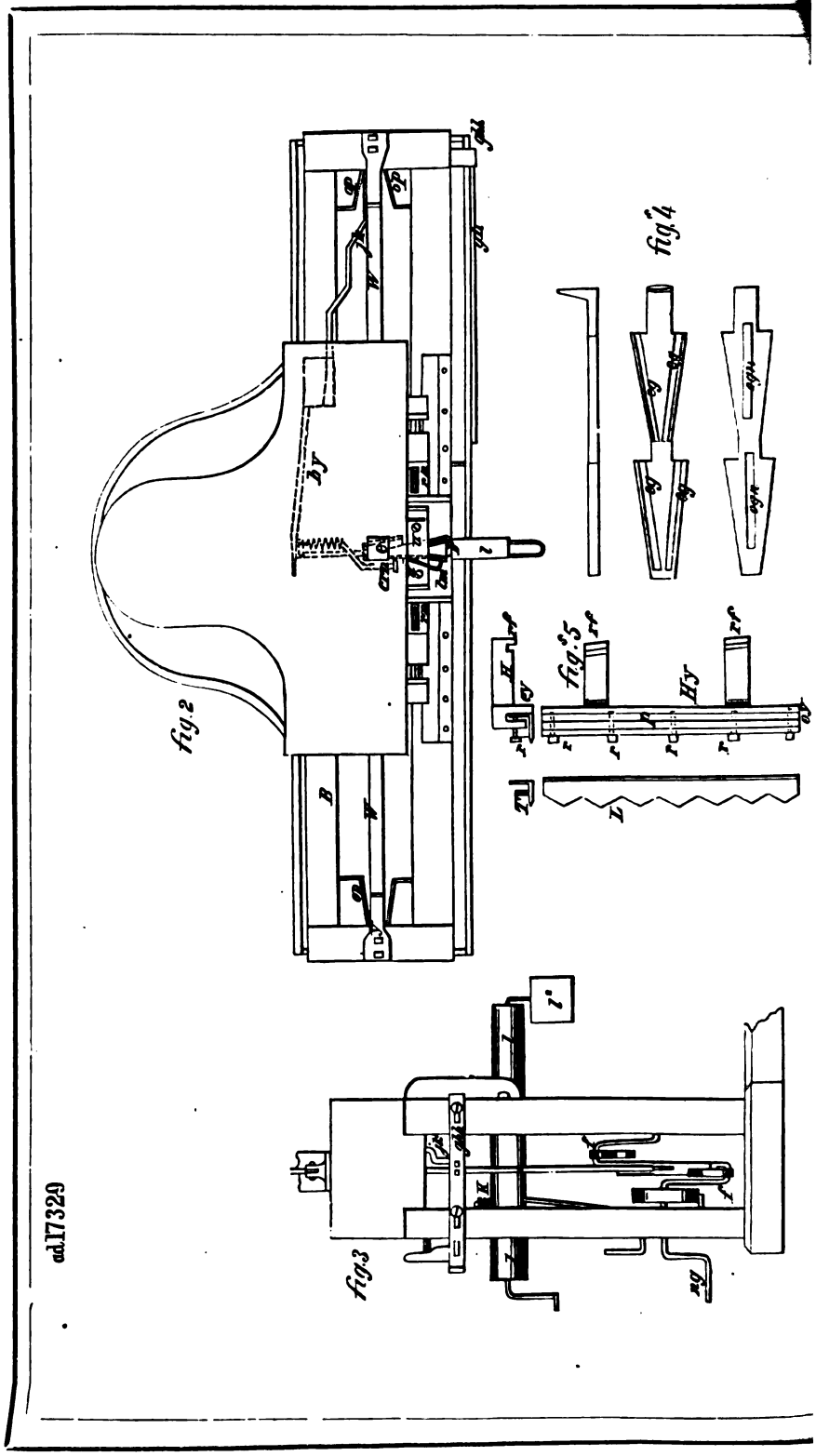
fig.2
fig.3
fig.4
fig.5
ad.17329

16453

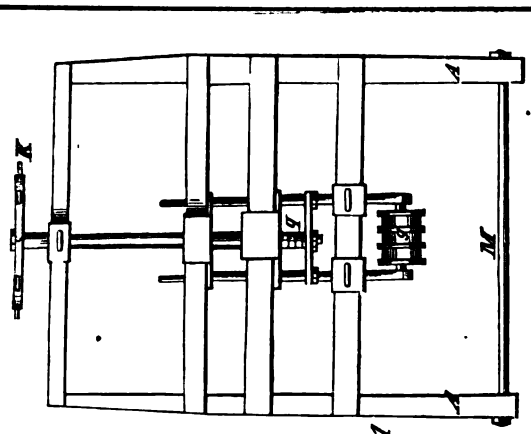

fig 1

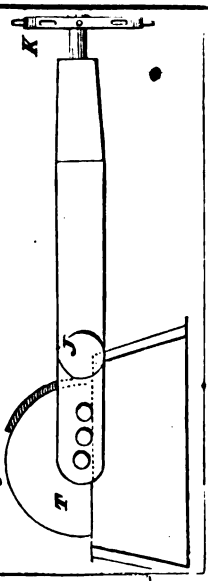

fig 2

17529

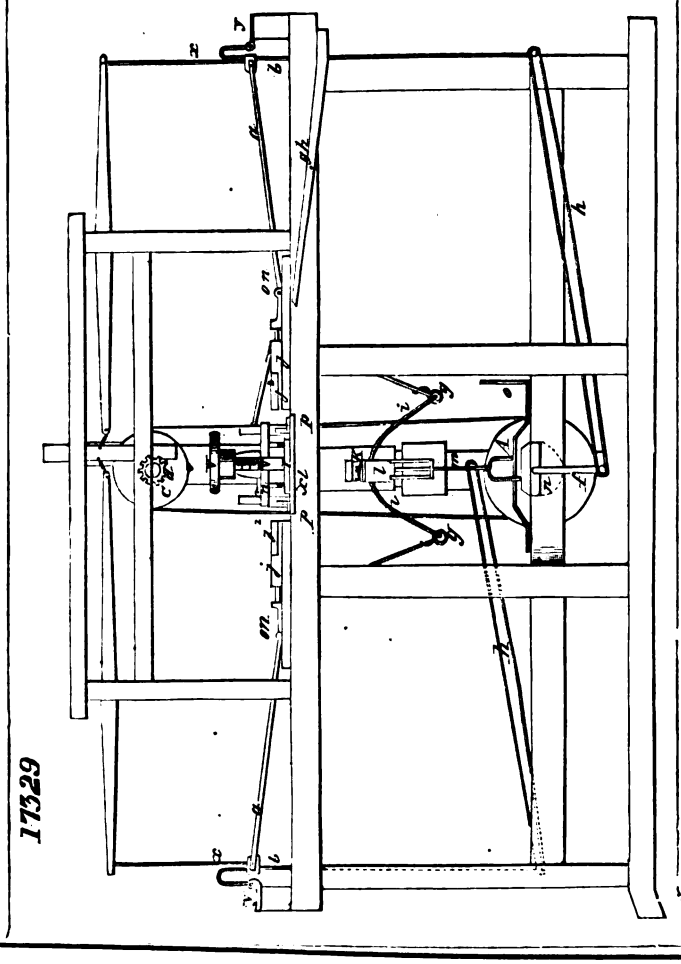

17072

fig. 1

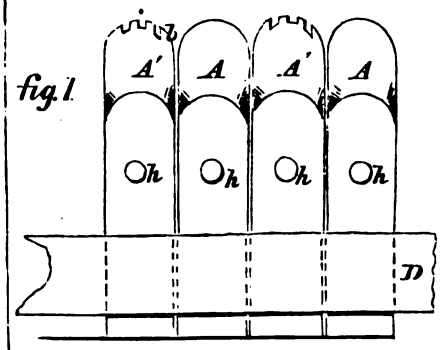

fig. 2

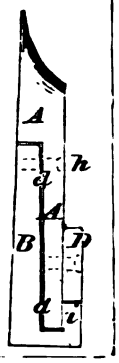

17130

fig. 1

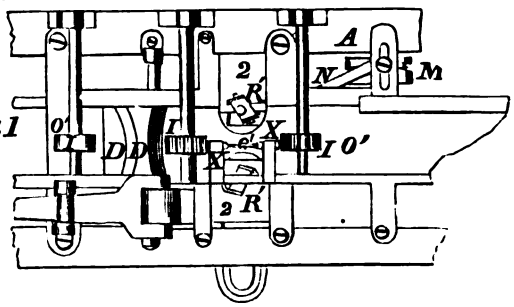

fig. 2

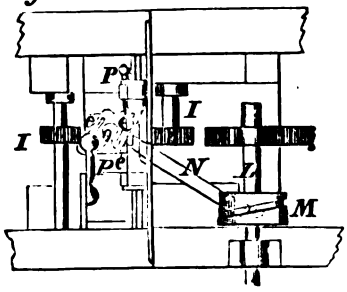

fig. 3

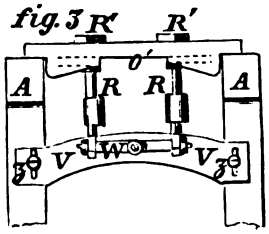

18378

fig 1

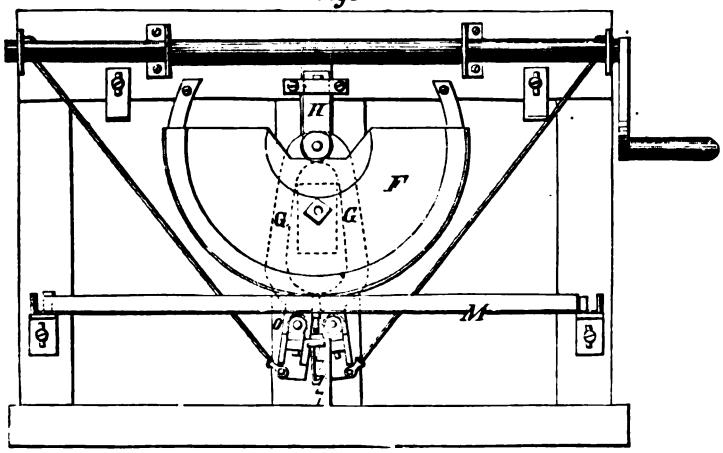

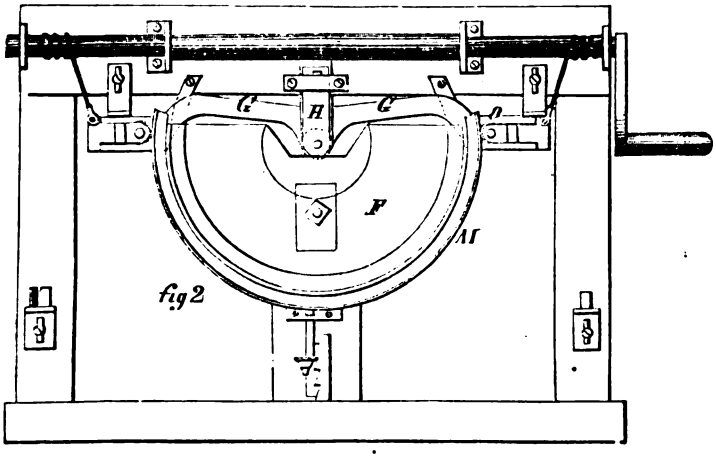

fig 2

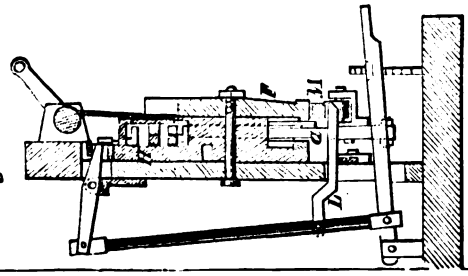

fig 3

17169

fig. 1

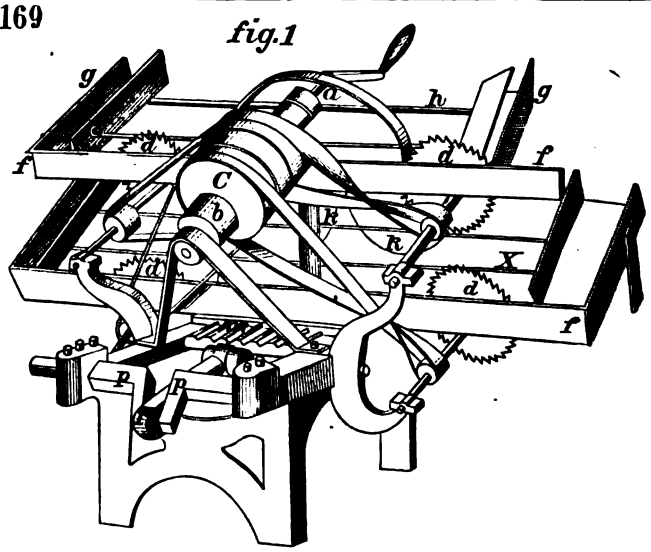

fig. 2

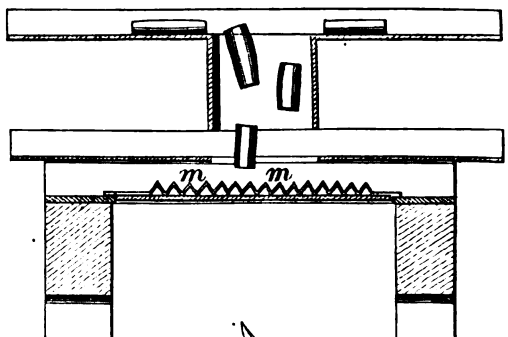

fig. 3

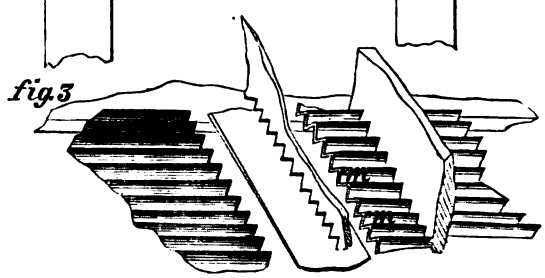

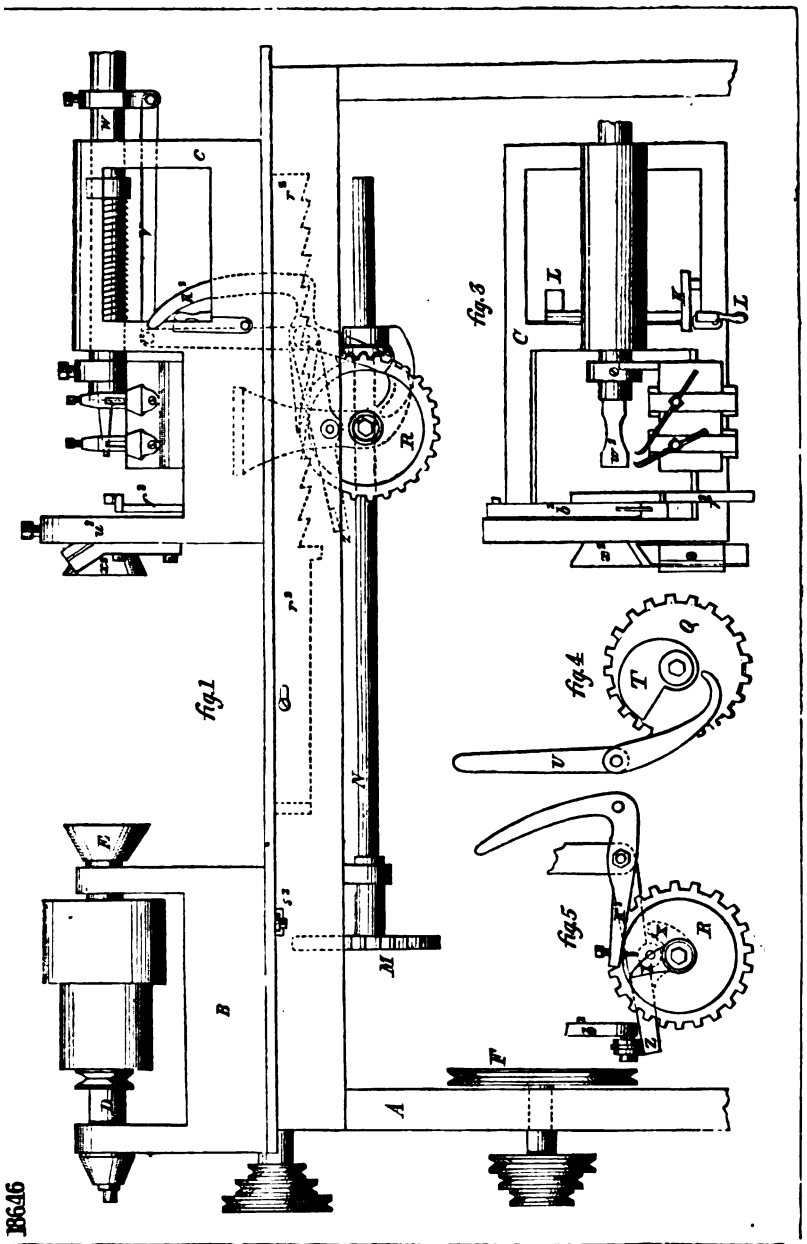
fig.1
fig.3
fig.4
fig.5
B646

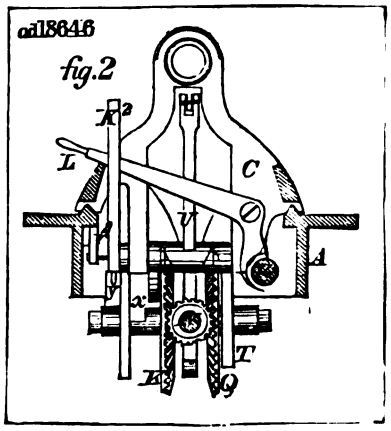
ad18646
fig.2
K²
L
C
V
A
x
T
K
Q

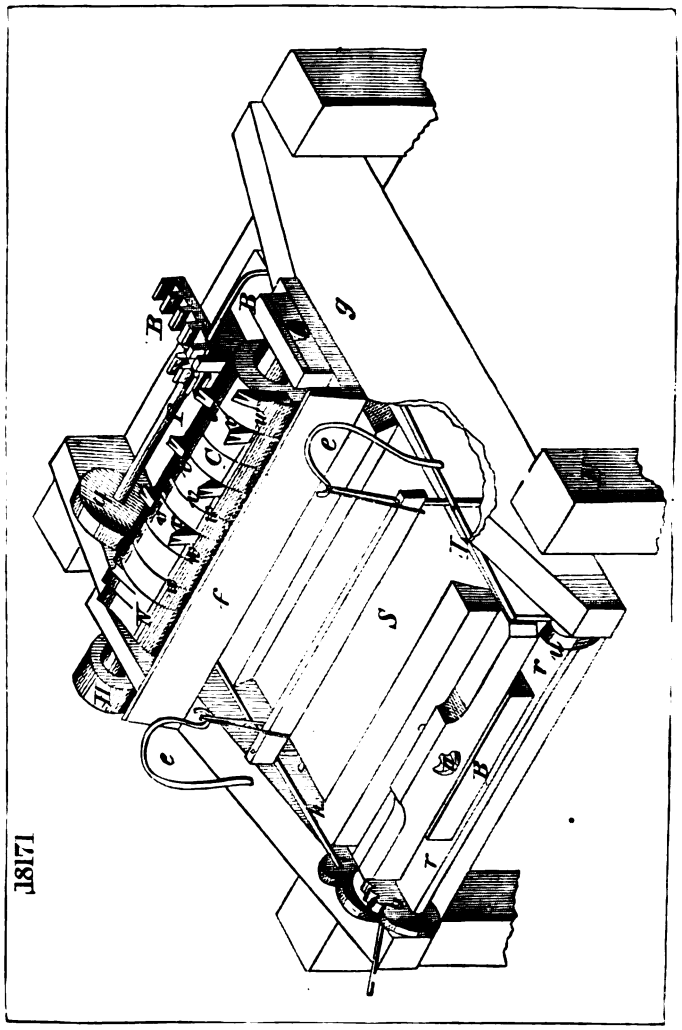
18171
B
B
g
e
f
S
e
B
r

17249

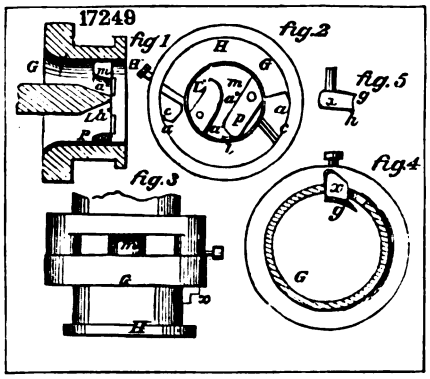

18917

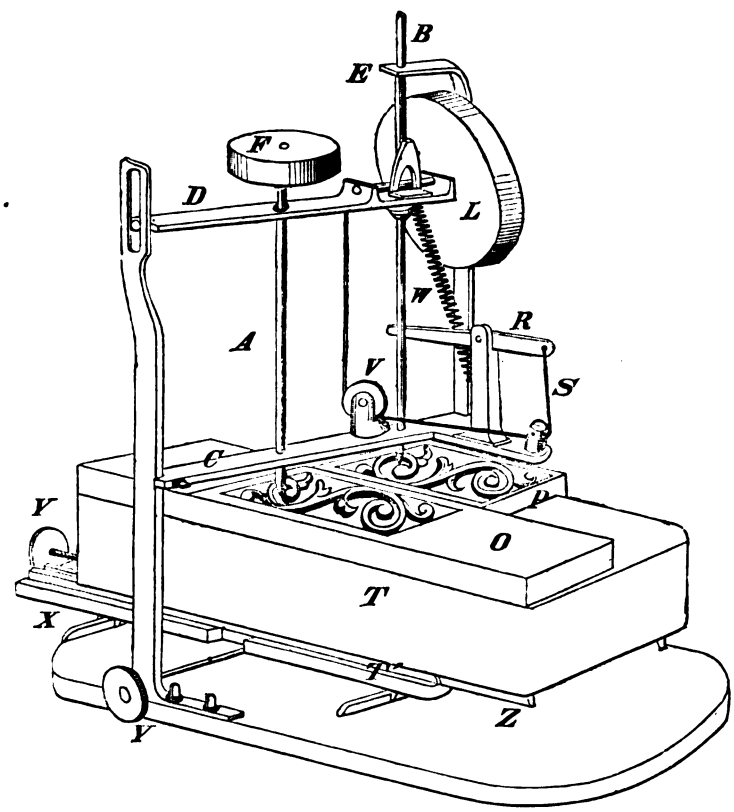

17061

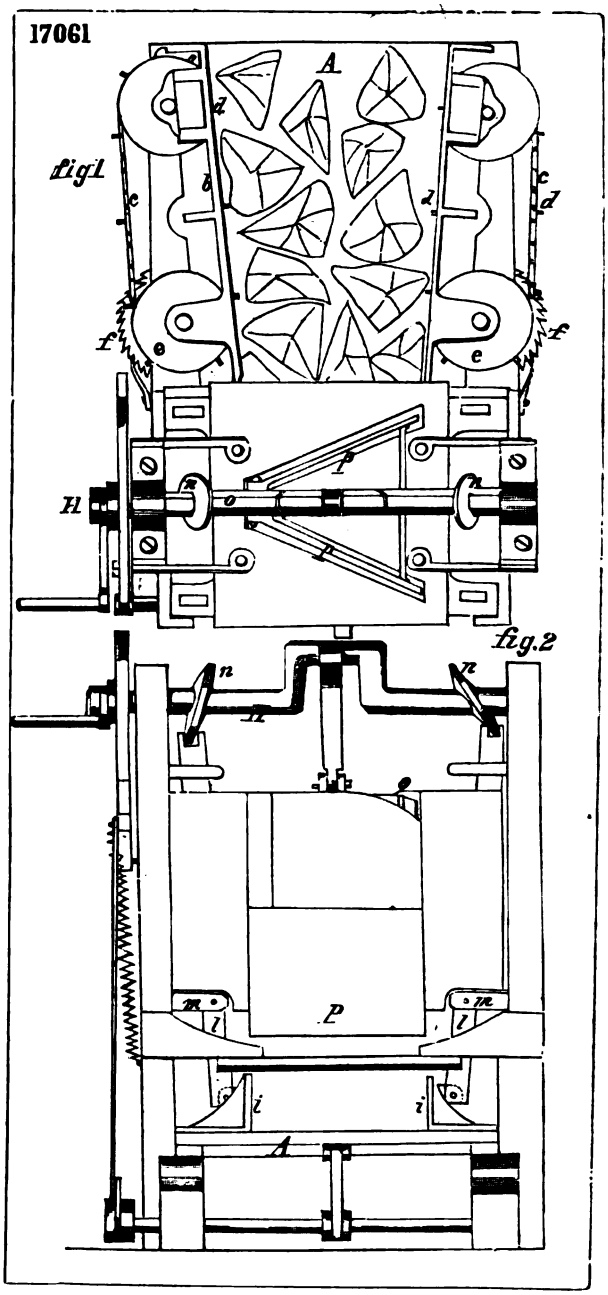

18298

Fig. 1

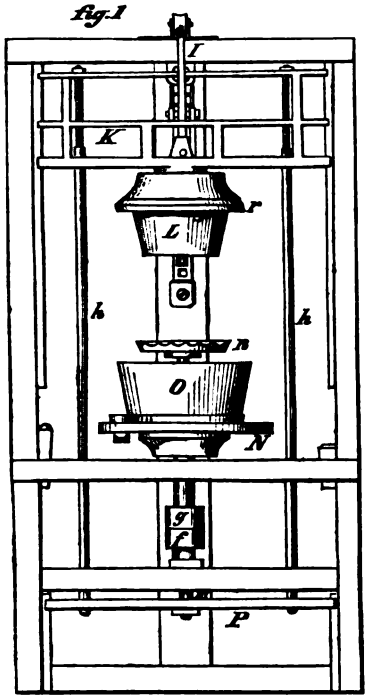

Fig. 2

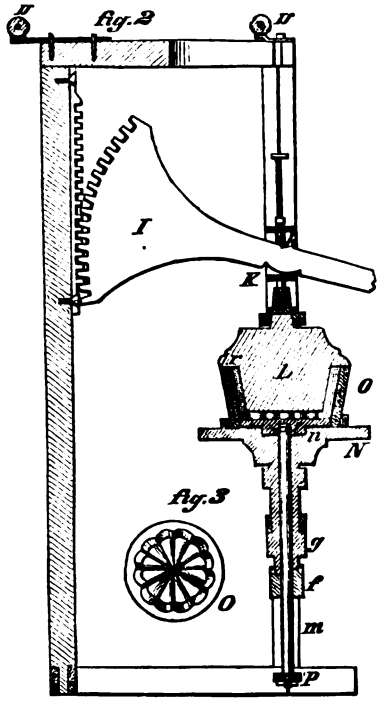

Fig. 3

16672

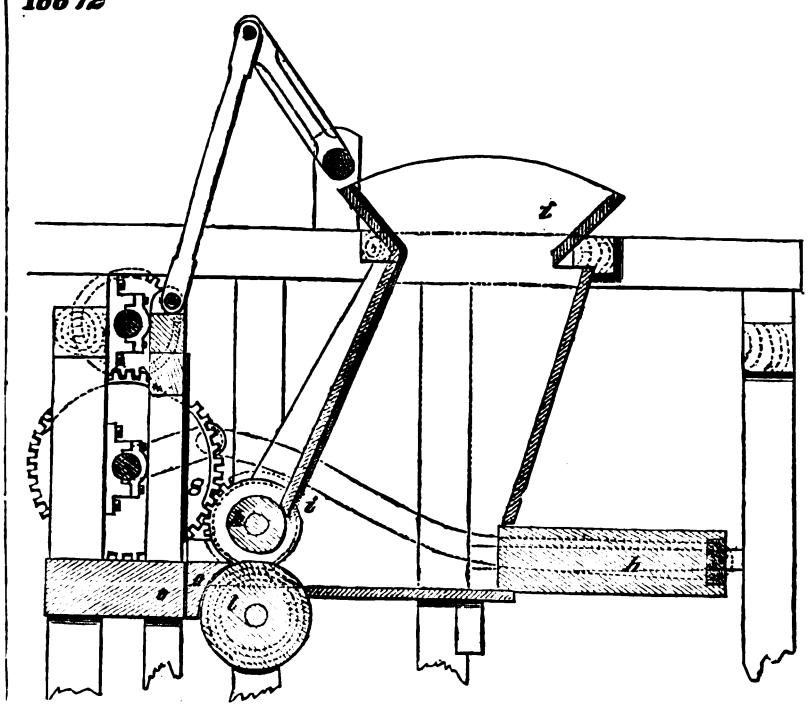

16878

Fig. 1

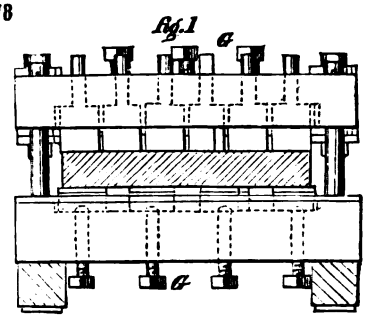

Fig. 2

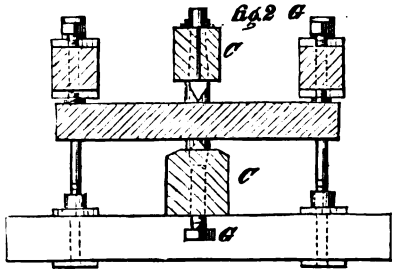

Fig. 3

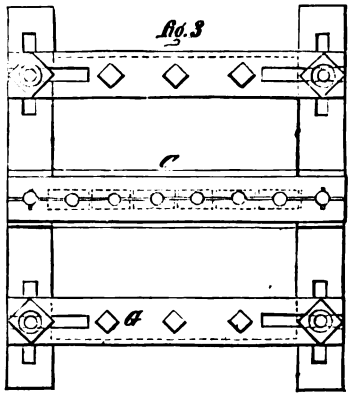

17960

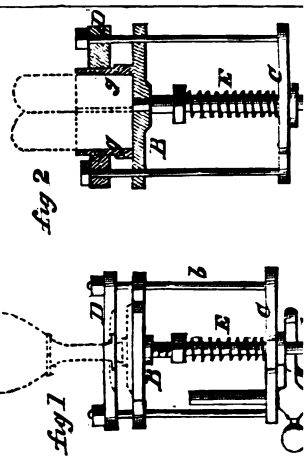

17056

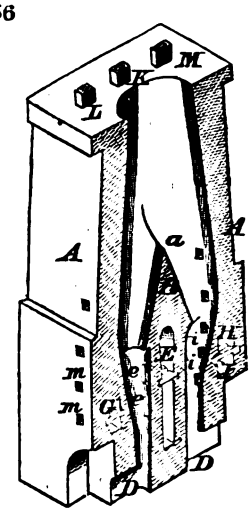

16460

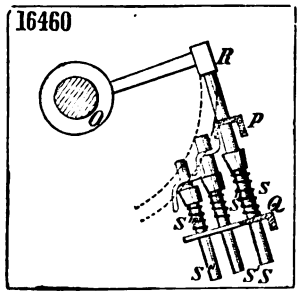

16468

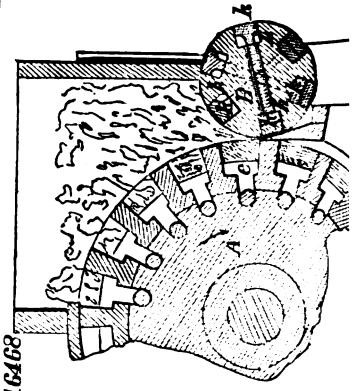

16545

fig.1

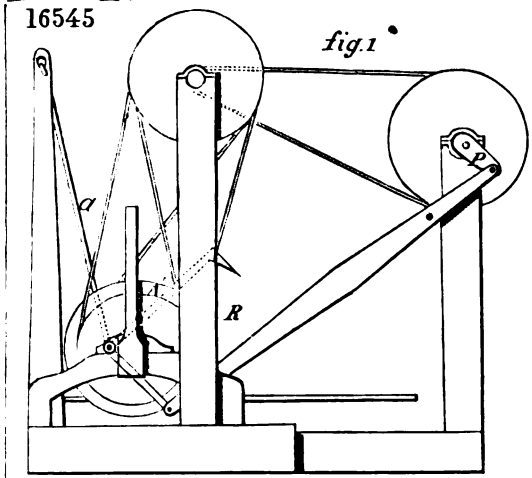

fig.2

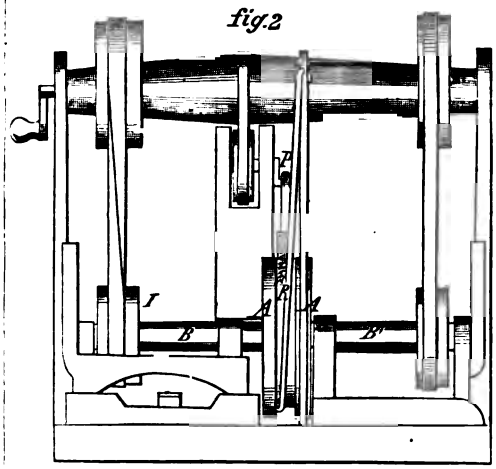

fig.3

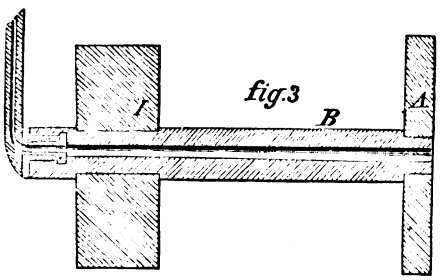

fig.2

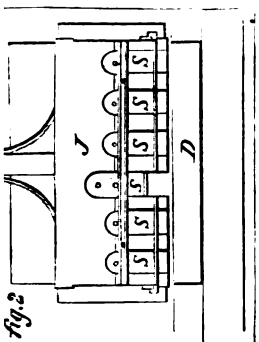

fig.1

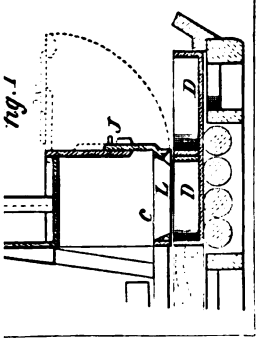

17993

fig. 1

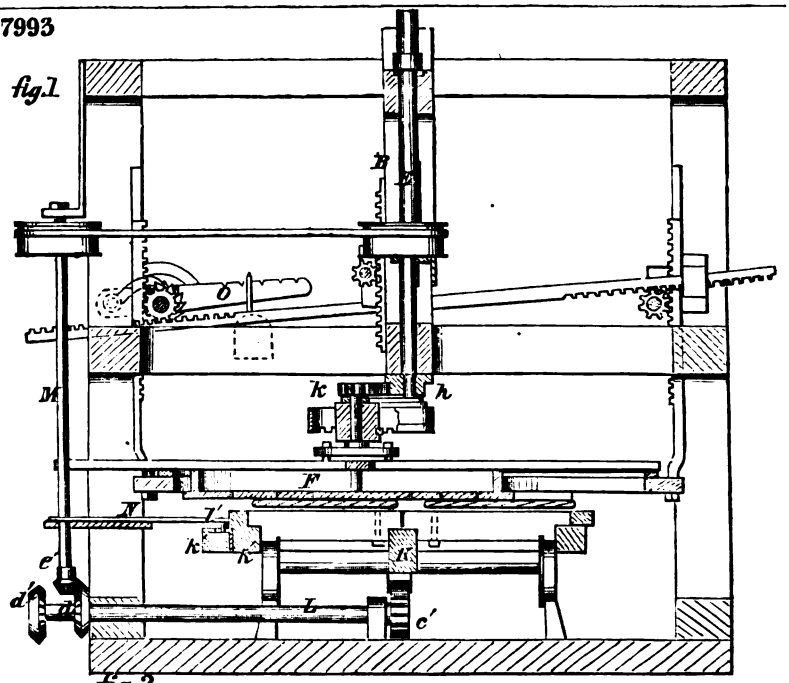

fig. 2

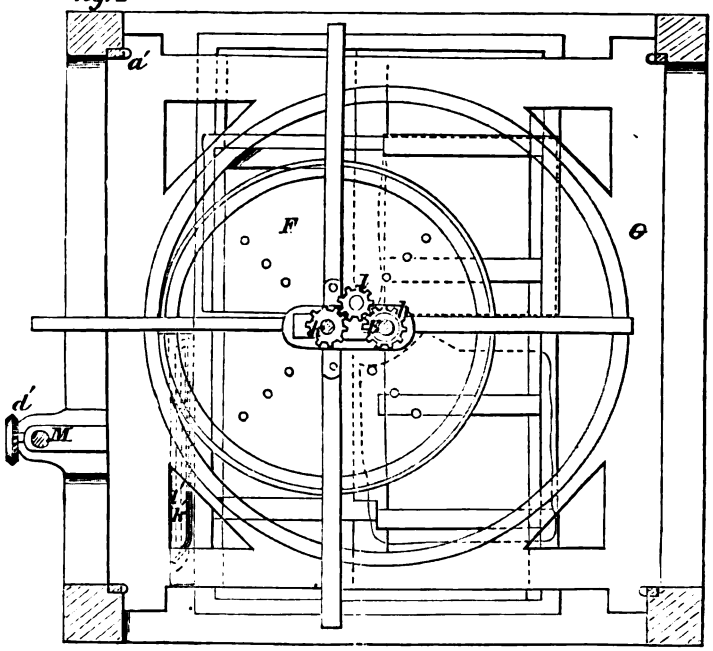

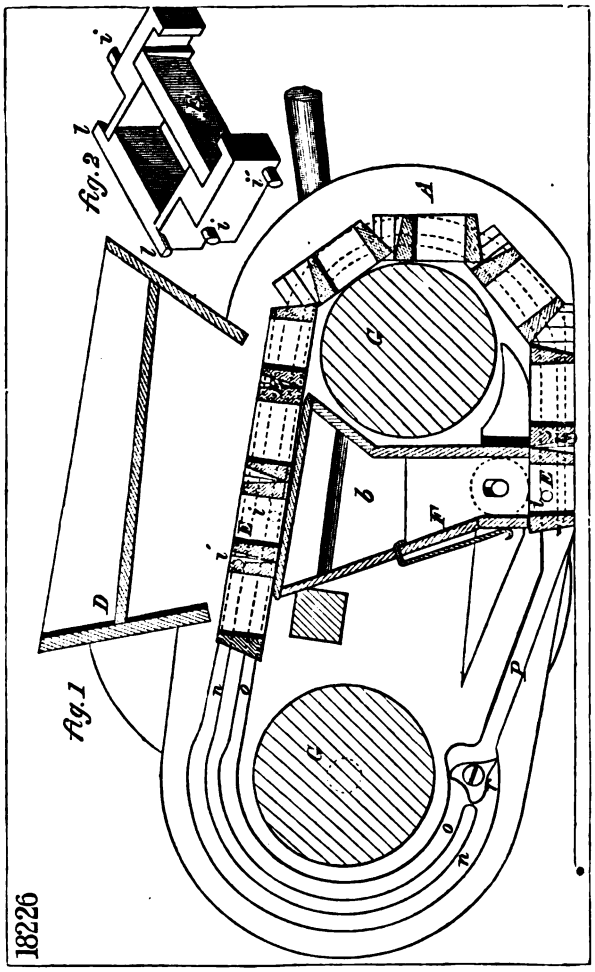
Fig. 2
Fig. 1
18226

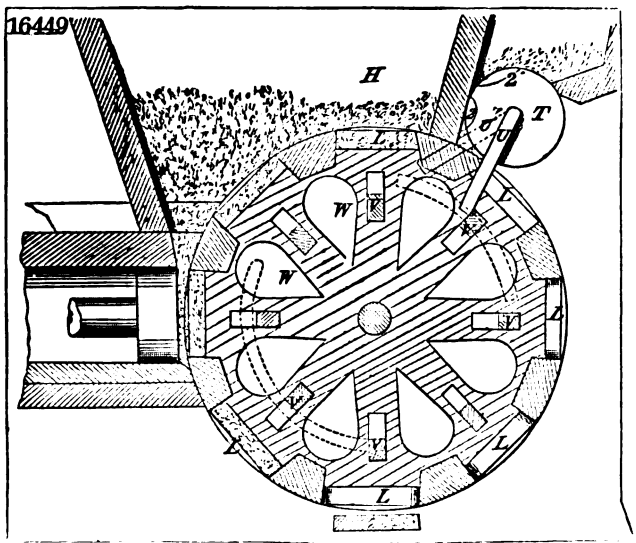
16449
H
T
W
L

17125

fig. 1

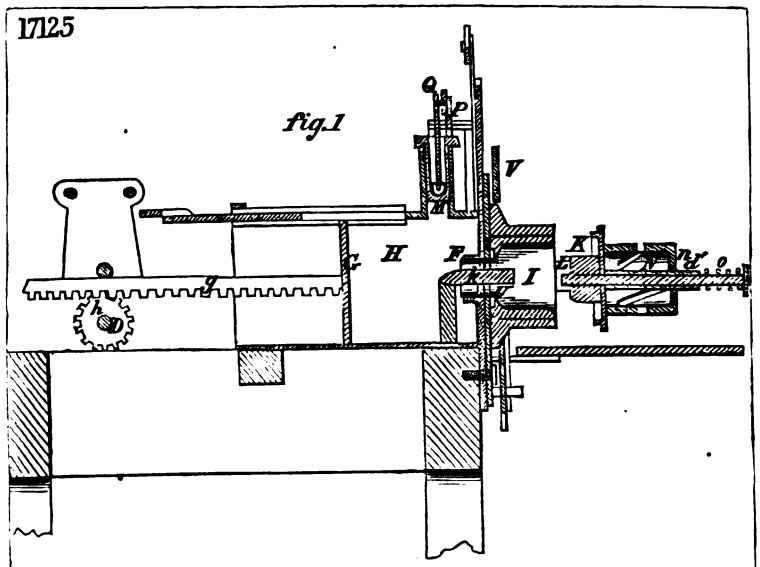

fig. 2

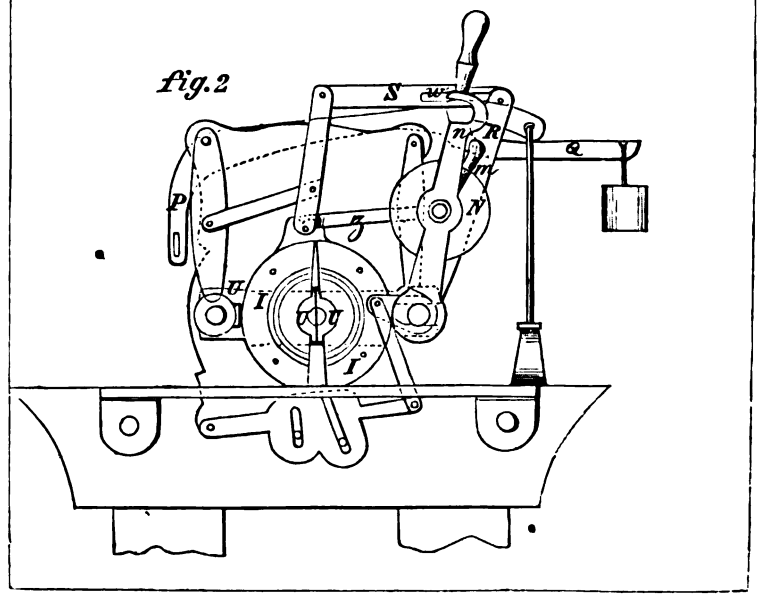

18392 *fig 1*

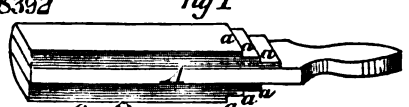

fig 2

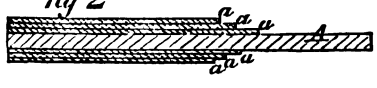

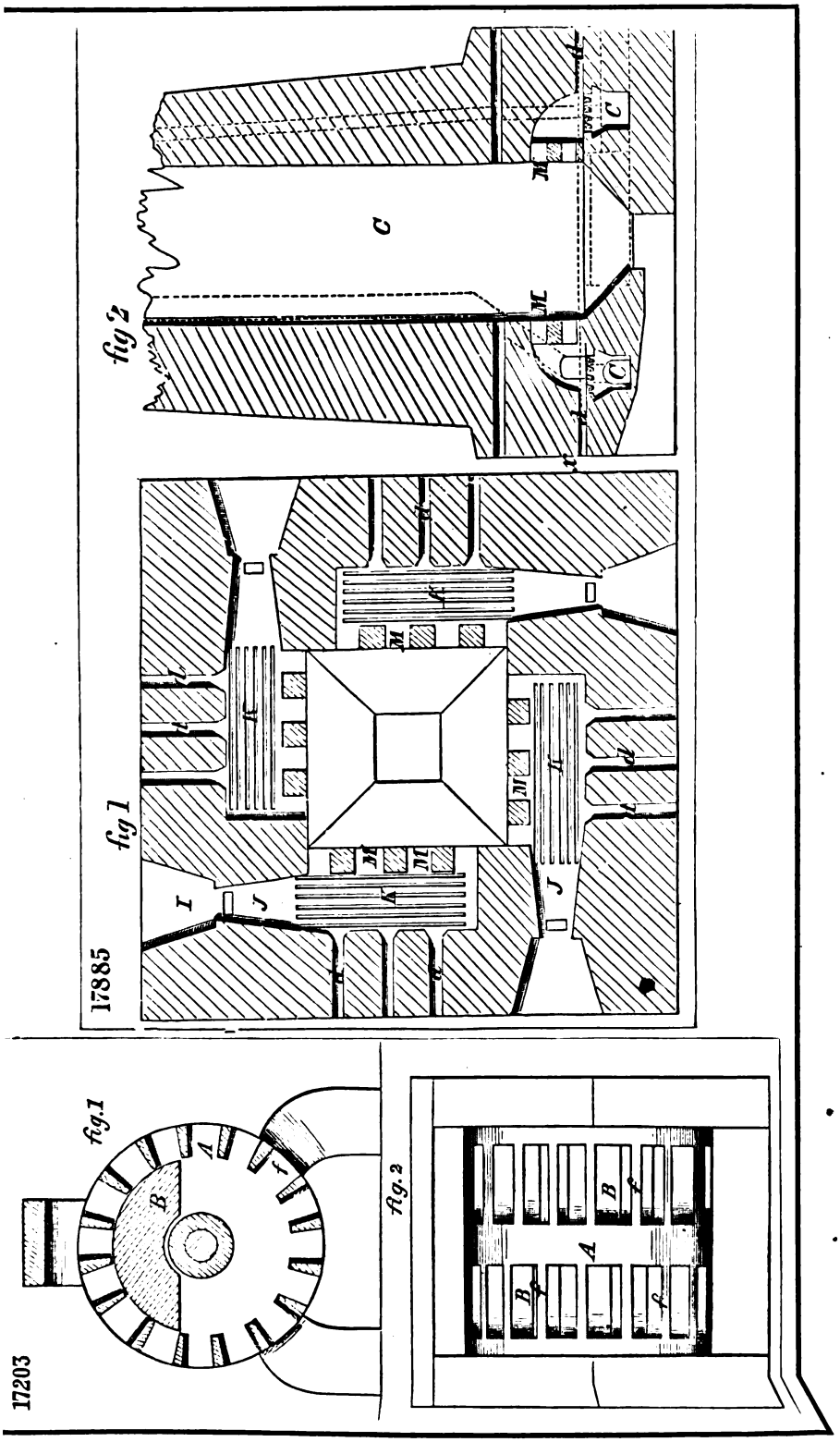
17885
fig 1
fig 2
17203
fig.1
fig.2

17807

fig. 1

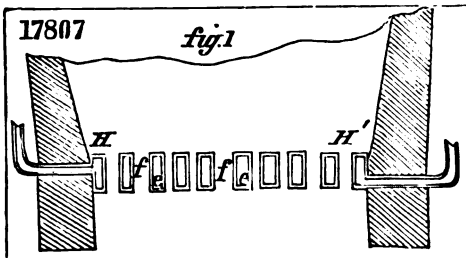

fig. 2

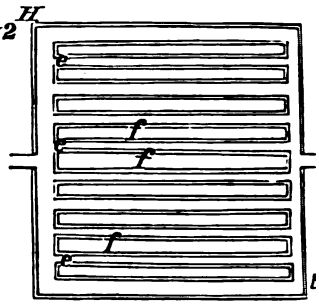

18764

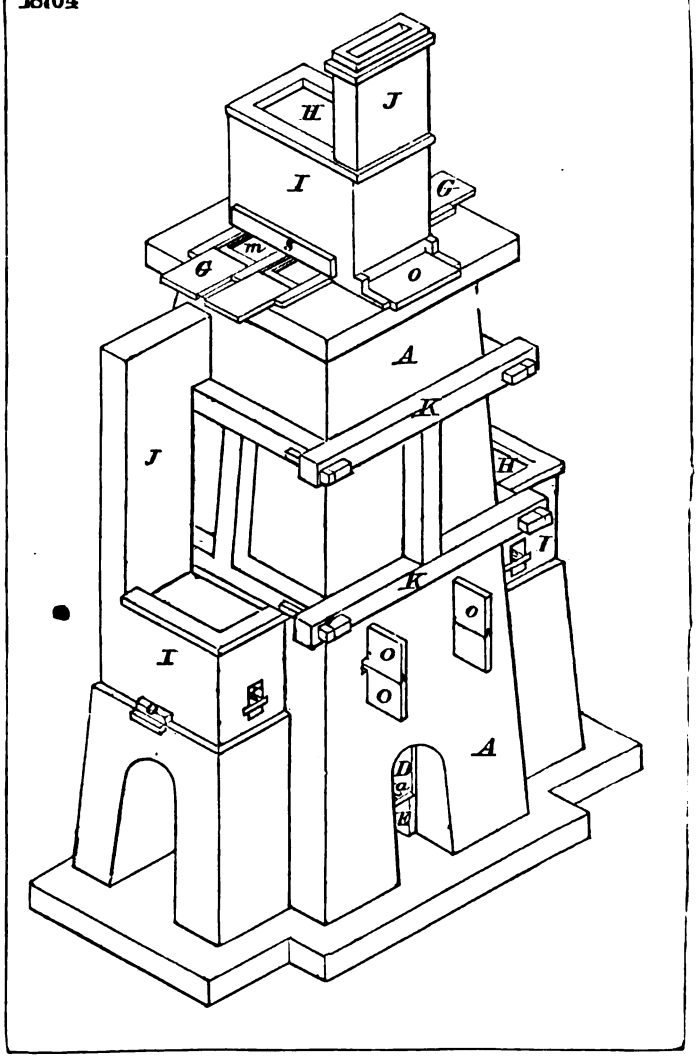

ad13764

fig. 2

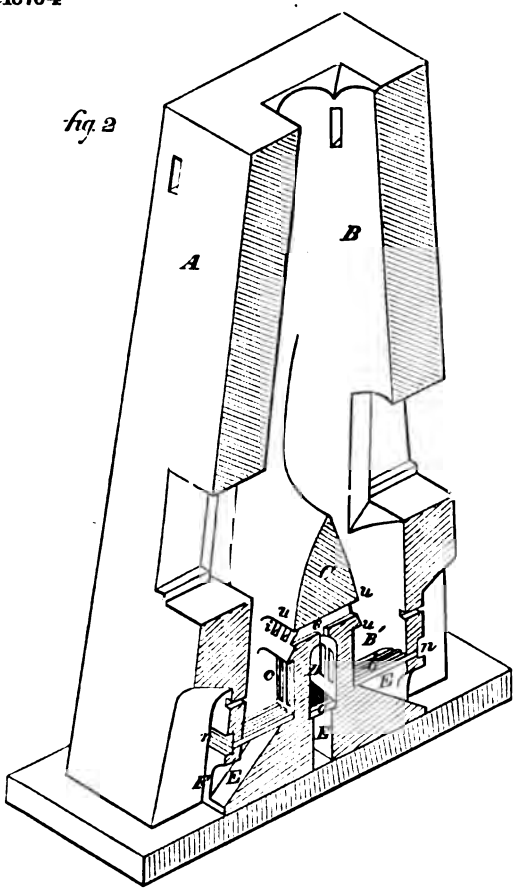

18531

fig. 1

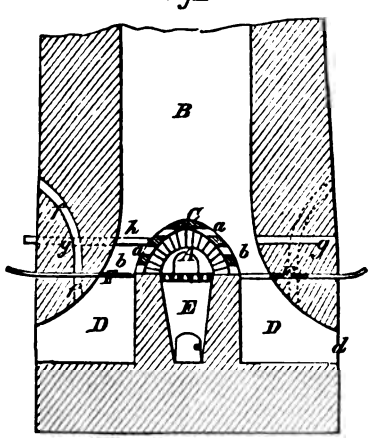

fig. 2

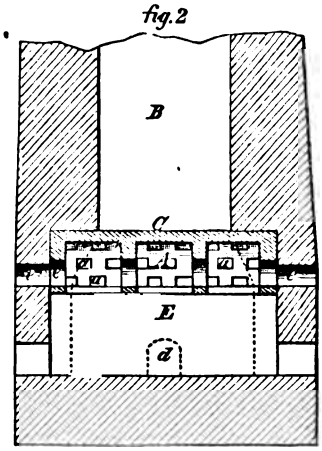

17220

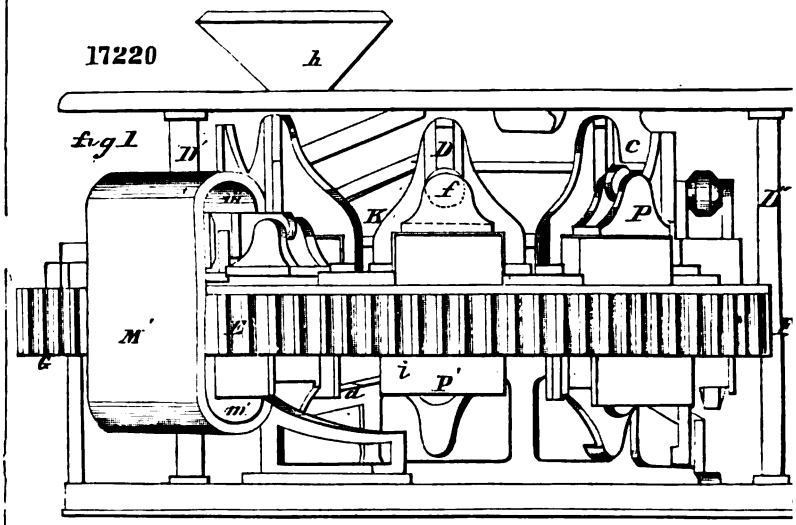

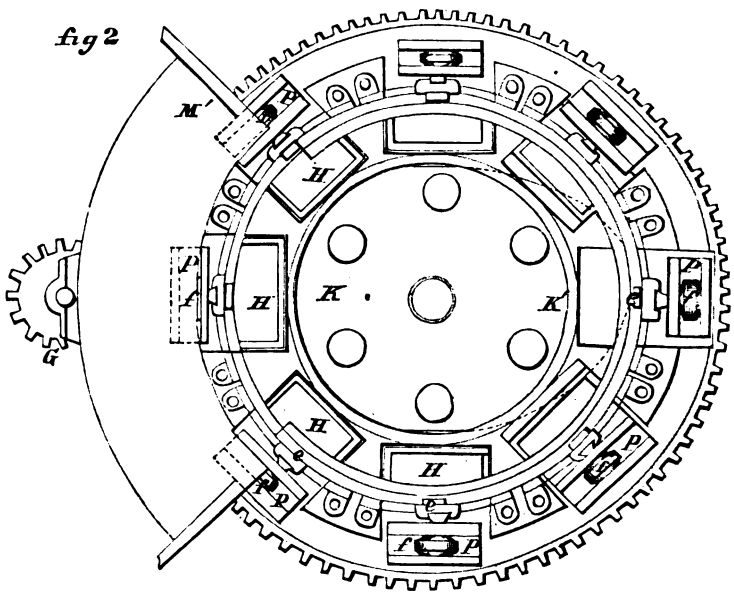

ad. 17220

fig. 3

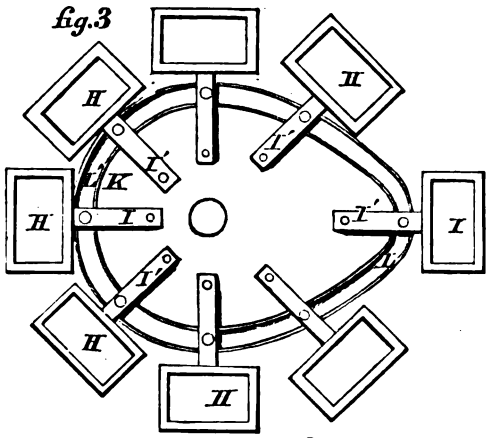

fig. 4

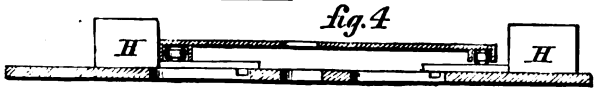

fig. 5

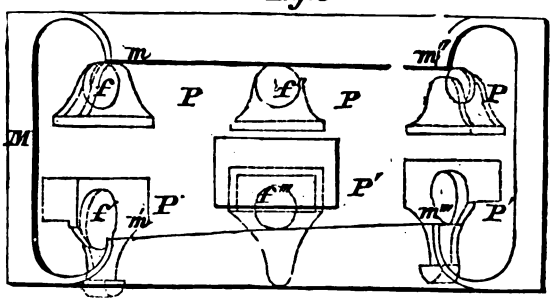

17739

fig 1

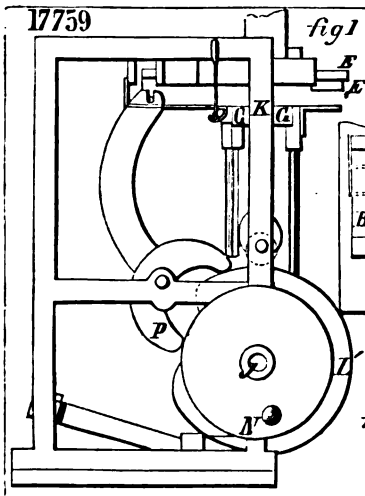

fig. 2

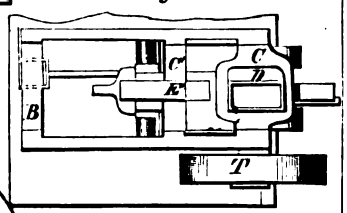

fig. 3.

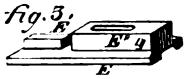

fig. 4

17546

fig. 1

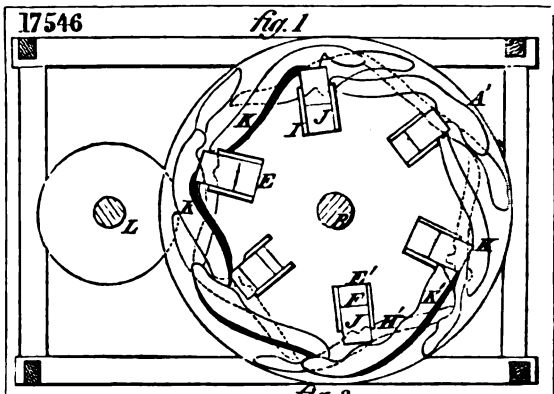

Fig. 2

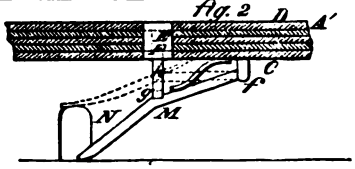

fig. 3

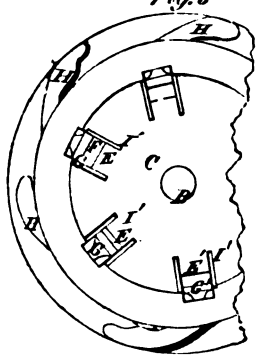

18166

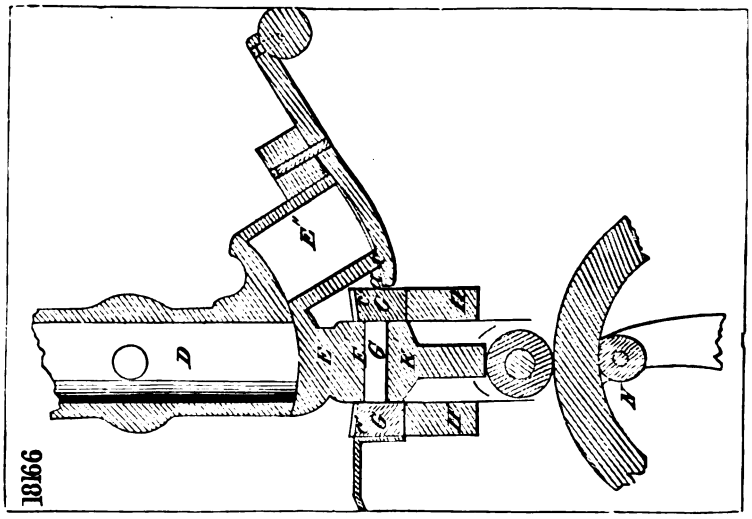

17999

fig 1

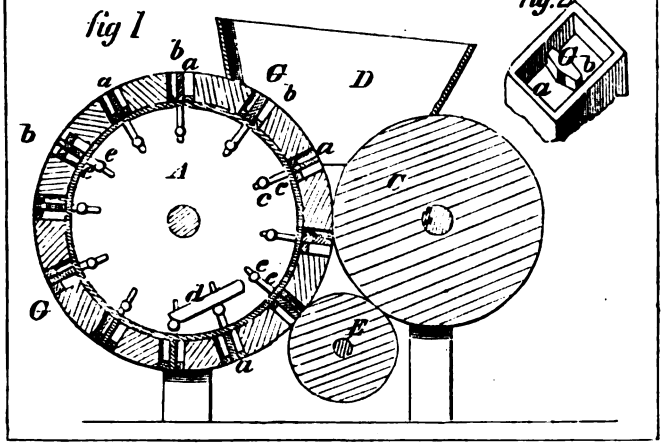

fig. 2

8059

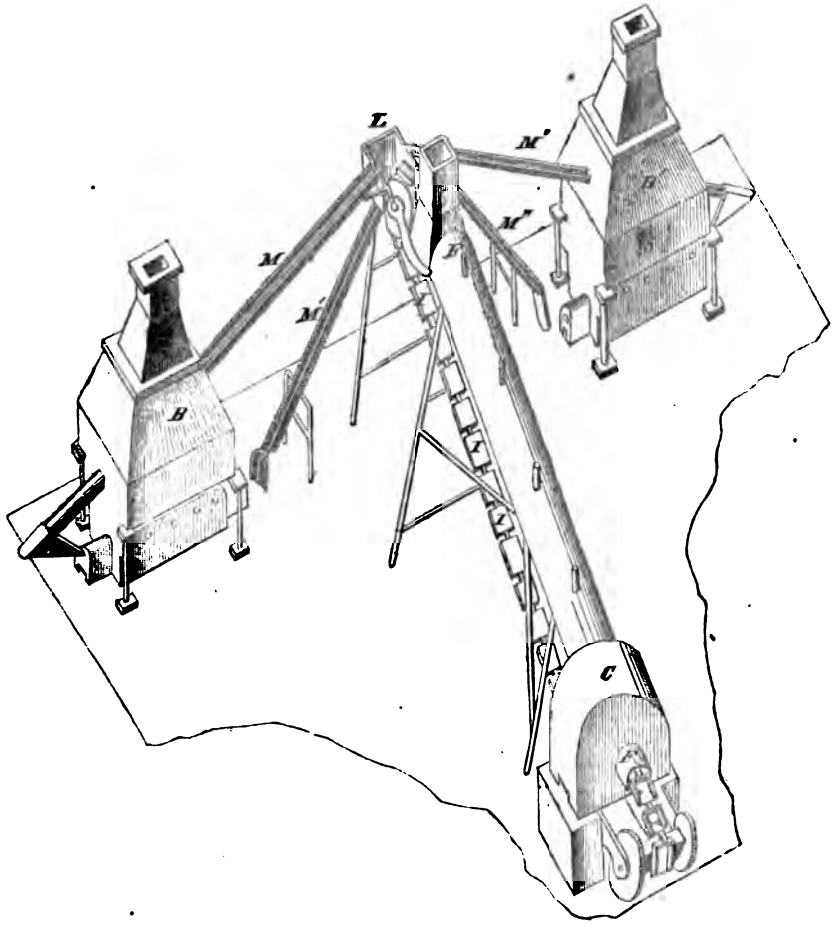

17505

fig 1

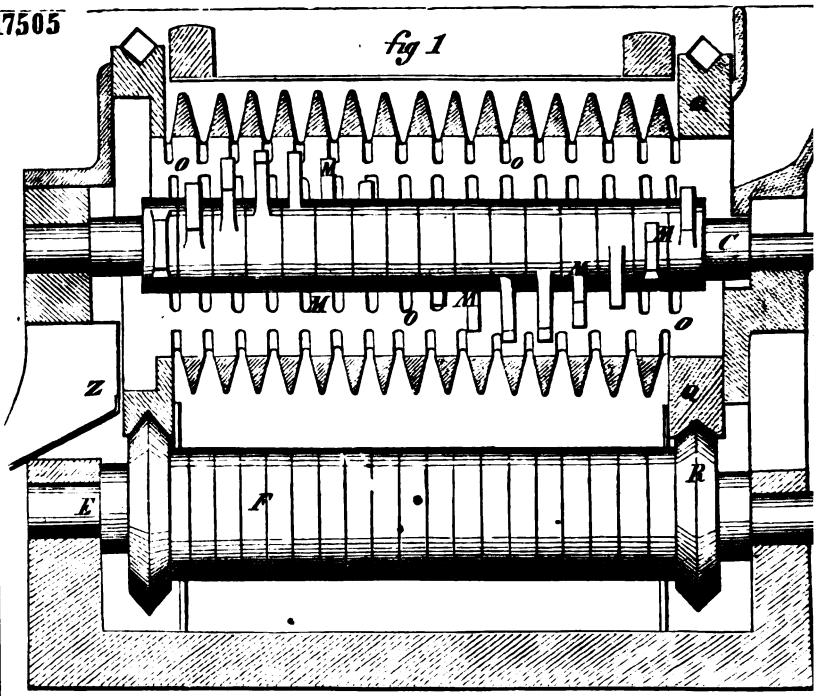

fig 2

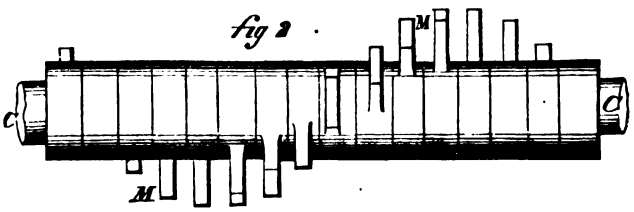

17889

fig. 1

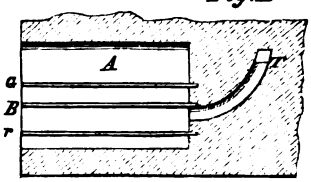

fig. 2

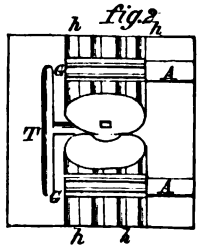

fig 3

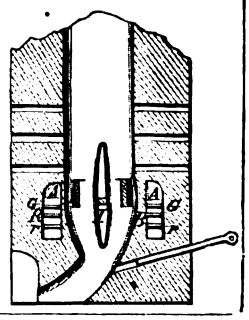

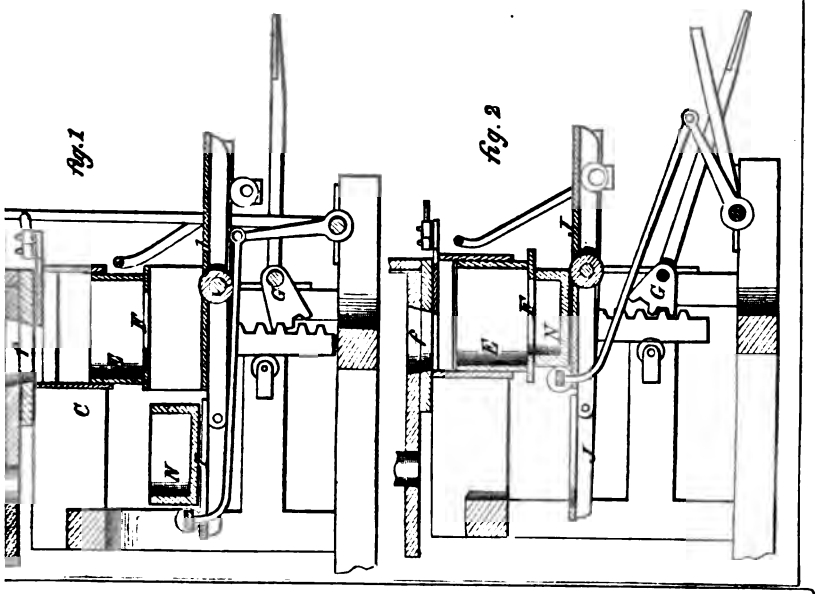

18318

fig. 1

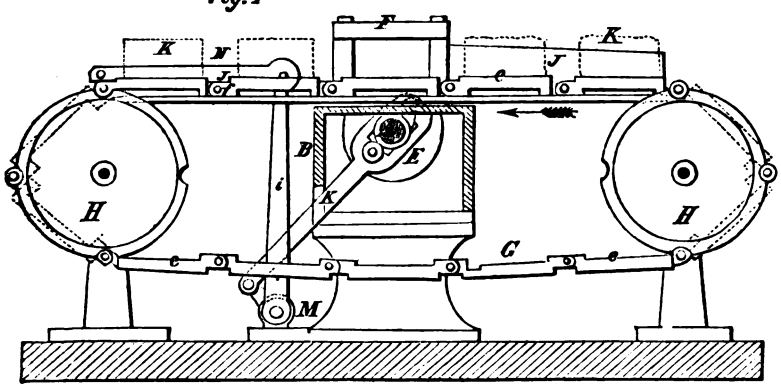

fig. 2

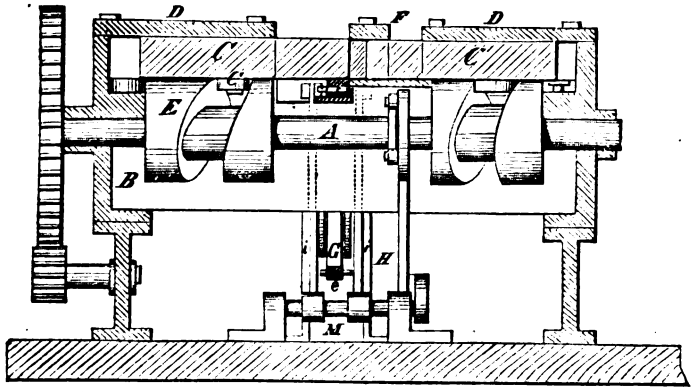

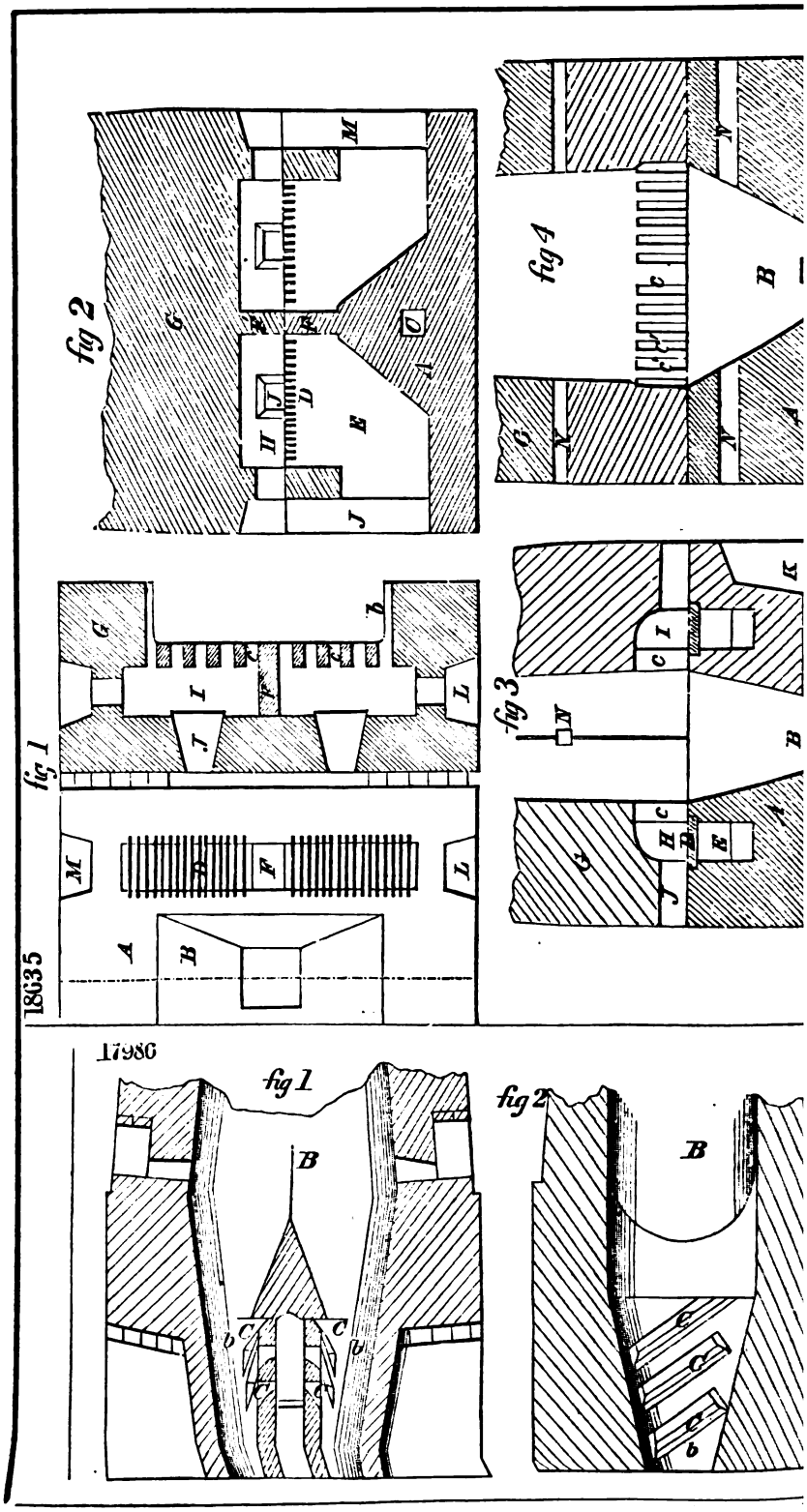
fig 2
fig 4
fig 3
fig 1
18635
17986
fig 1
fig 2

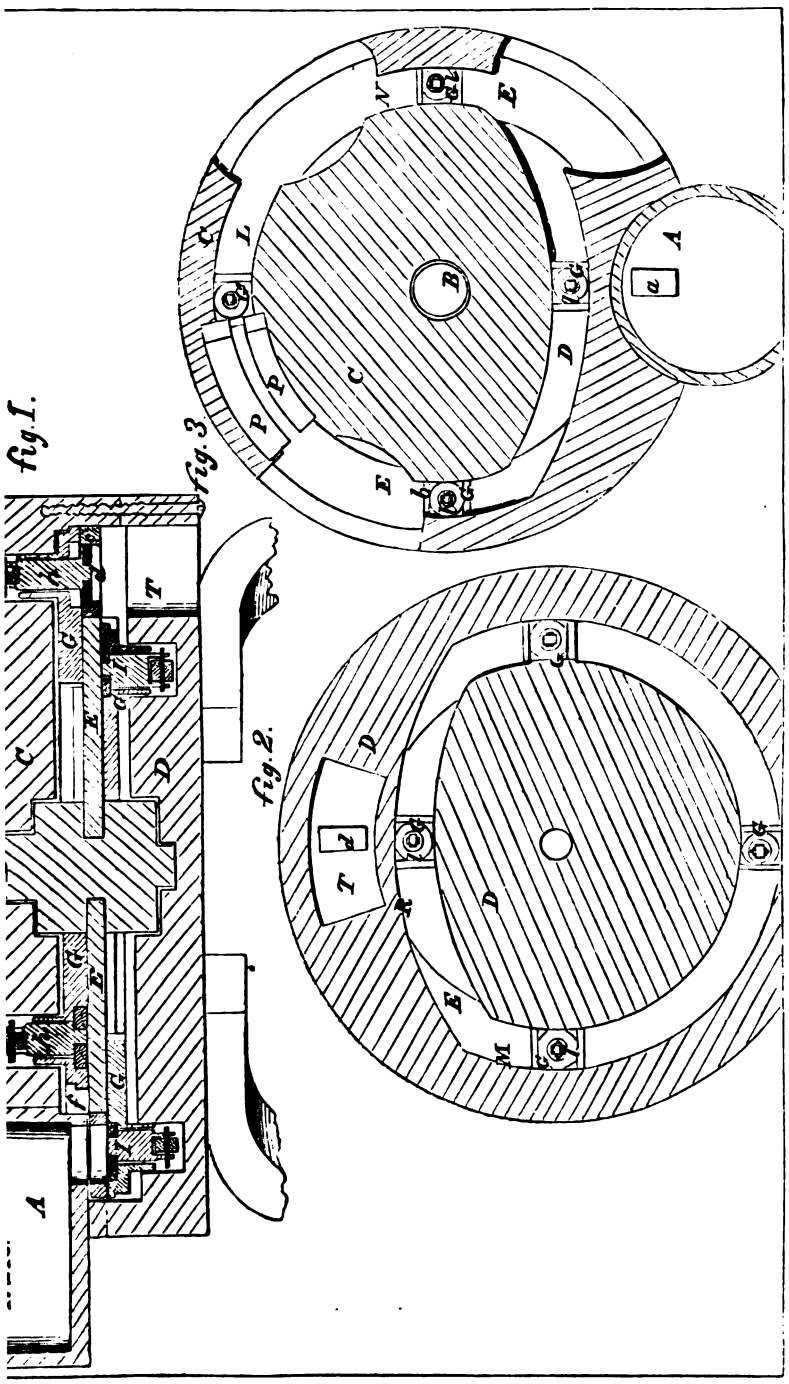
fig. 1.
fig. 2.
fig. 3

17131

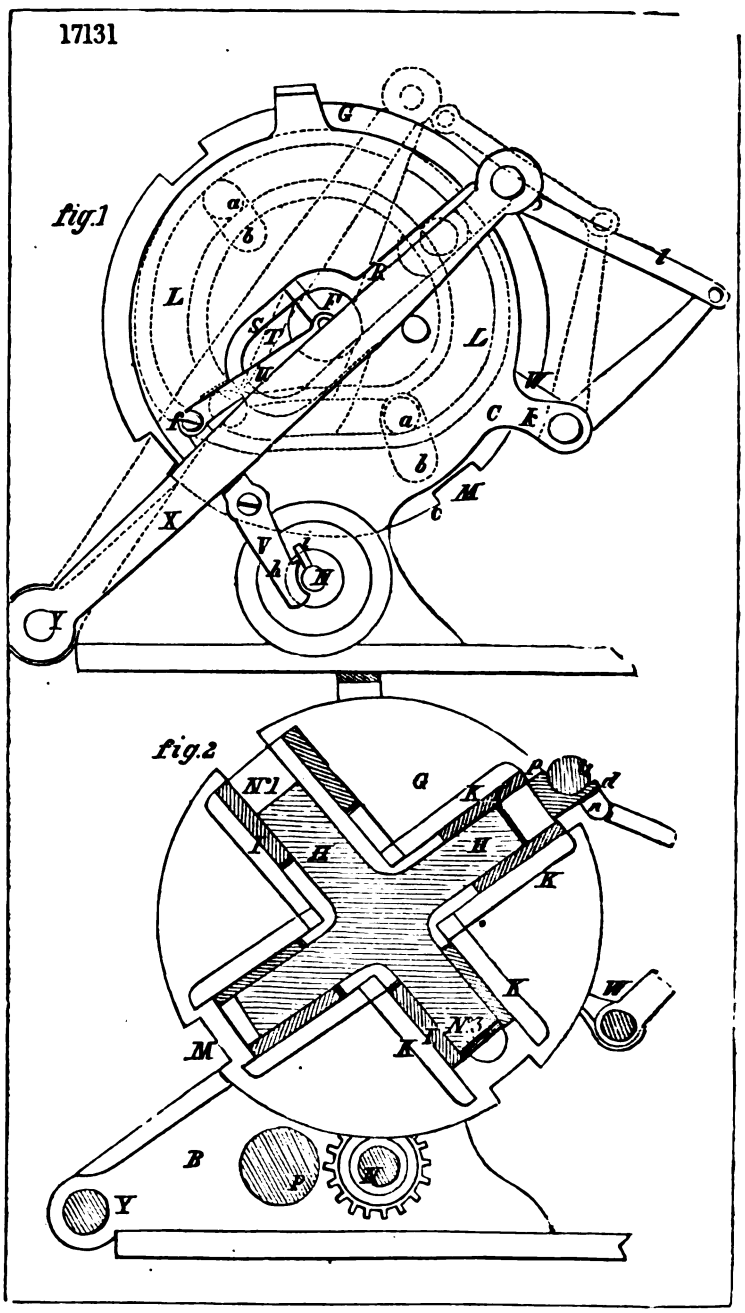

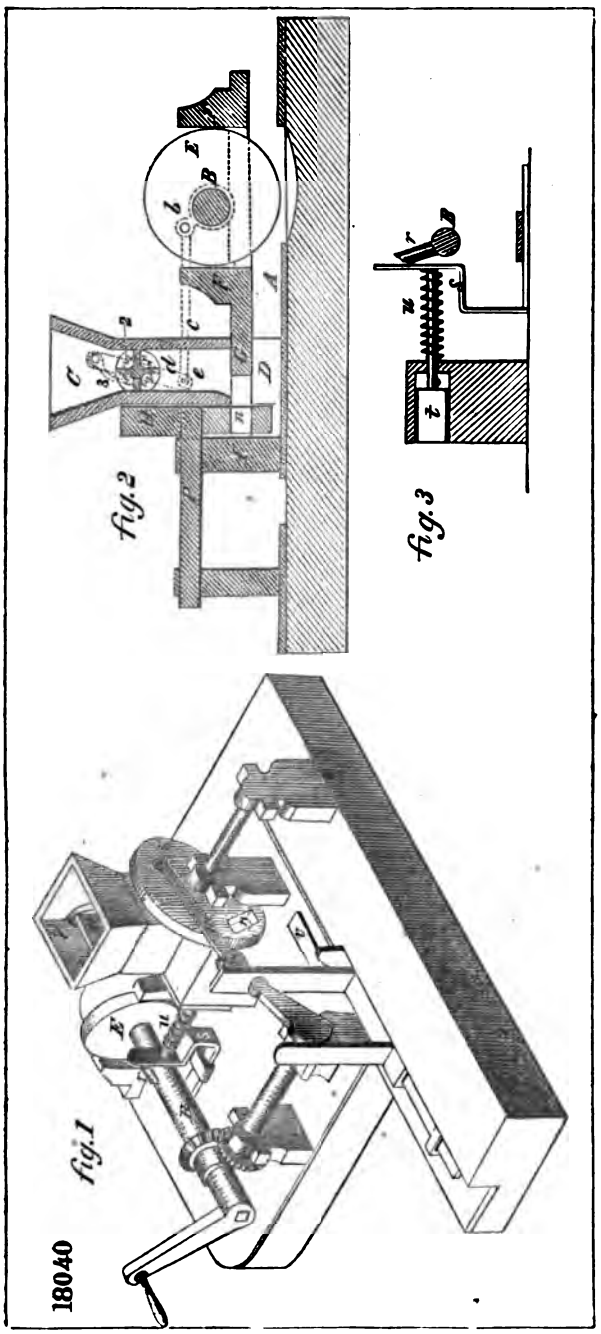
18040
fig.1
Fig.2
Fig.3

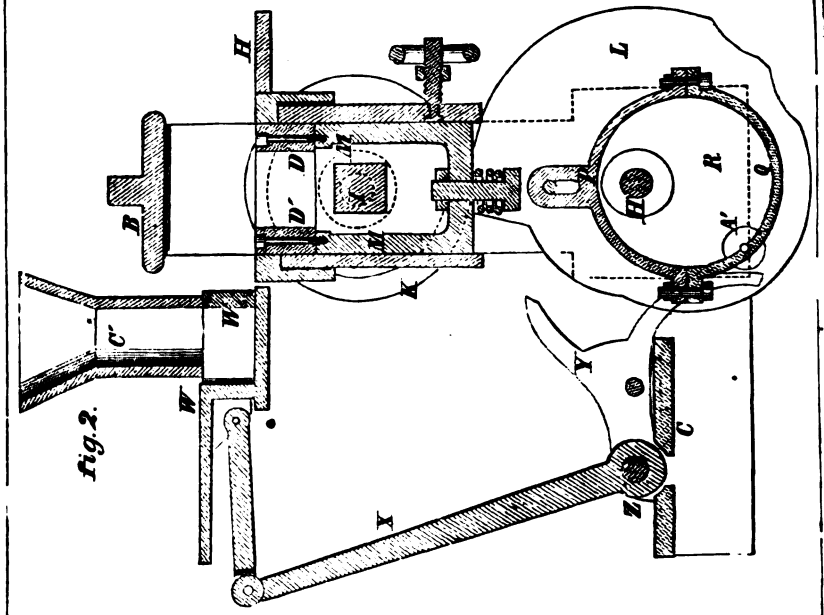

fig. 2.

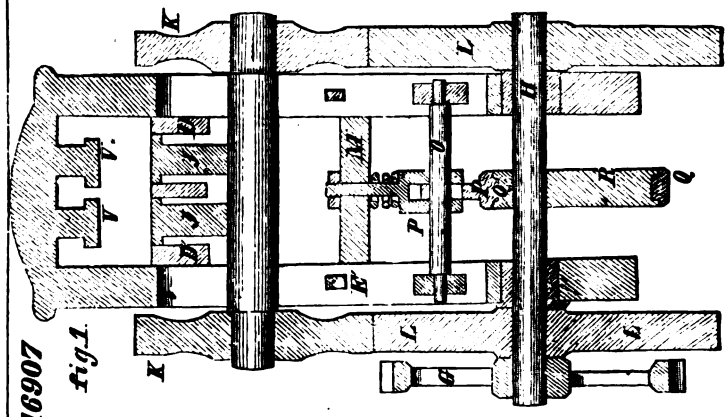

16907 fig. 1.

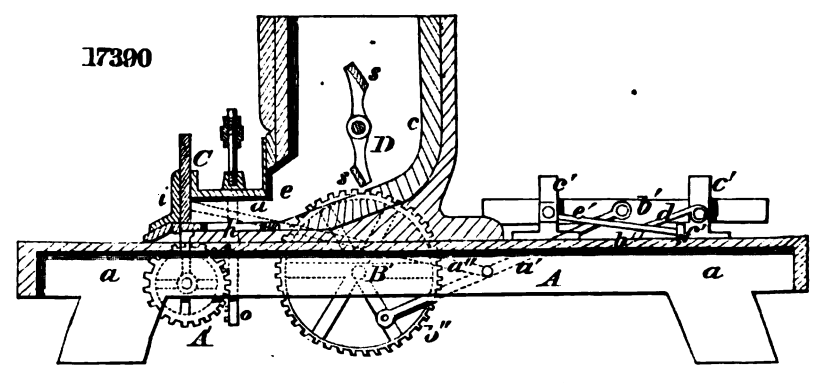

17390

17098

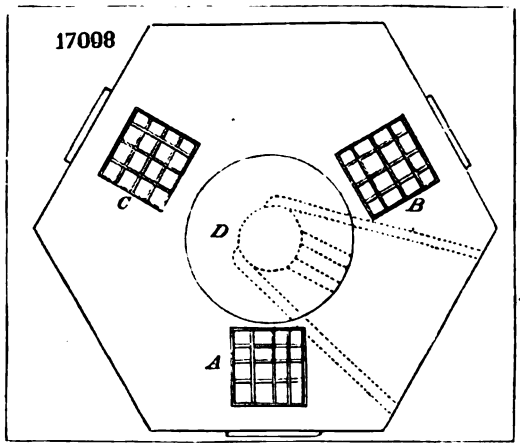

16839

fig.1

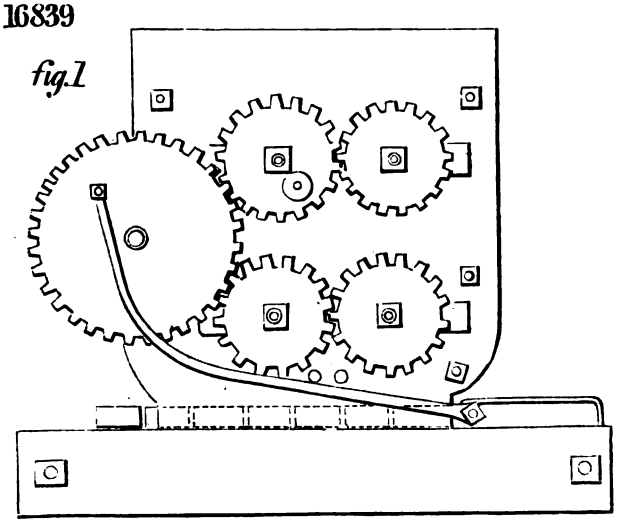

fig.2

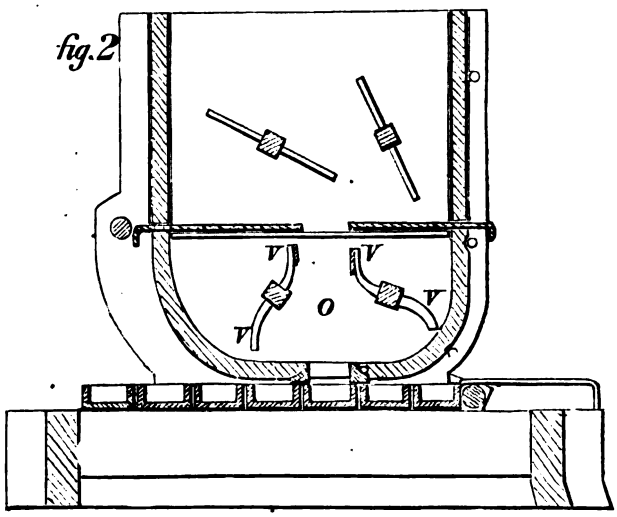

16385

fig. 2

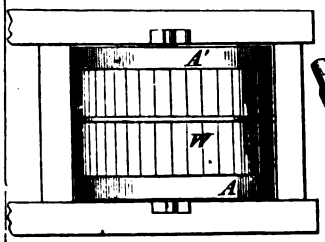

fig. 1

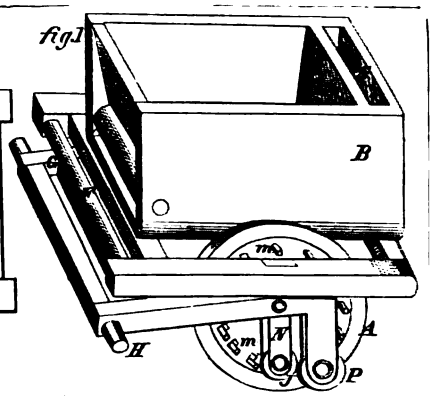

18629

fig 1

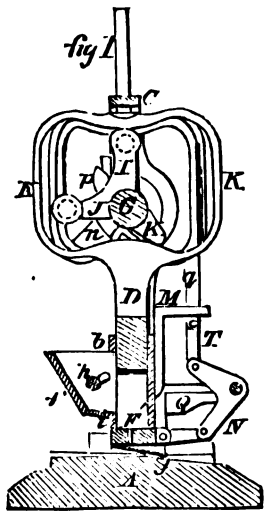

fig 2

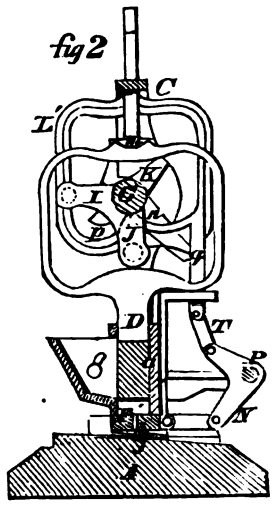

fig 4

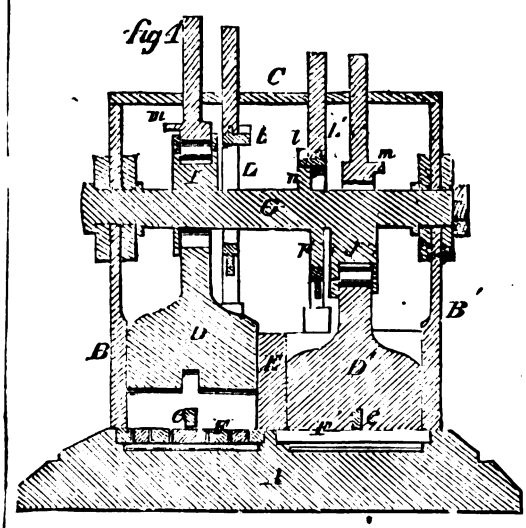

fig 3

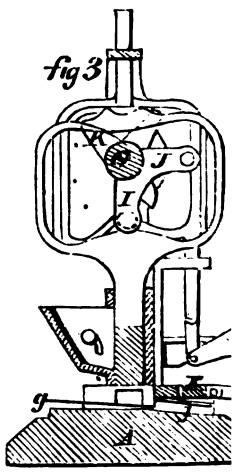

17905 fig. 1 fig. 2

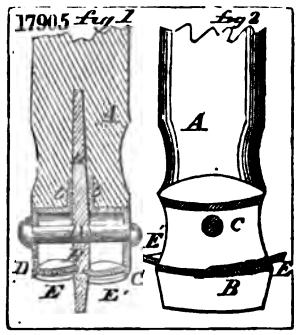

17399

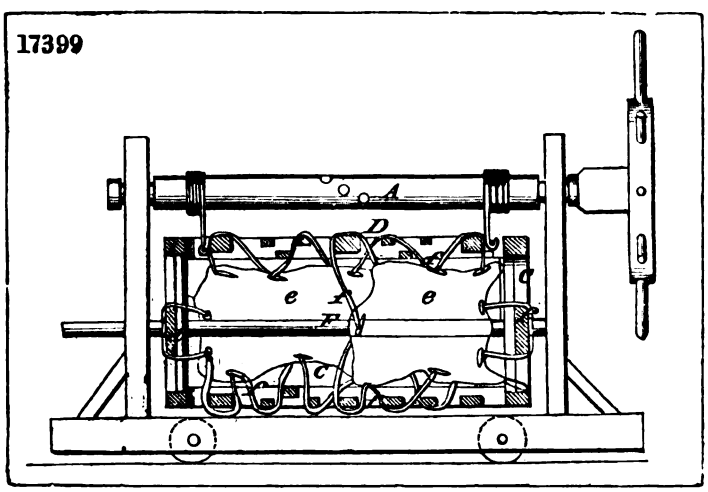

18227

fig. 1

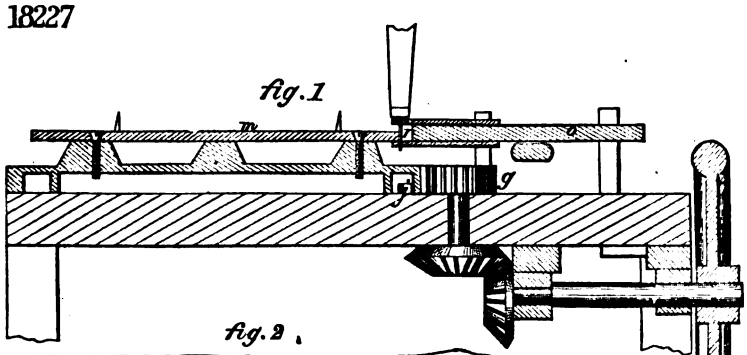

fig. 2

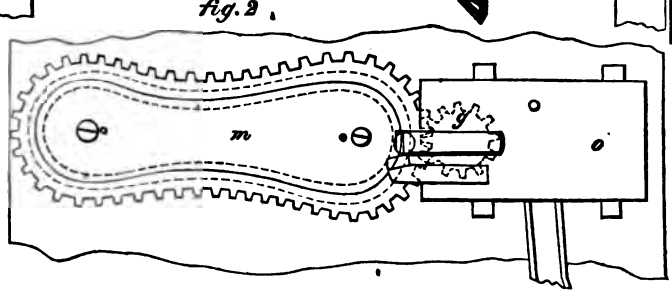

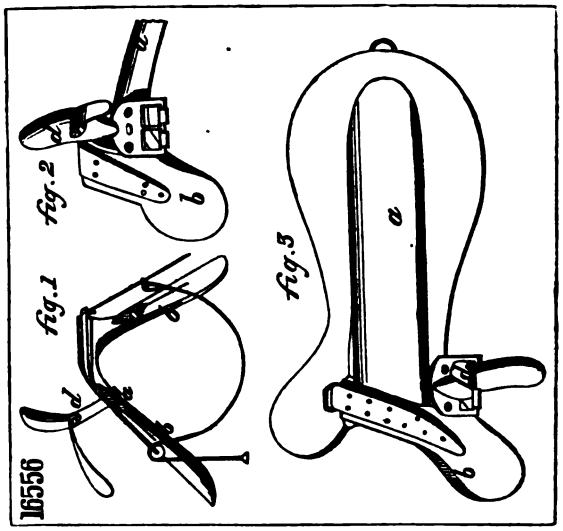
16556
fig.1
fig.2
fig.3

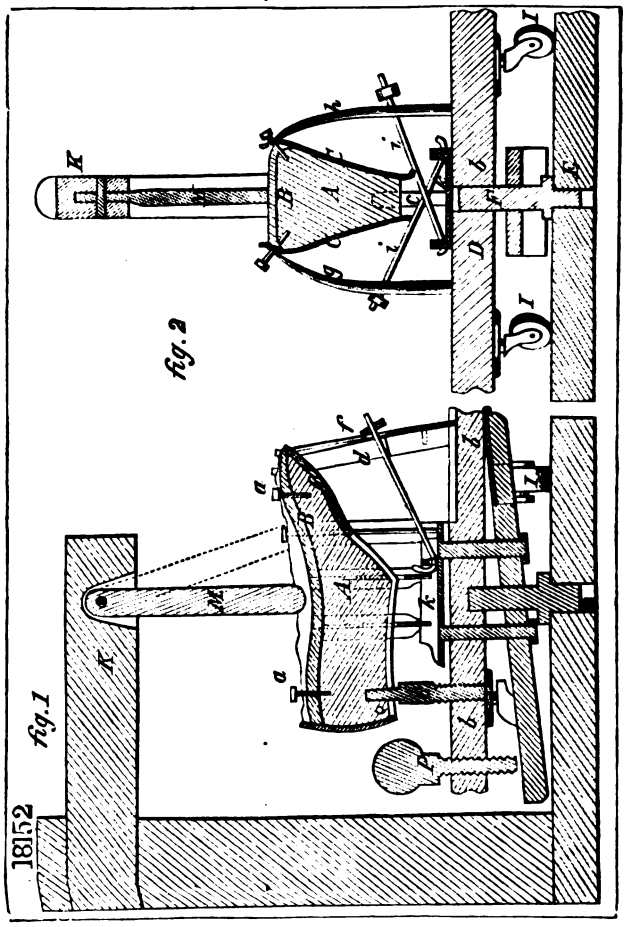
18152
fig.1
fig.2

18441

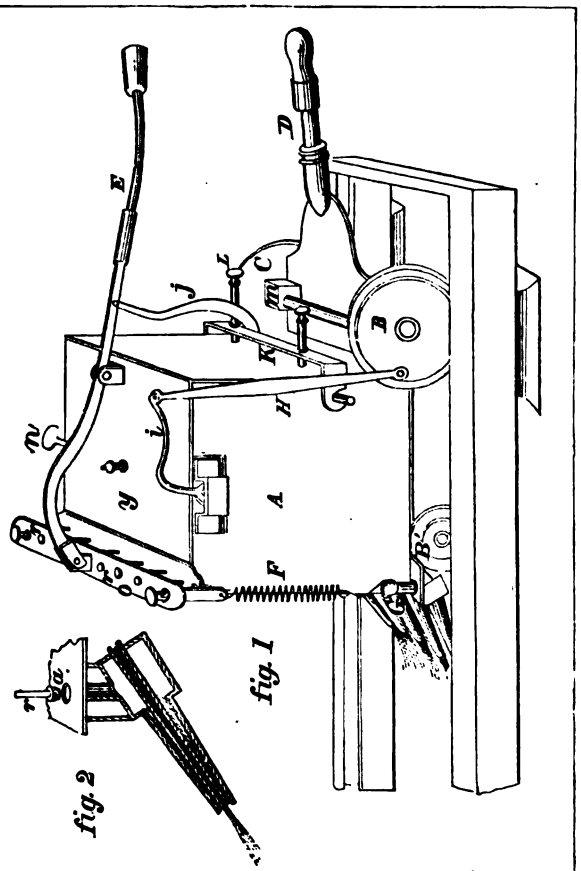

fig. 1

fig. 2

7455

fig1

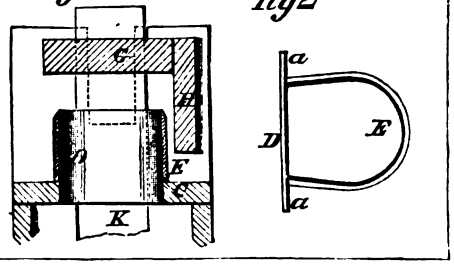

fig2

16347 fig.1

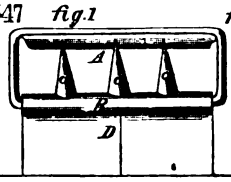

fig.2

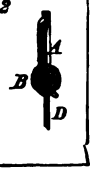

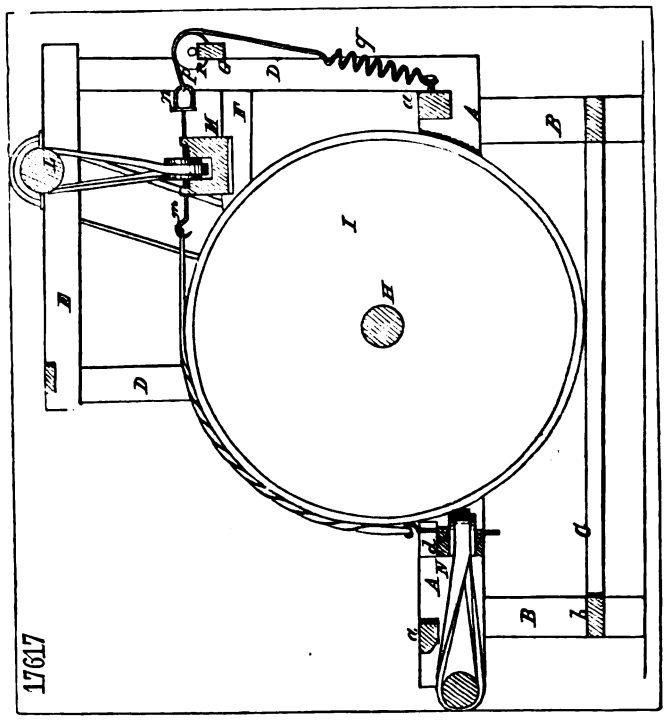
17617

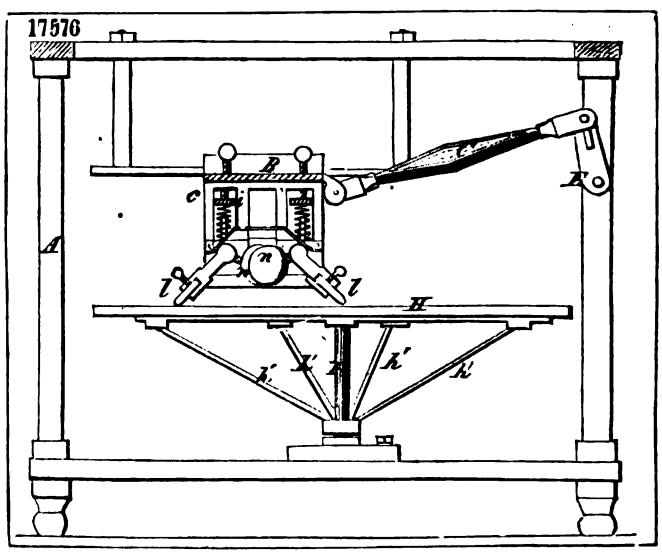
17576

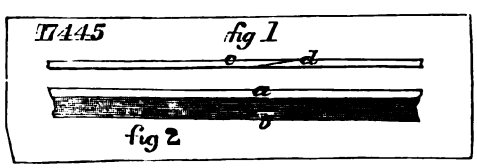
17445
fig 1
fig 2

18614

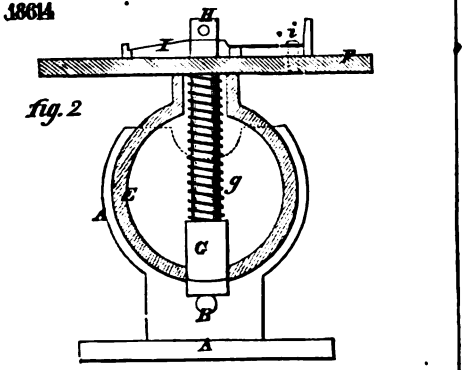

fig. 2

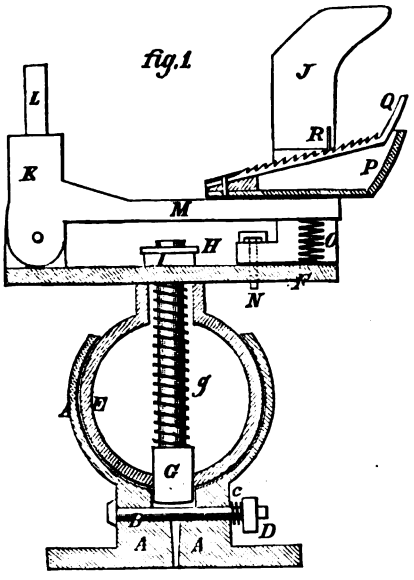

fig. 1

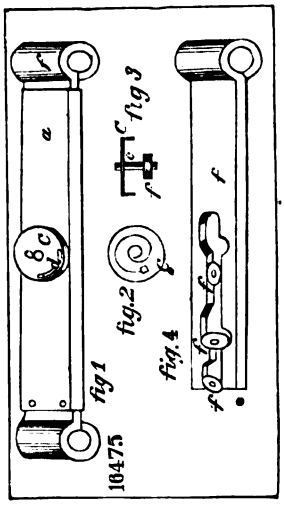

10475

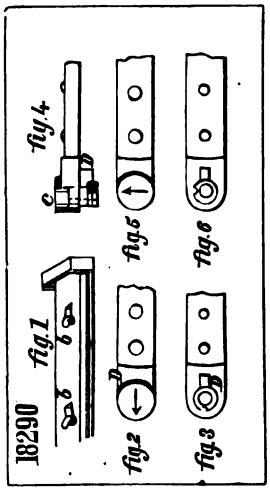

18310

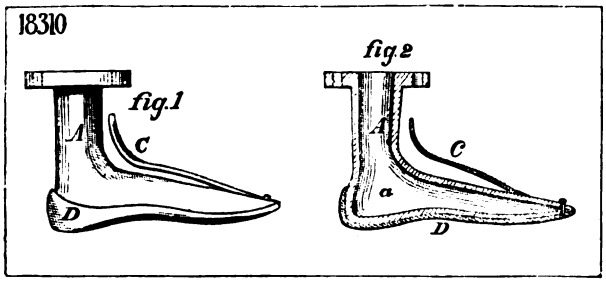

16917

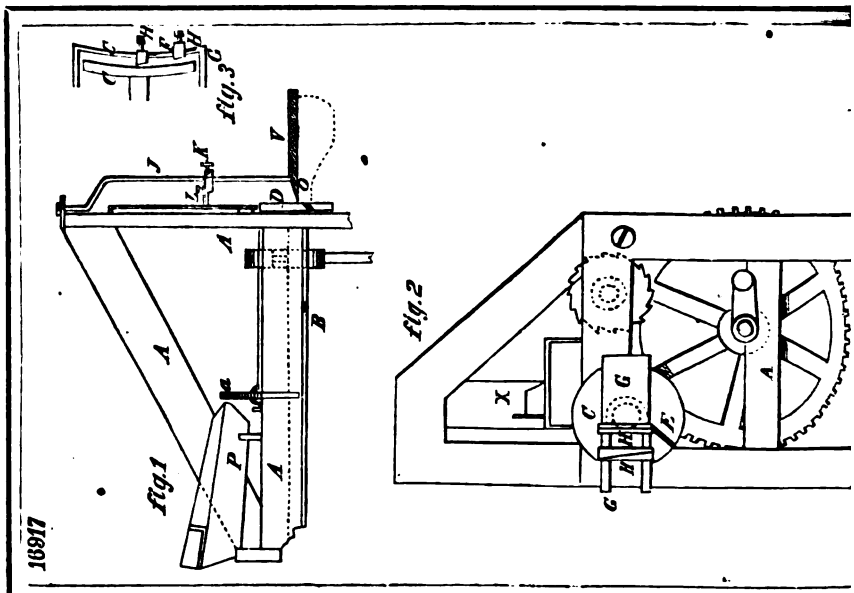

18300

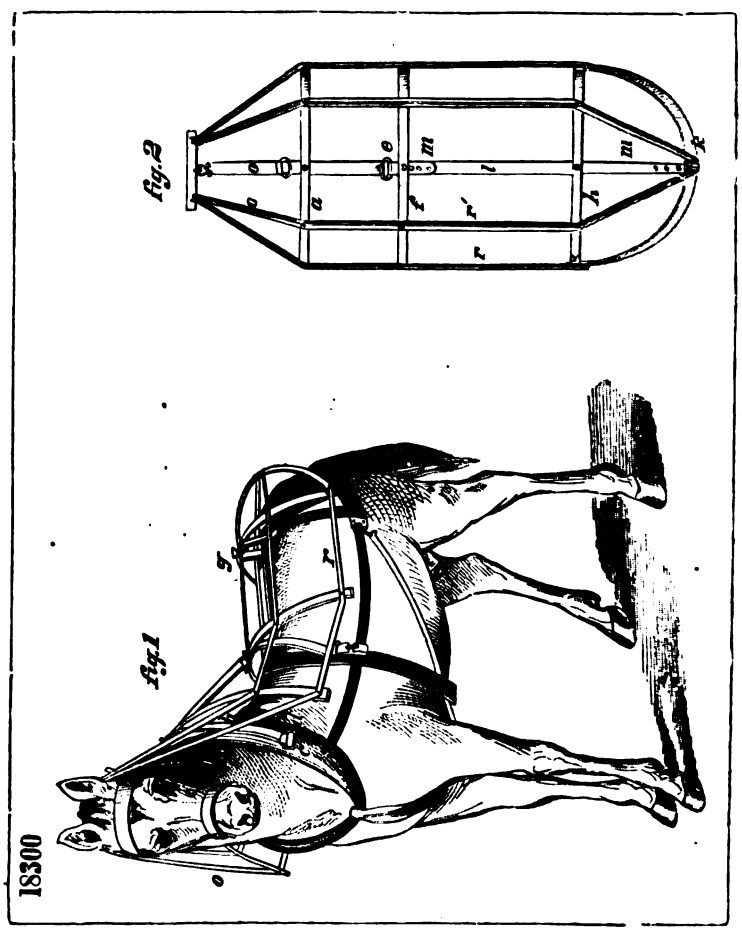

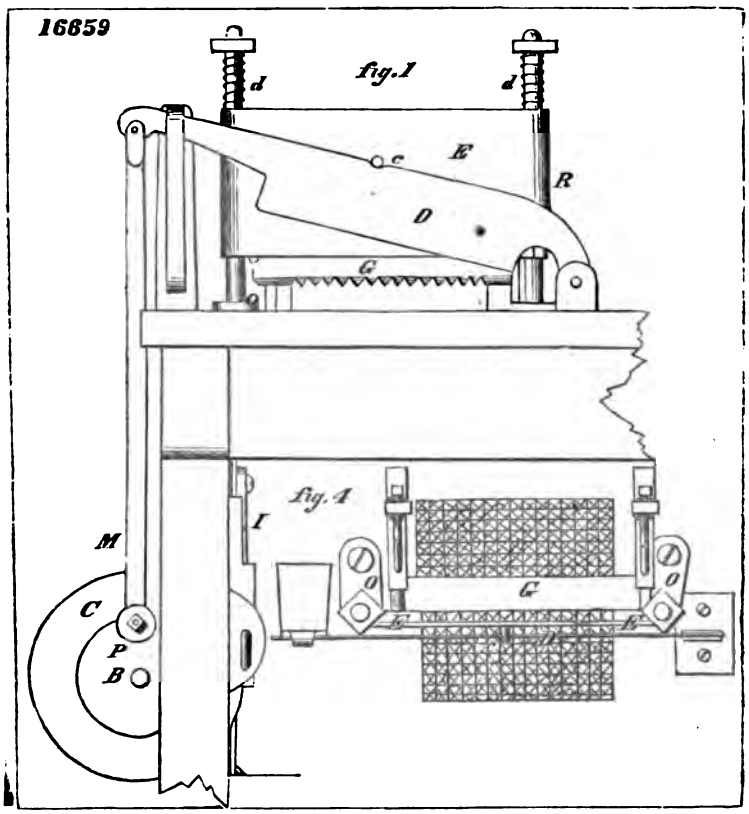
16659
fig. 1
d
d
E
c
R
D
G
fig. 4
I
M
C
P
B
C

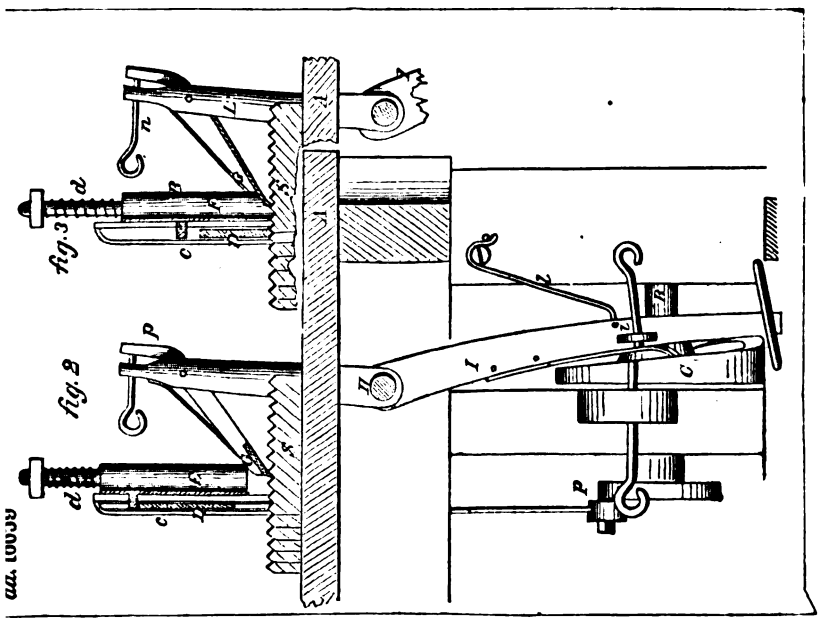
fig. 3
d
c
fig. 2
P
d
c
I
C
P

17471

fig 1

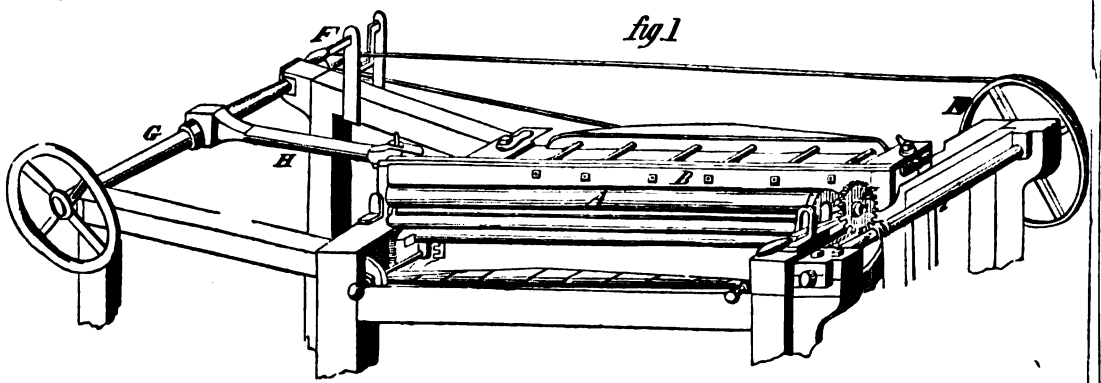

17471 *fig 2*

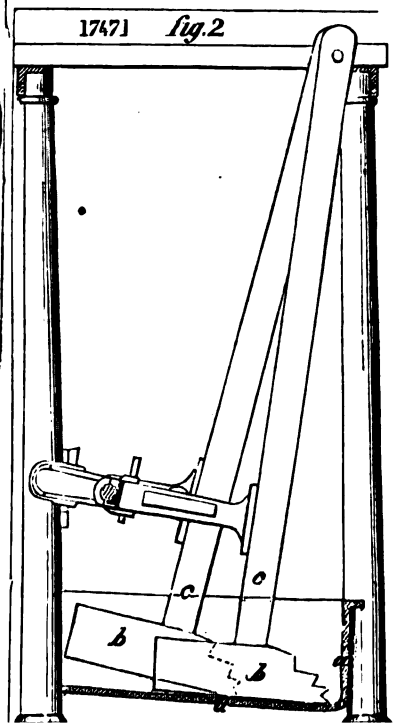

17554

fig 1

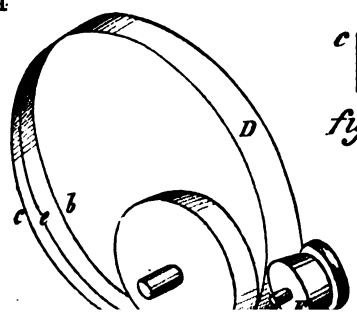

fig 2

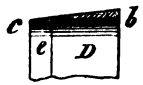

fig 3

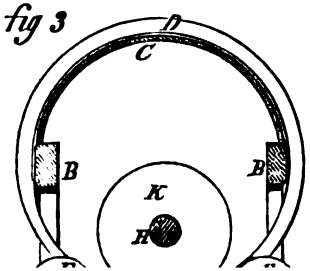

16530

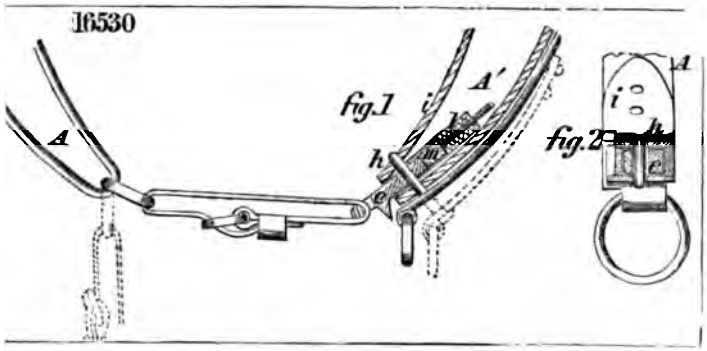

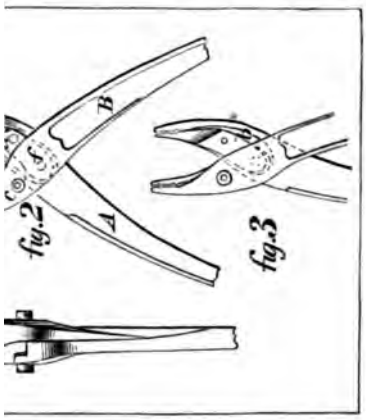

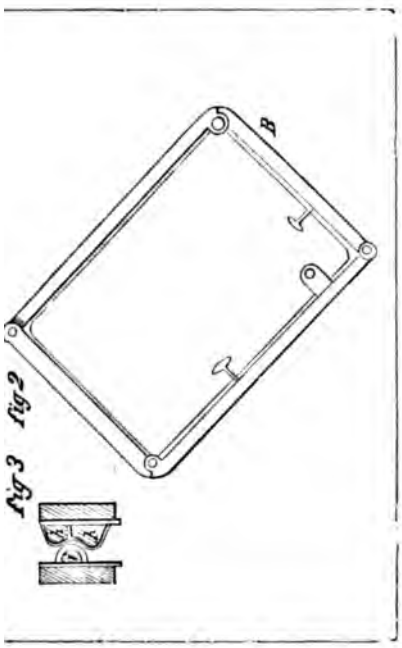

18780

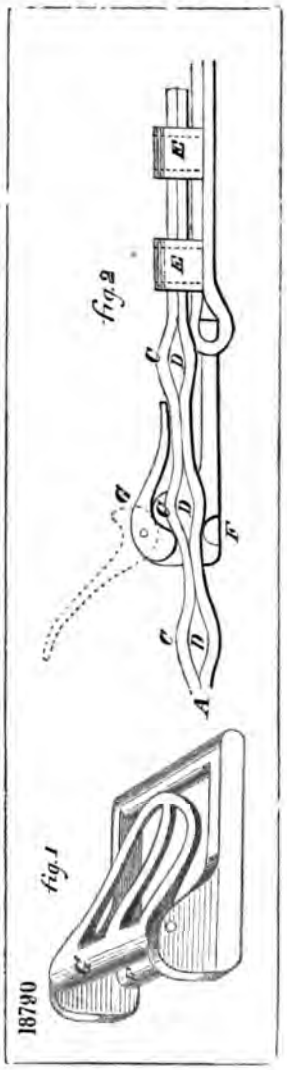

18996

fig 1

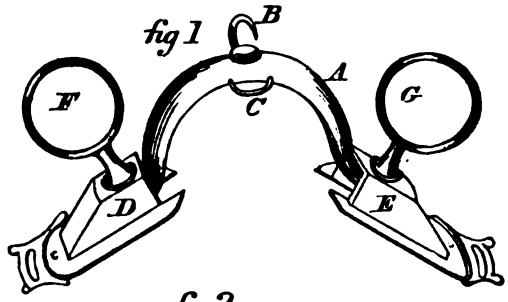

fig 2

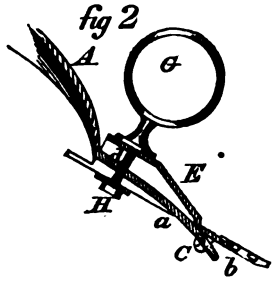

17160

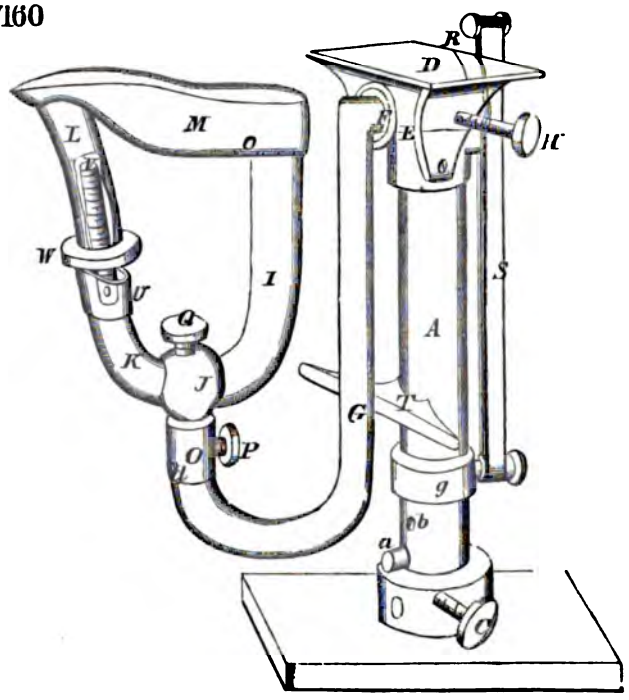

17117

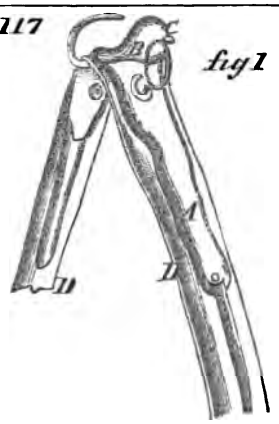

fig 1

fig 2

fig 4

fig 3

16338

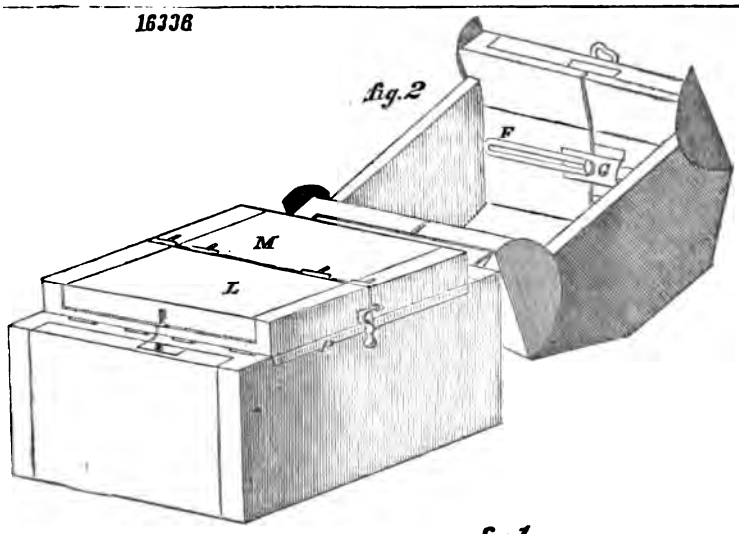

fig. 2

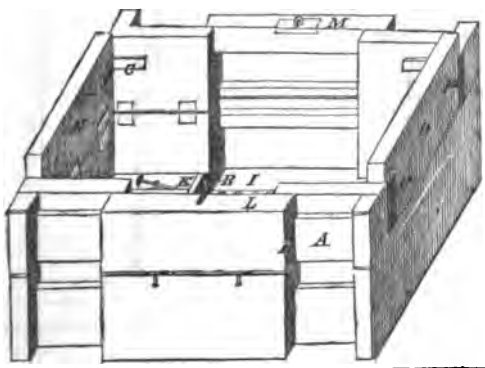

fig 1

18237 fig. 2 fig. 1 fig. 3

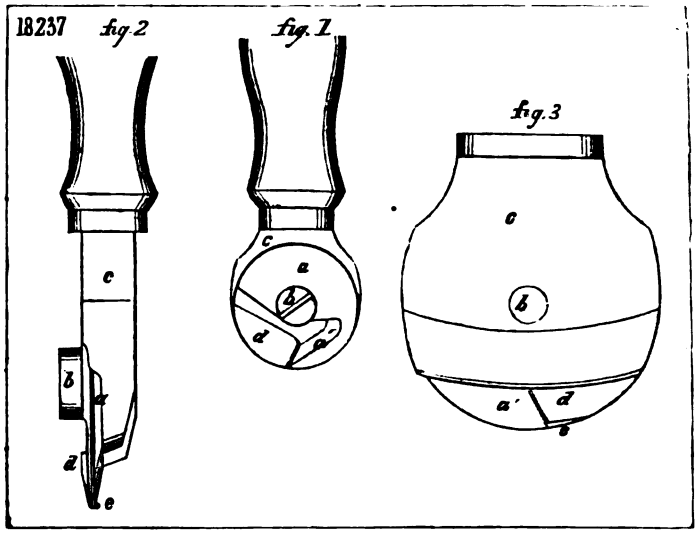

16660

fig. 1

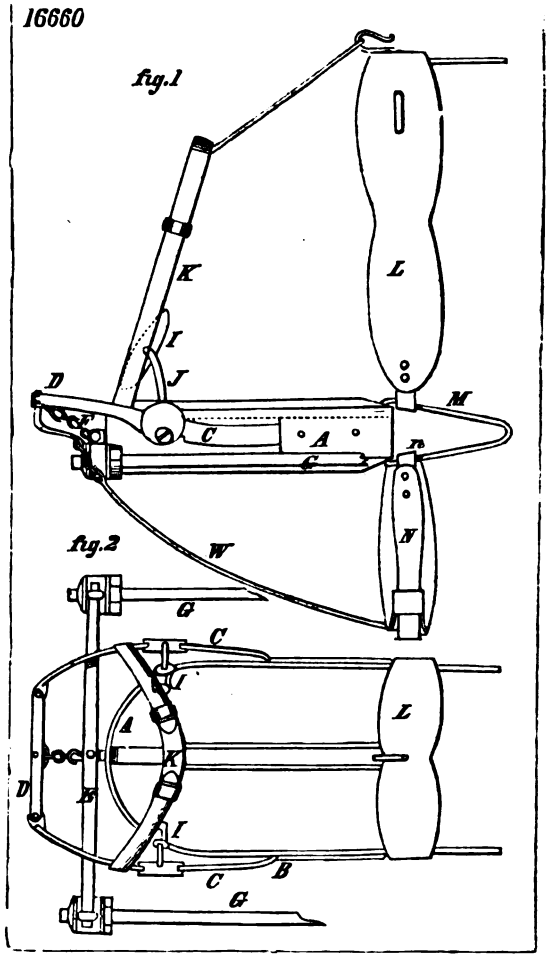

545

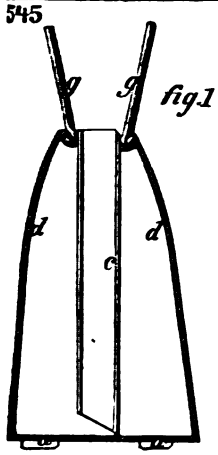

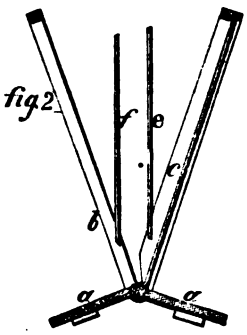

17268

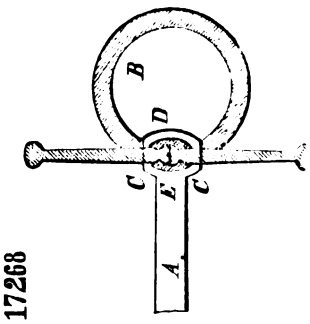

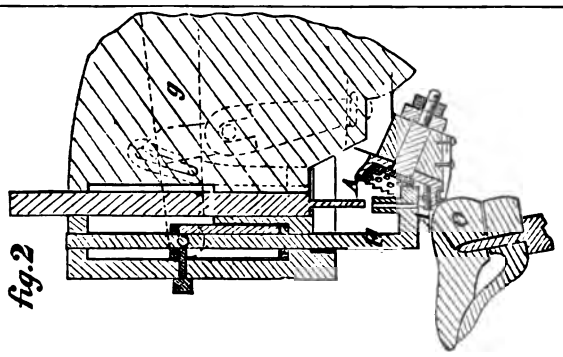

17998

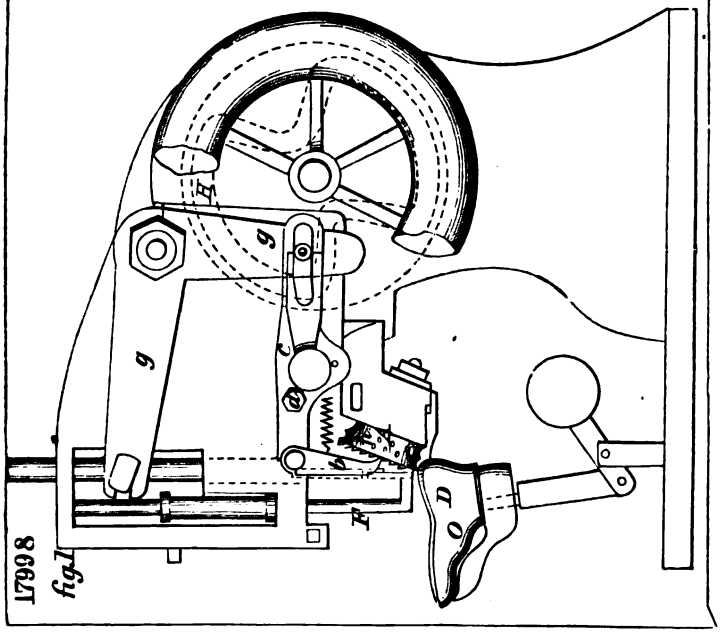

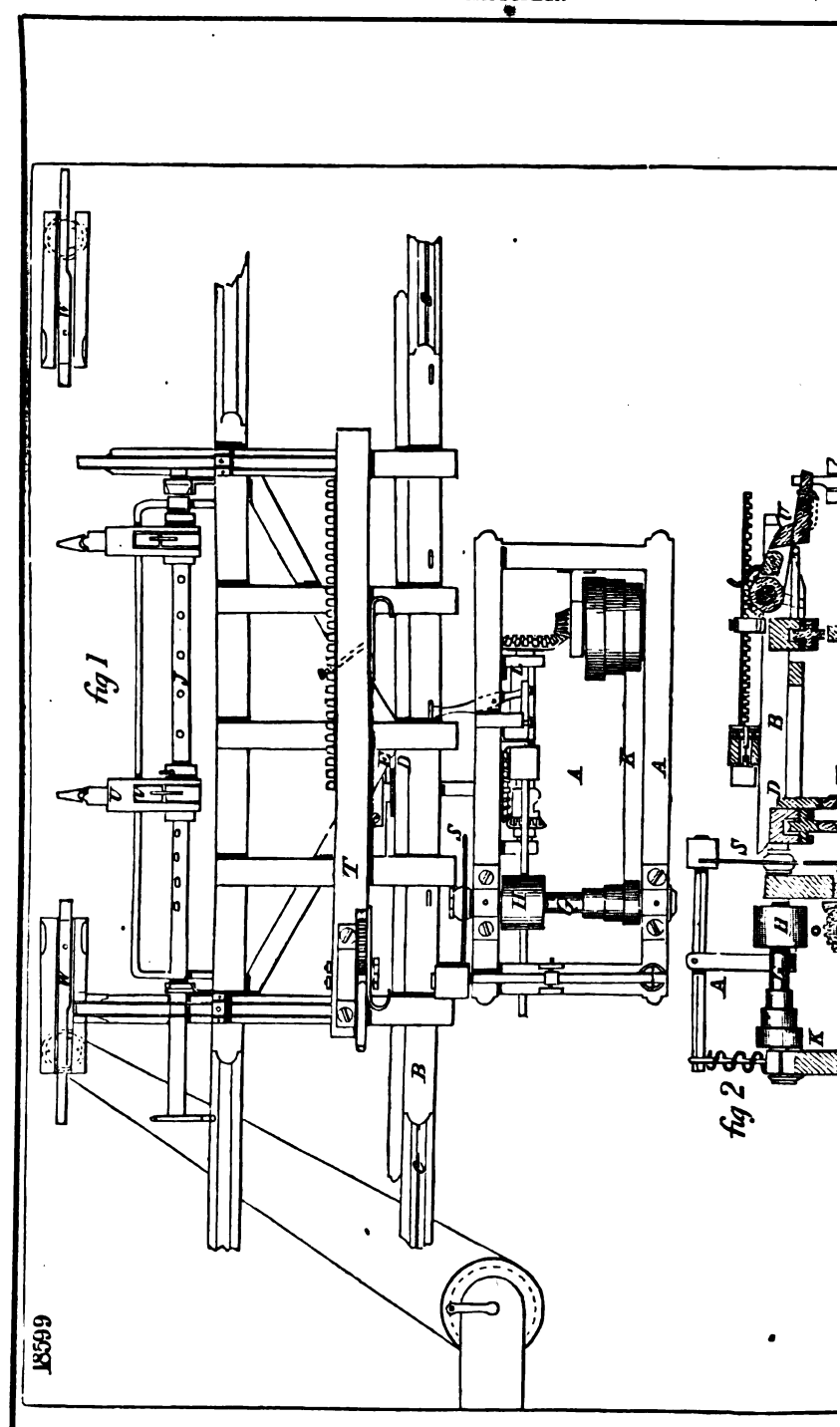
fig 1
fig 2
18599

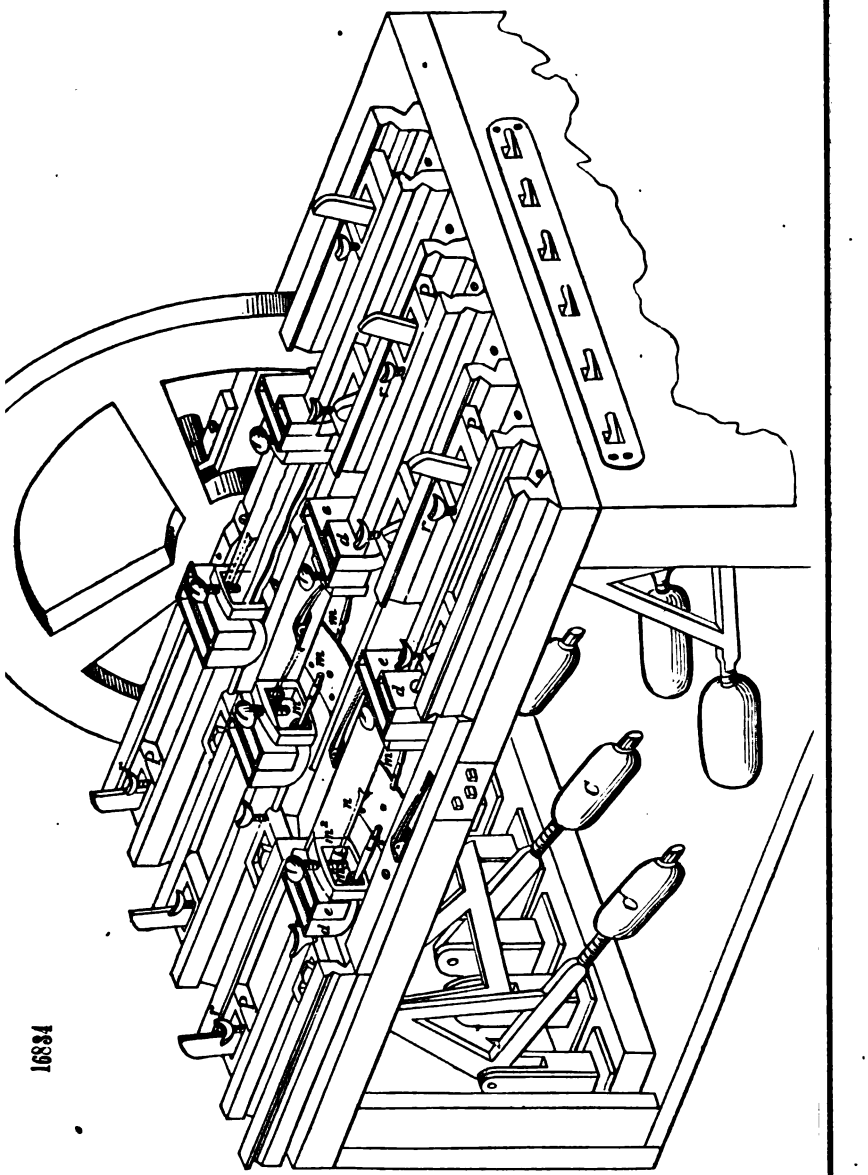

16884

18879

fig.1

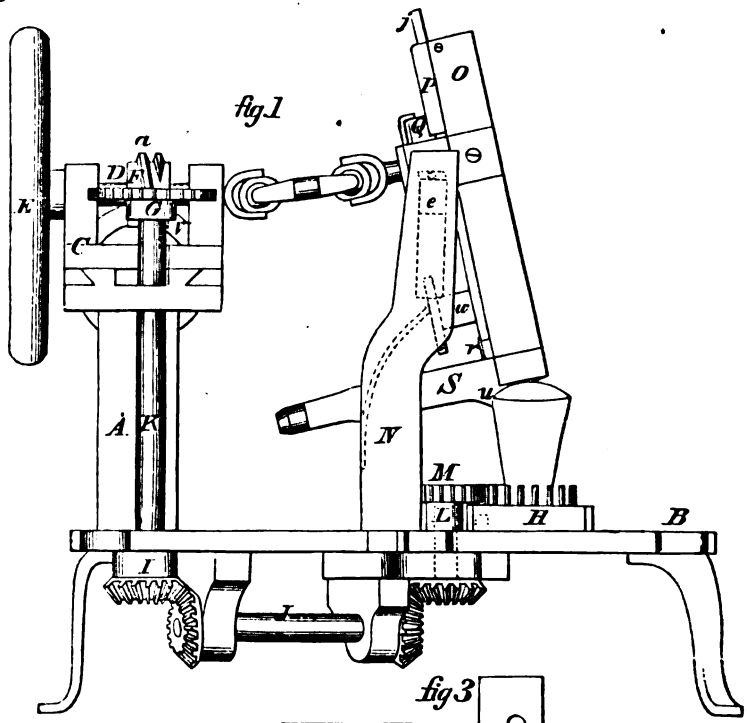

fig.2

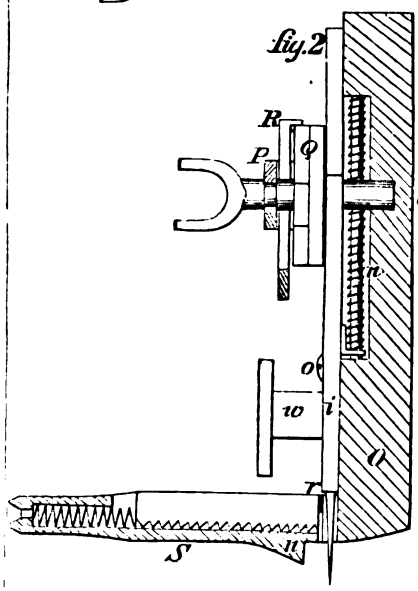

fig.3

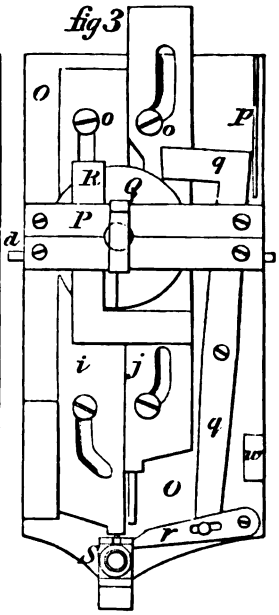

fig.4

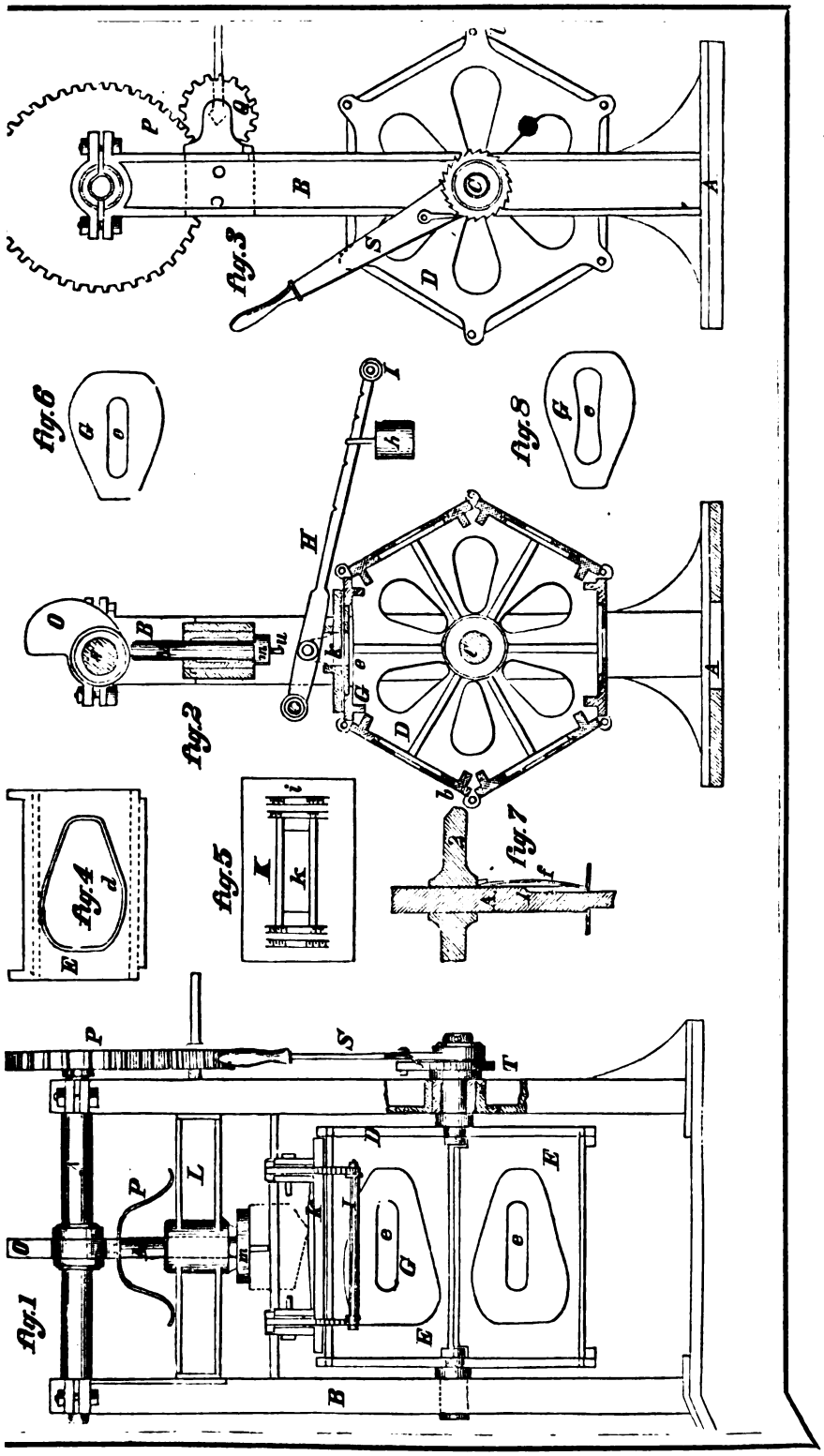
Fig.1
Fig.2
Fig.3
Fig.4
Fig.5
Fig.6
Fig.7
Fig.8

17902

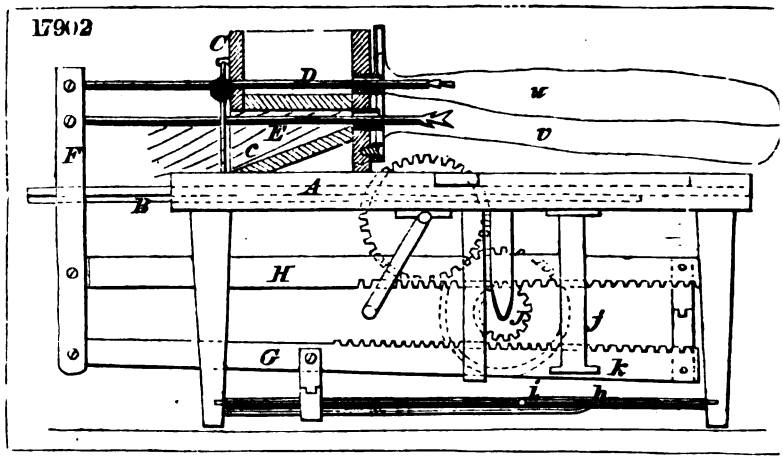

18594

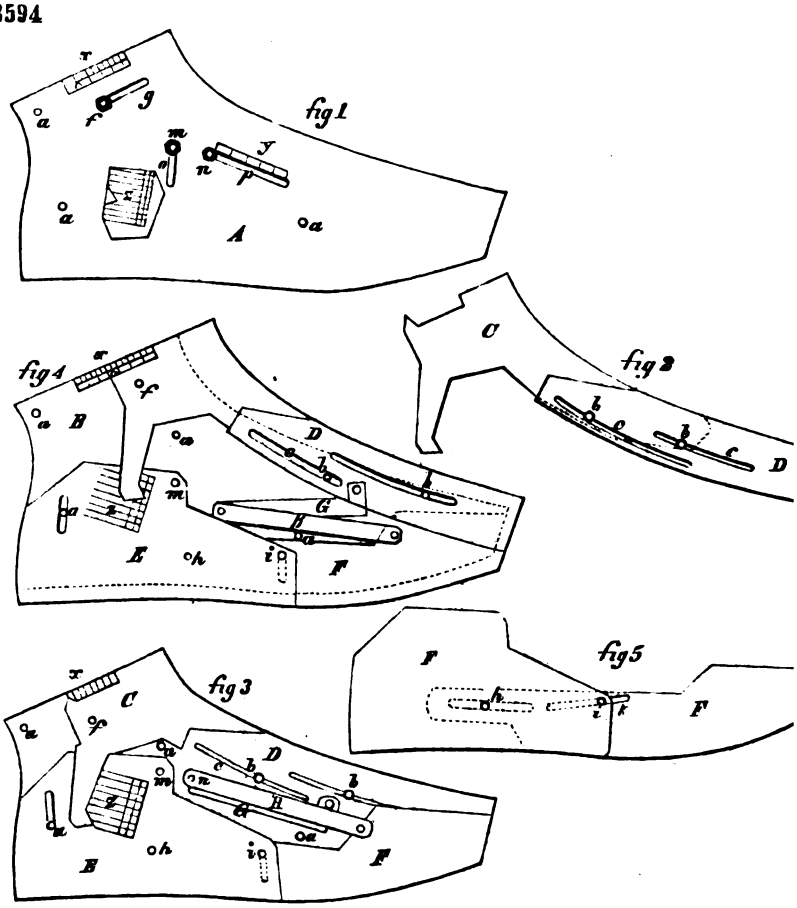

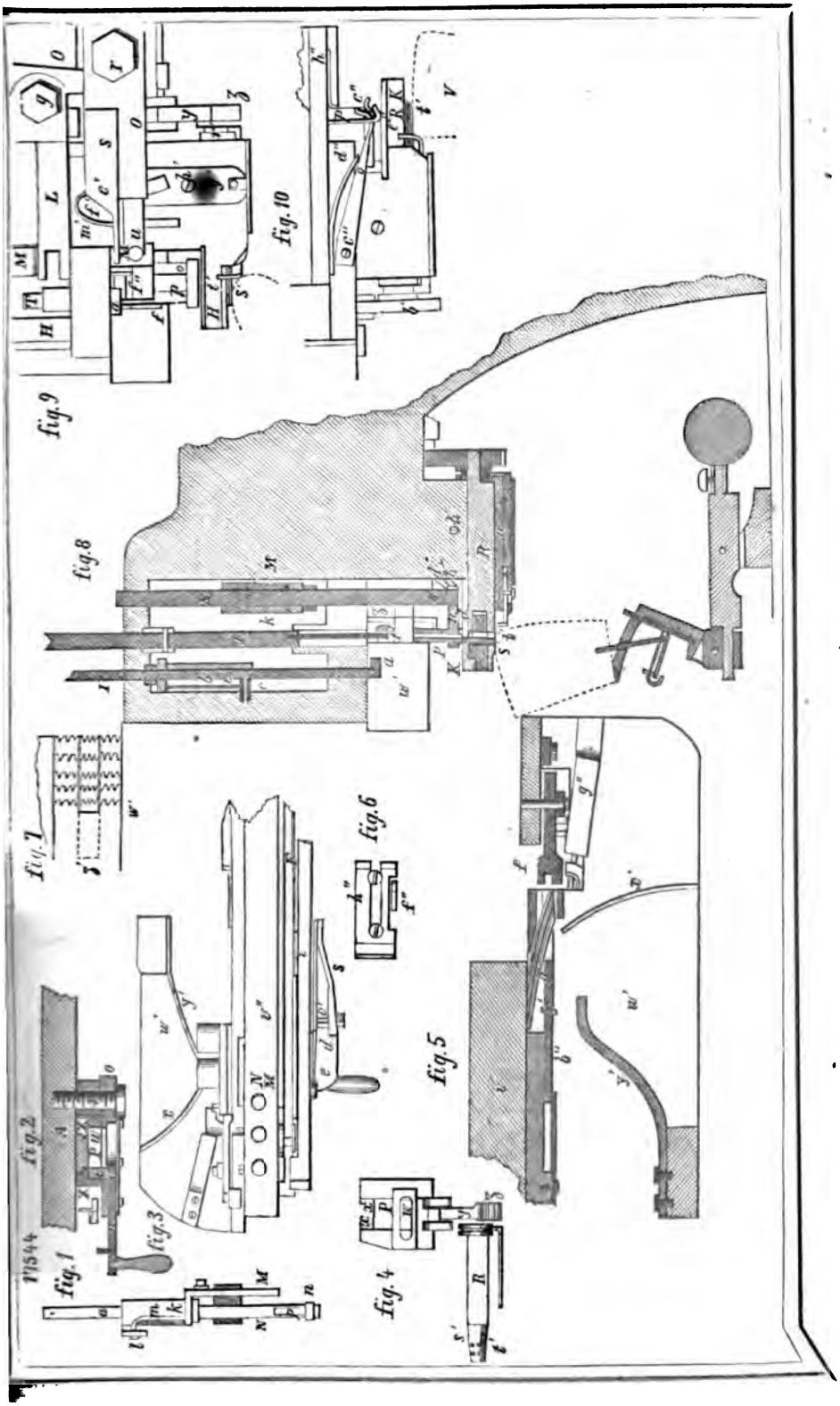
fig. 1
fig. 2
fig. 3
fig. 4
fig. 5
fig. 6
fig. 7
fig. 8
fig. 9
fig. 10

18170

fig. 1

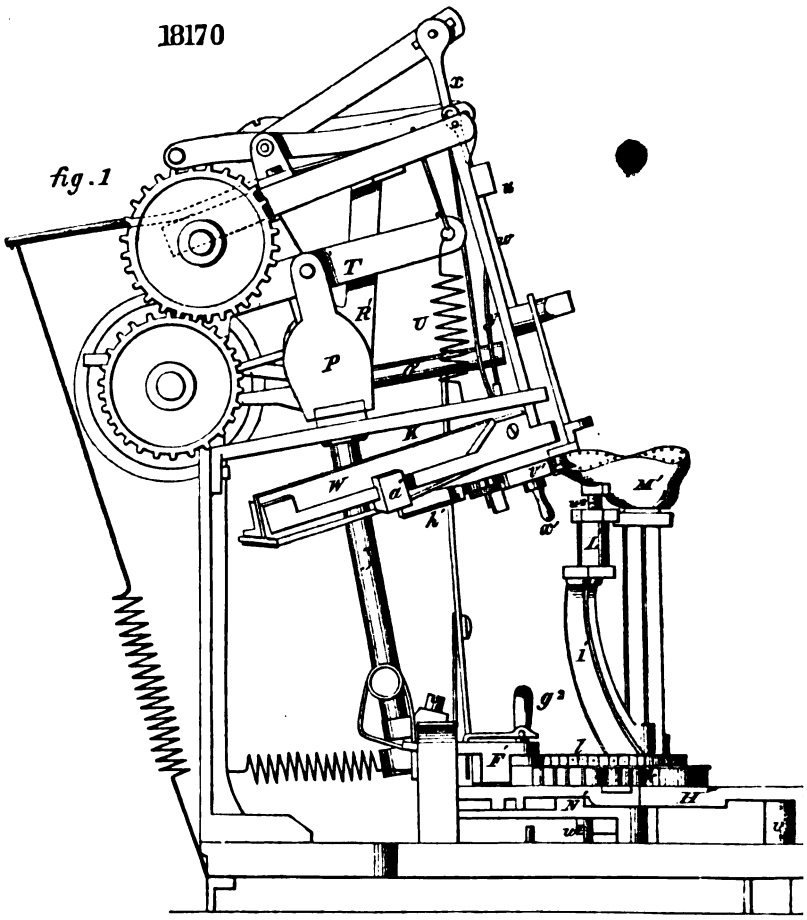

fig. 4

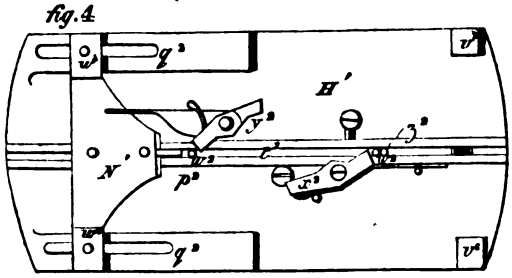

fig. 5

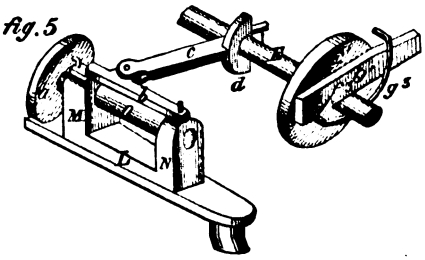

fig. 6

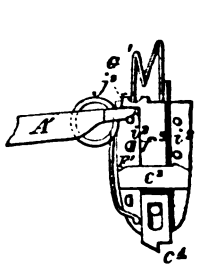

l 18170

fig. 2

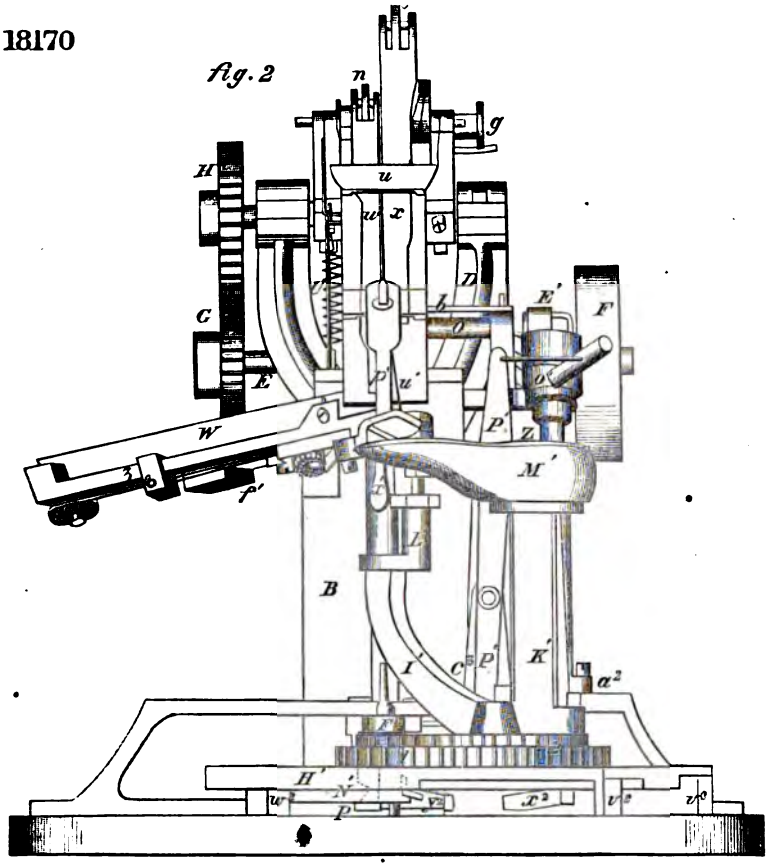

fig. 3

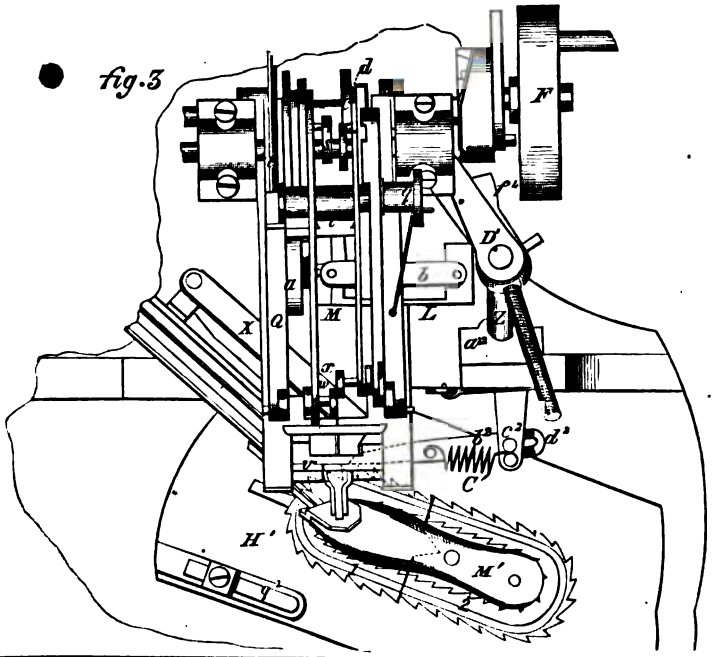

17051

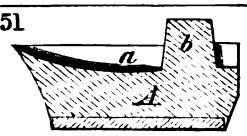

18583

fig 1

fig 2

17603

fig. 1

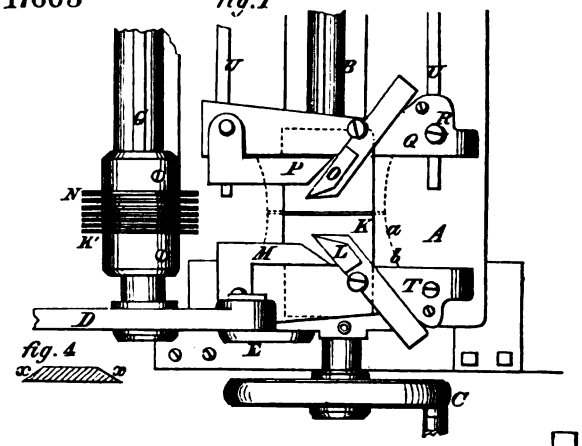

fig. 4

fig. 3

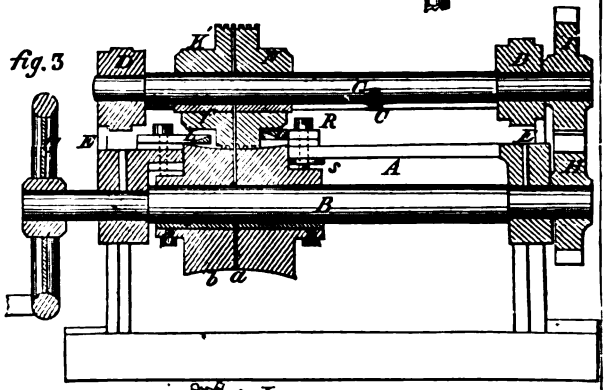

fig. 2

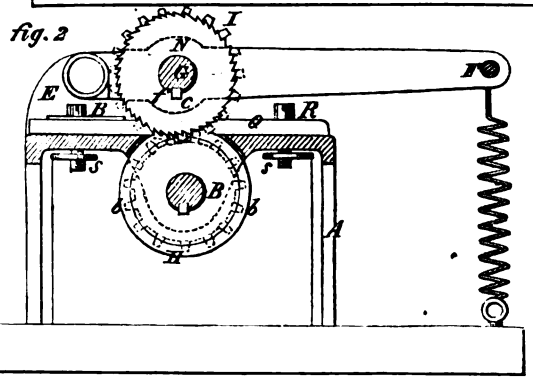

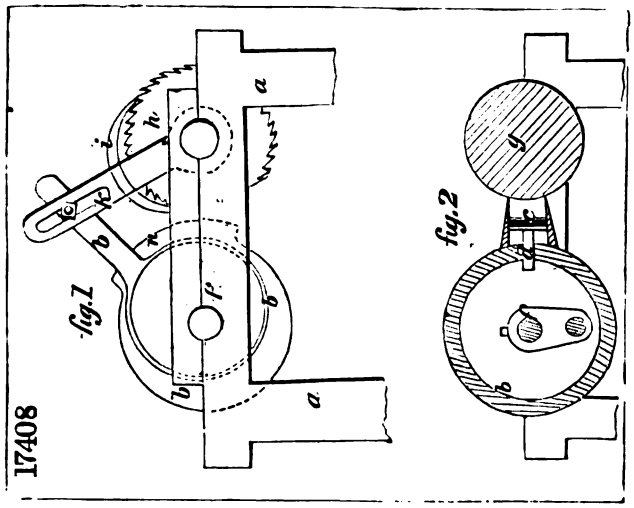
17408
fig.1
fig.2

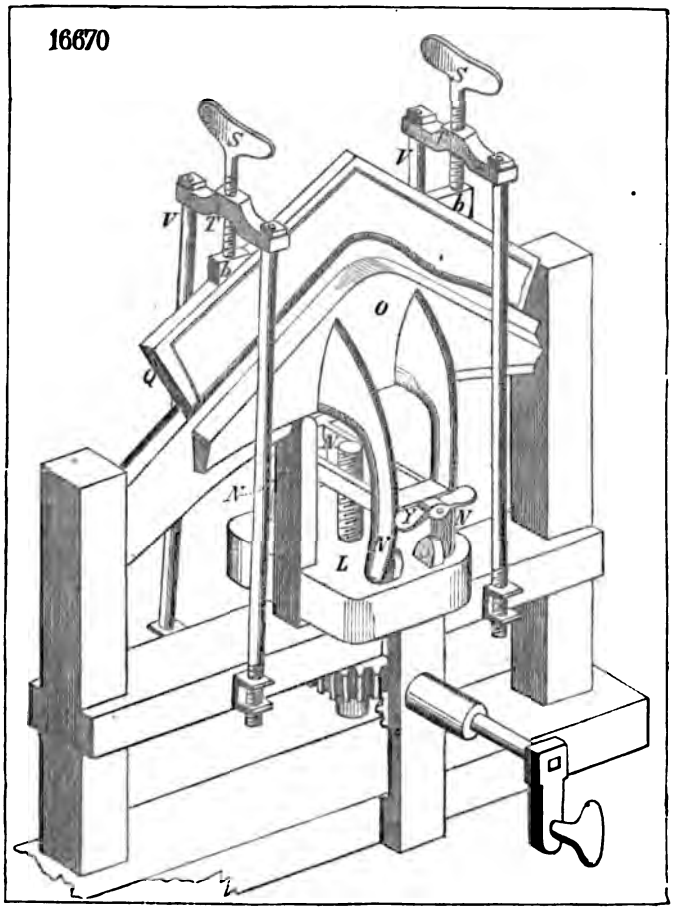
16670

17524

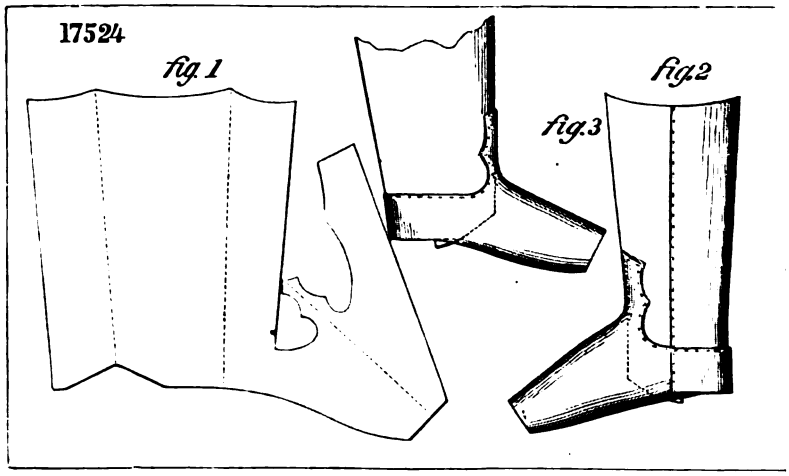

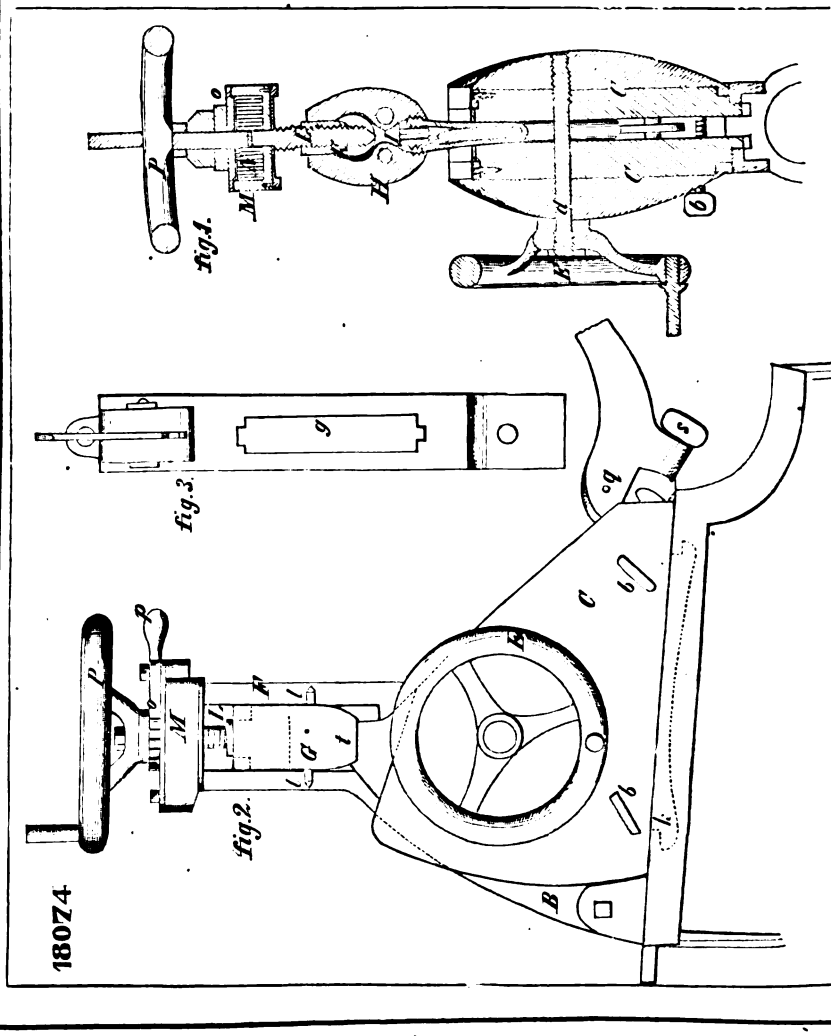

17947

fig. 2

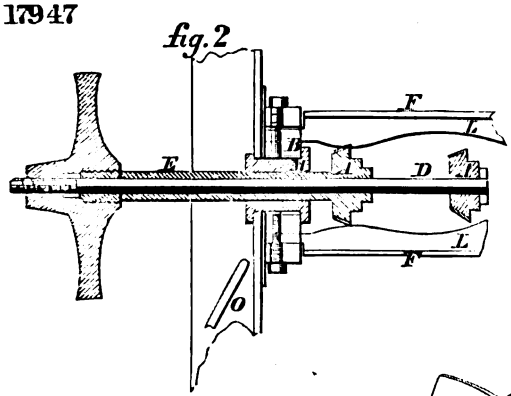

fig. 1

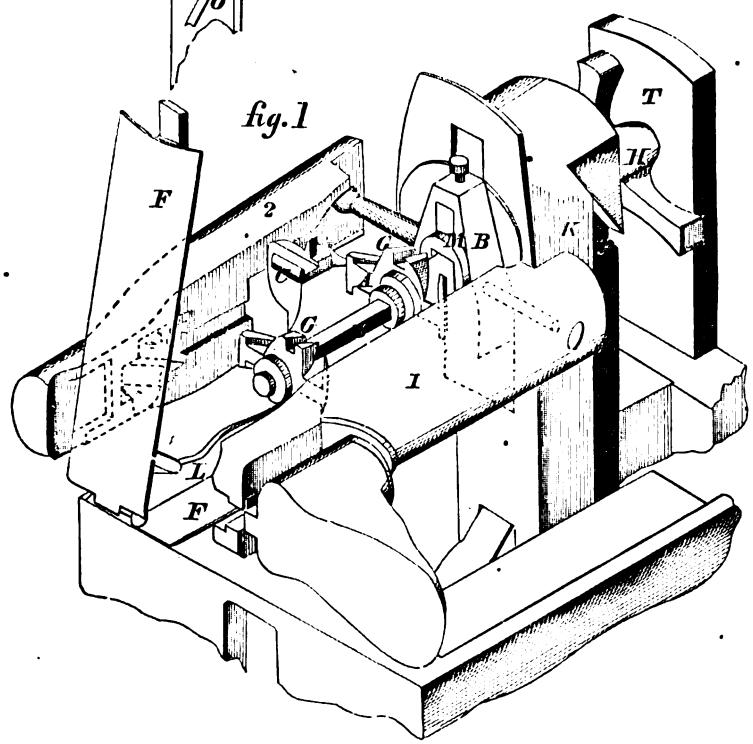

16345

fig. 2

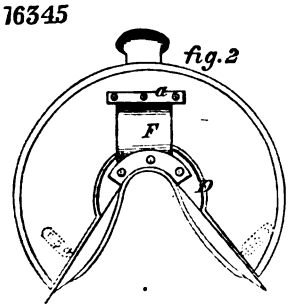

fig. 1

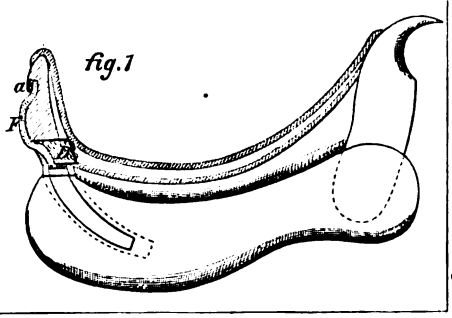

16417

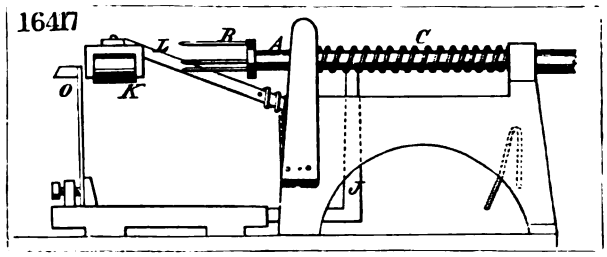

18476

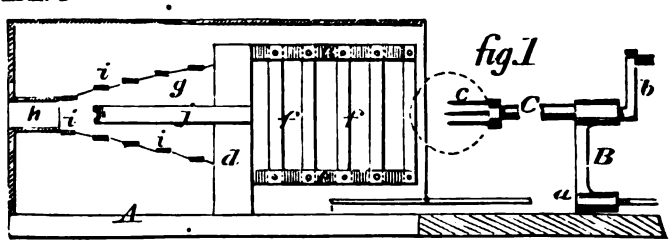

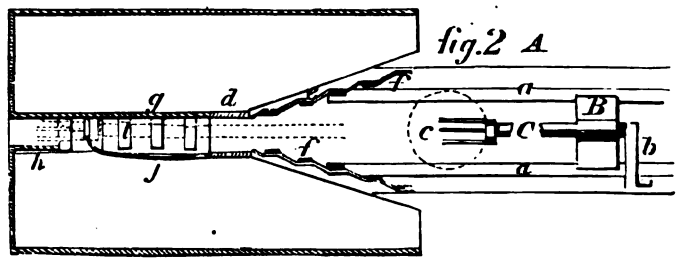

17484

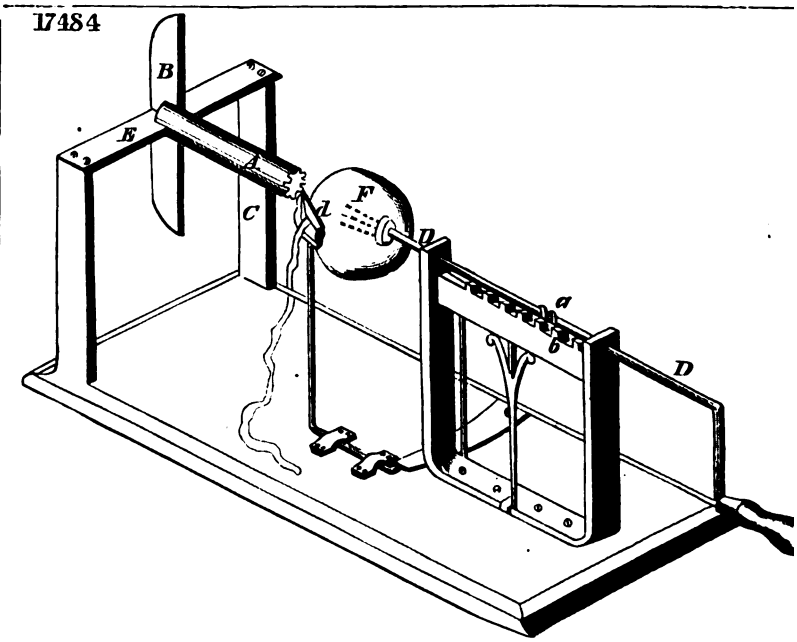

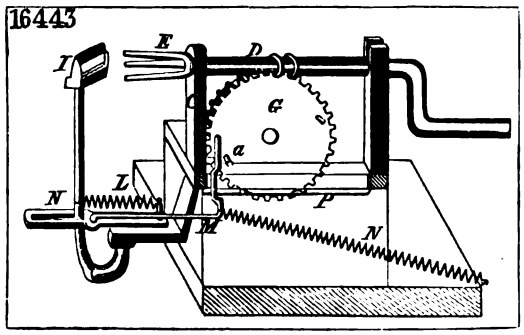
16443
E
D
I
G
a
N
L
M
N

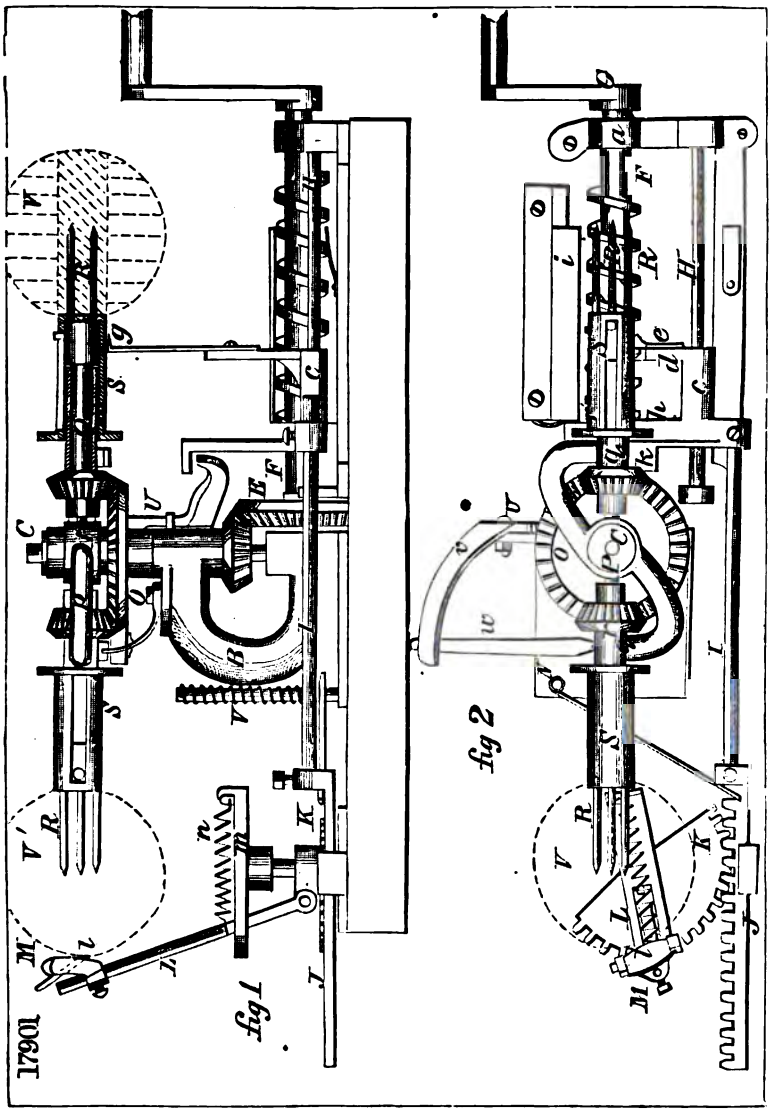
17901
Fig 1
Fig 2

16517

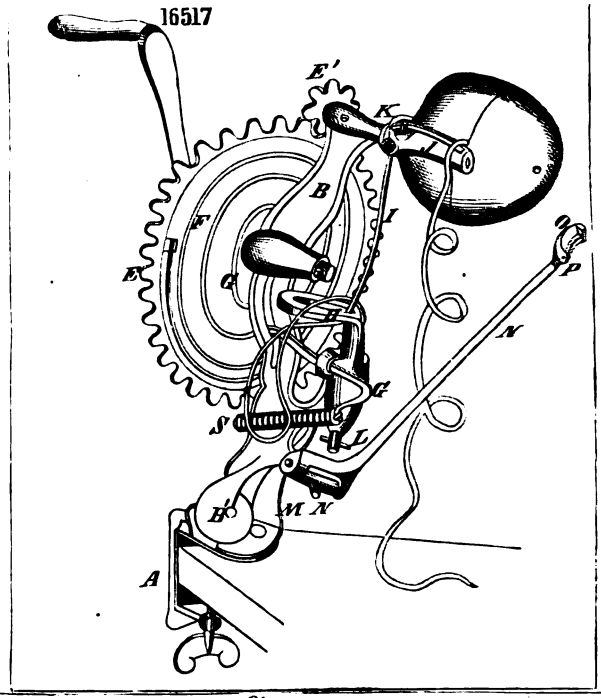

16666

fig. 1

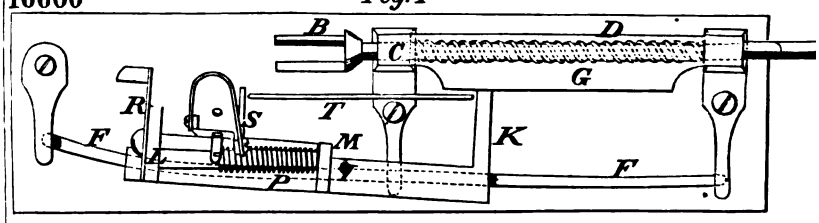

fig. 2

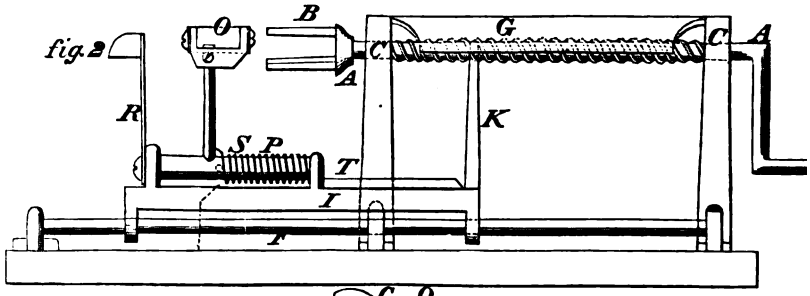

fig. 3

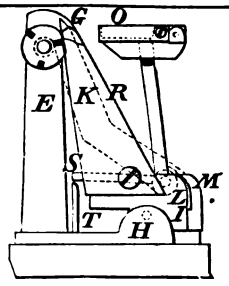

17282

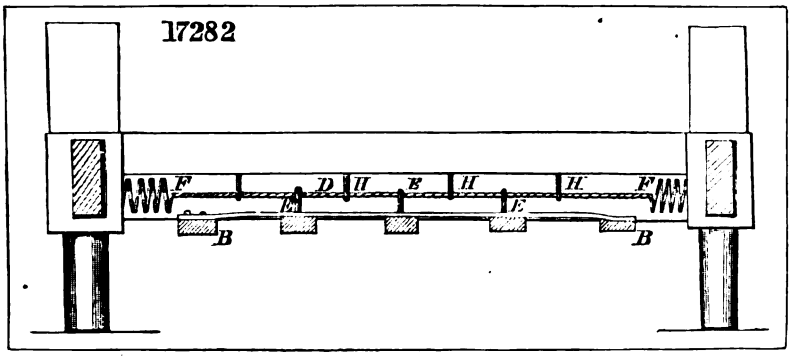

16843

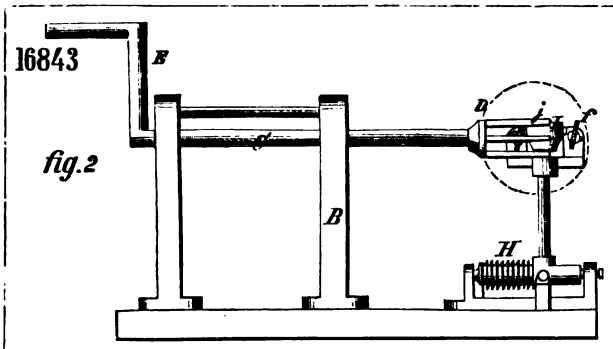

fig.2

fig.3

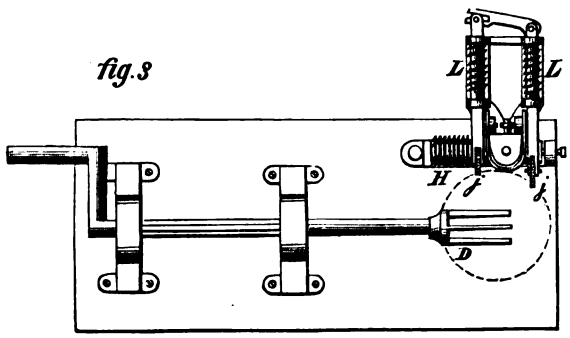

fig.1

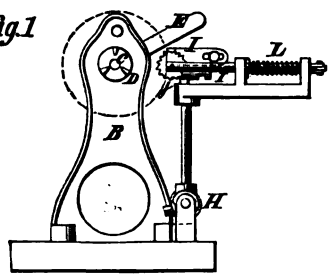

18139

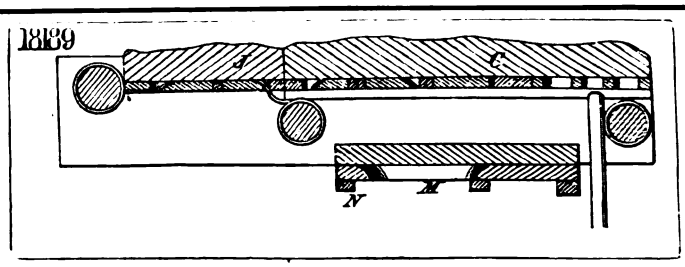

17603 fig 1

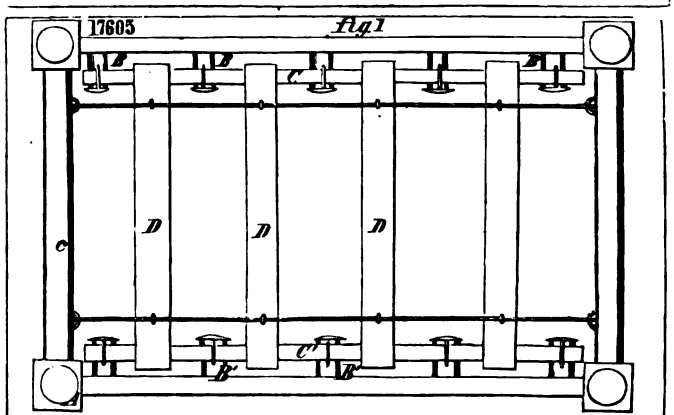

fig 2

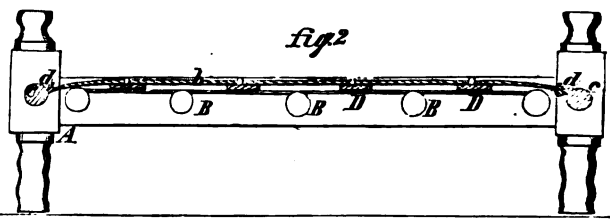

17558

fig 1

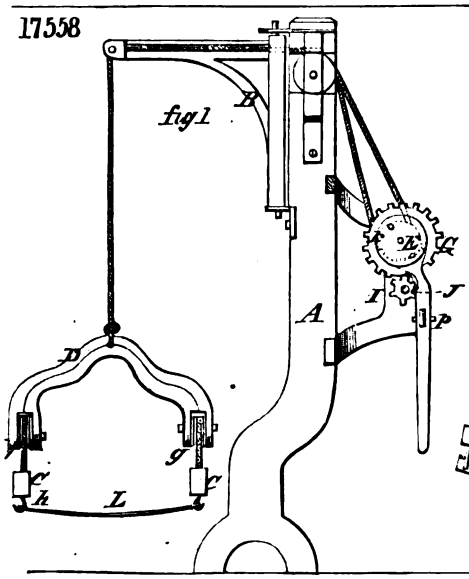

fig 2

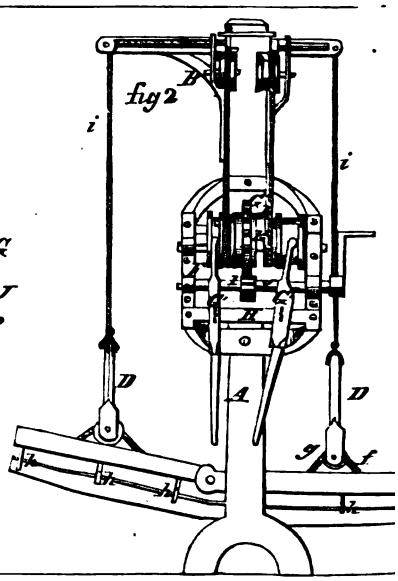

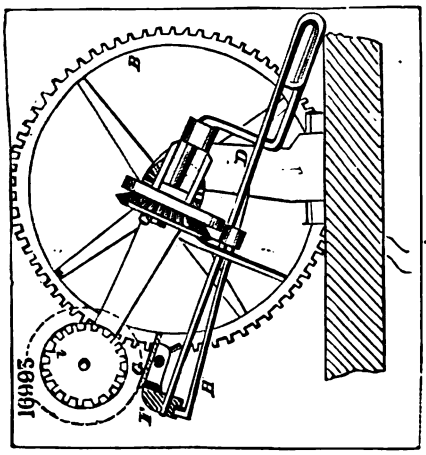
16495

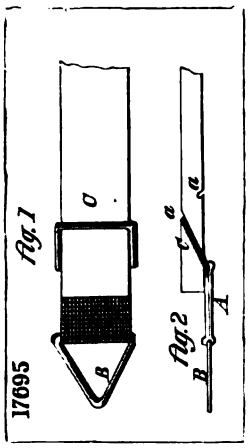
17695
fig. 1
fig. 2

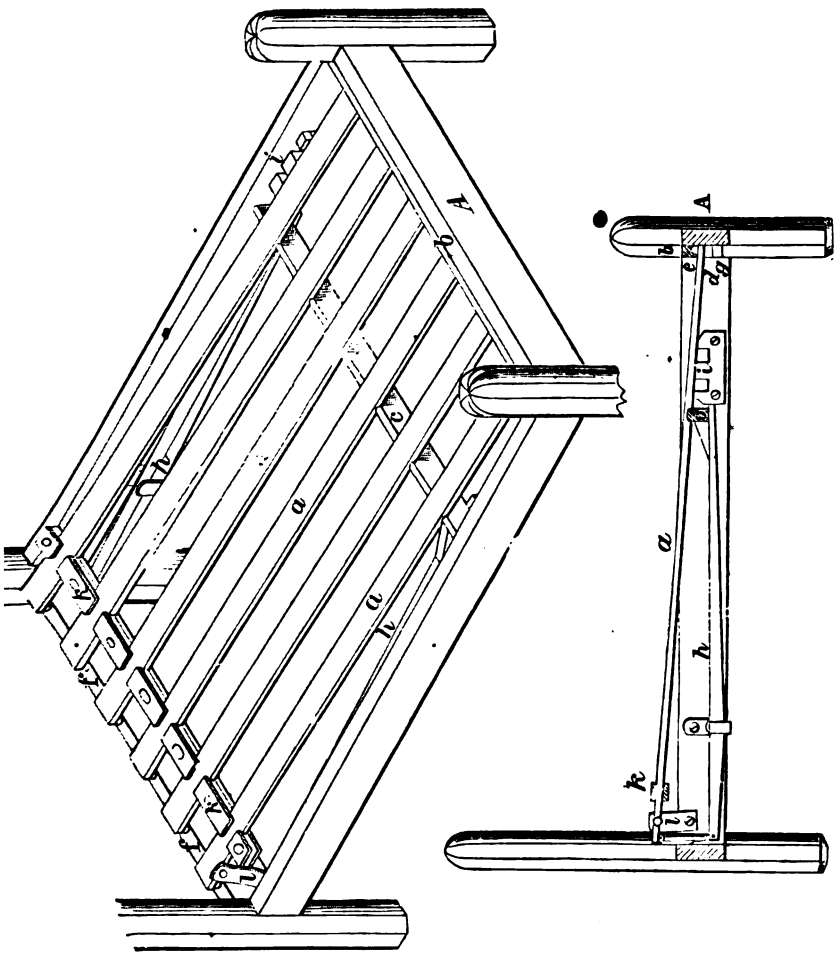

17488

fig.1

fig.2

17783

fig.3

fig.2

fig.1

18078

fig.1

fig.2

19008

fig.1

fig.2

16946

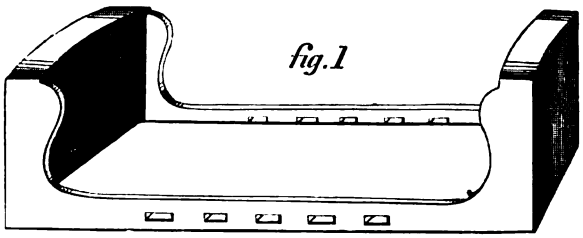

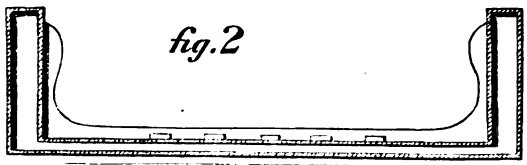

17818

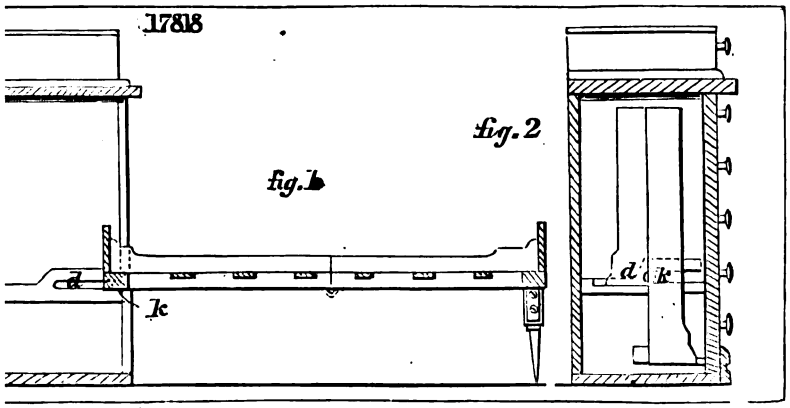

17569

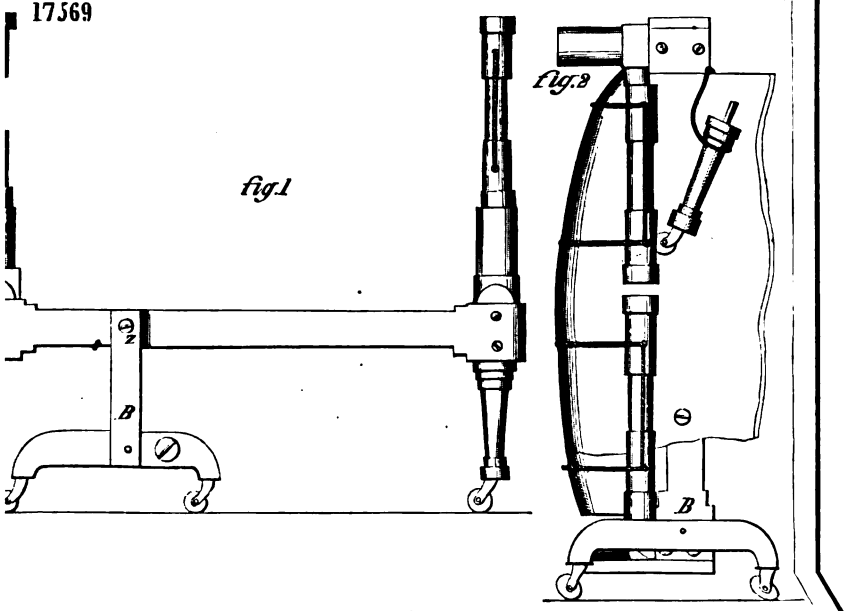

17281

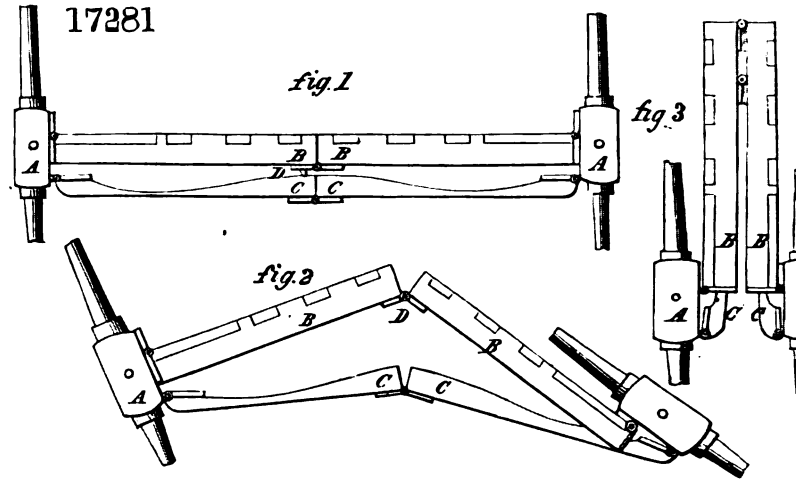

18902

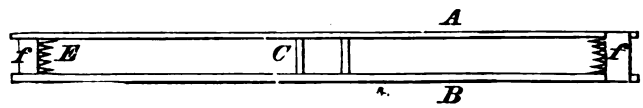

18565

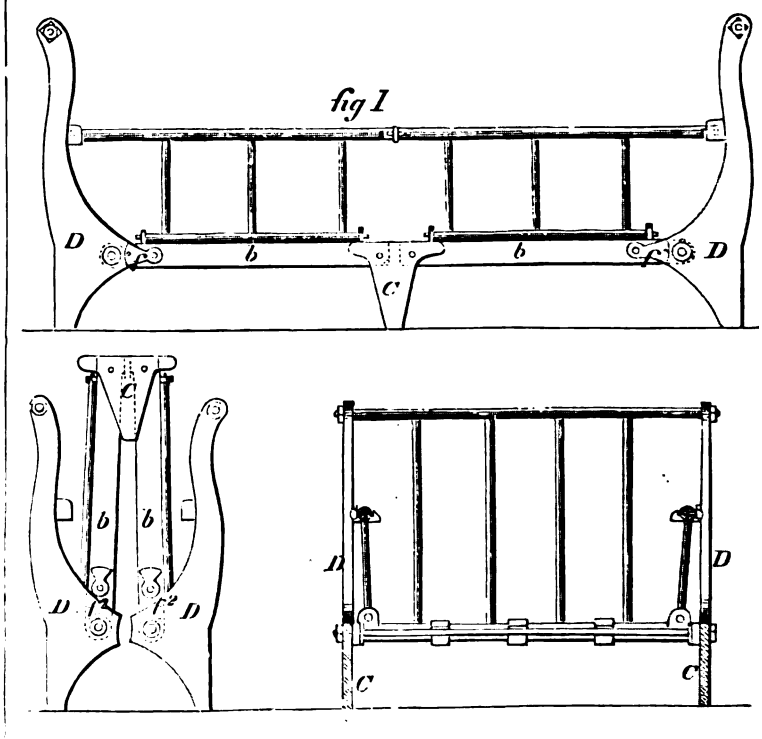

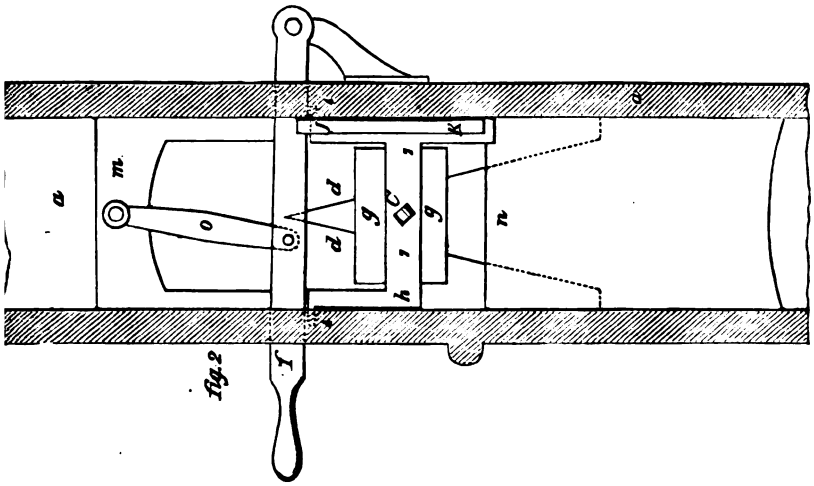

Fig. 2

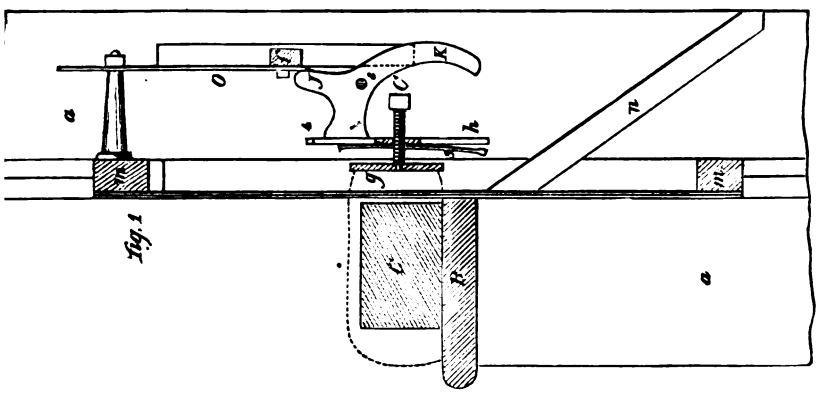

Fig. 1

17047

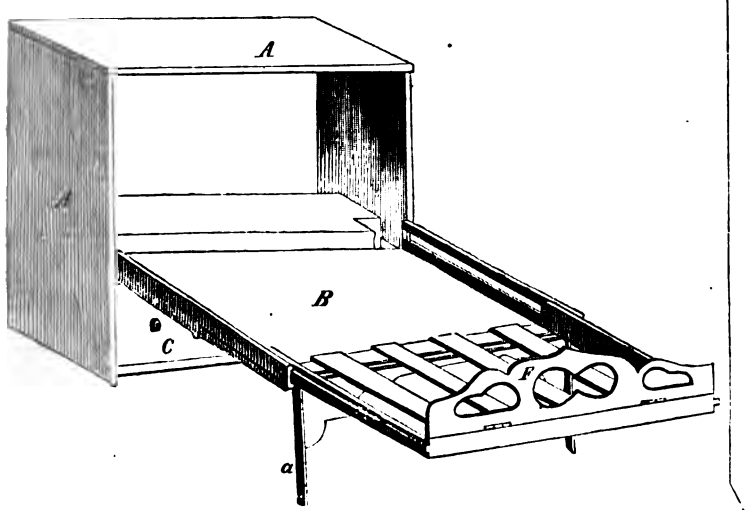

17890

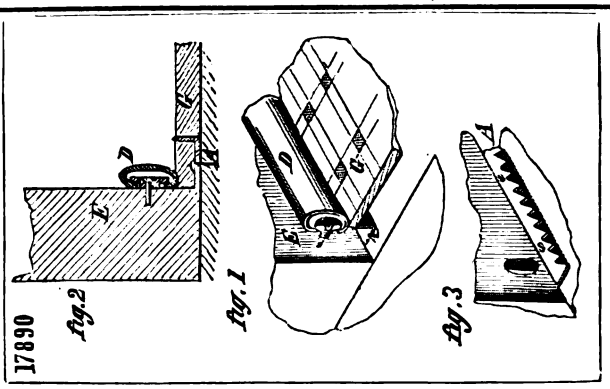

18631

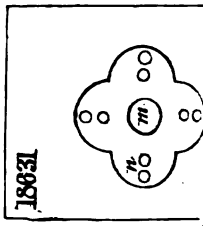

18968

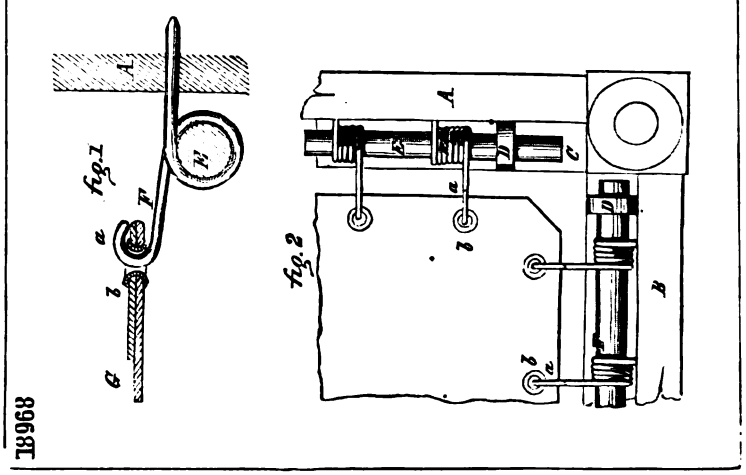

18770

fig.1

fig.2

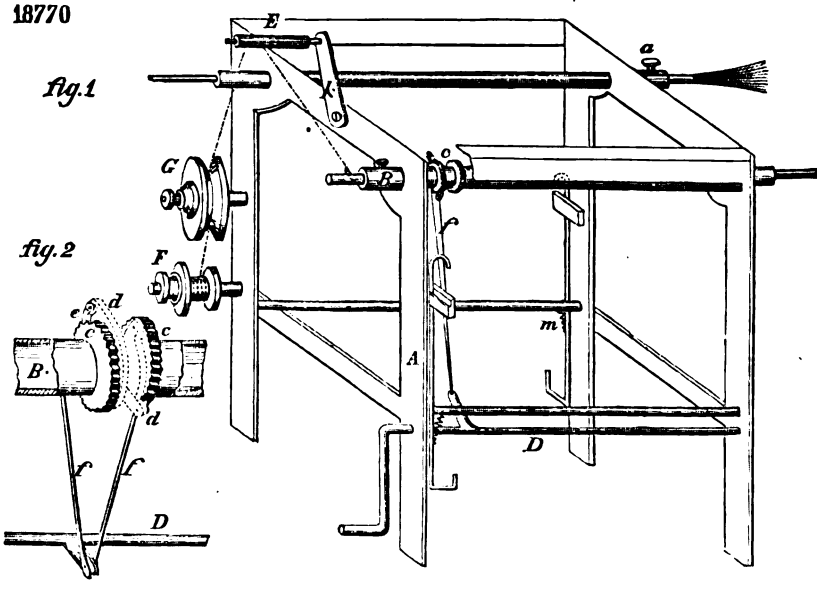

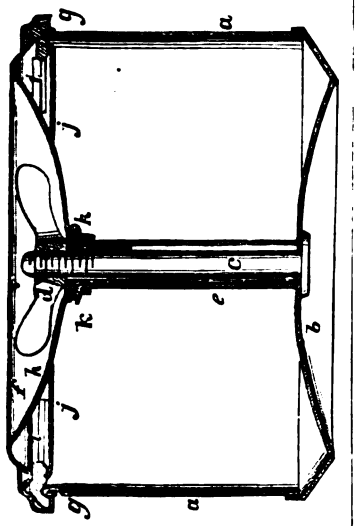
g
a
j
k
c
e
b
j
k
g
a

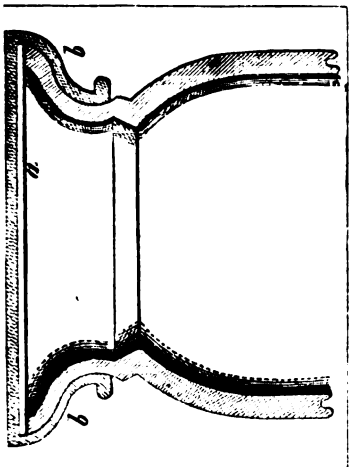
b
b

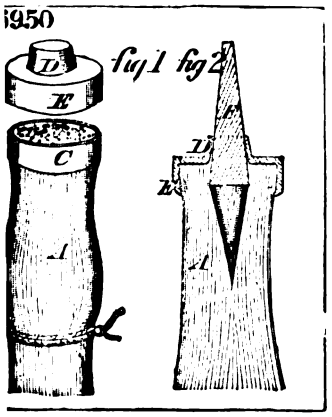
950
fig 1
fig 2
C

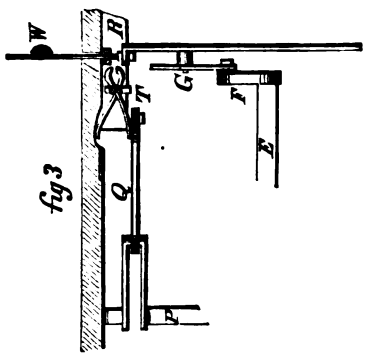
fig 3
W
R
T
G
F
E
Q
P

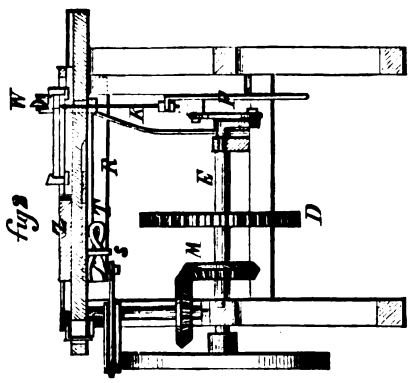
fig 2
W
A
R
E
D
M

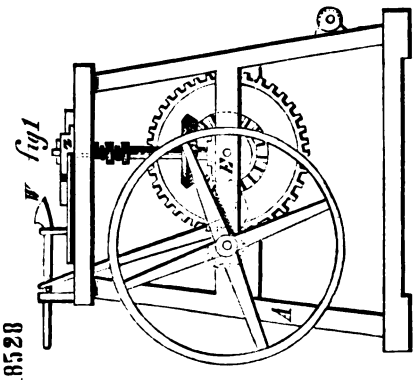
fig 1
A
18528

18740

fig. 1

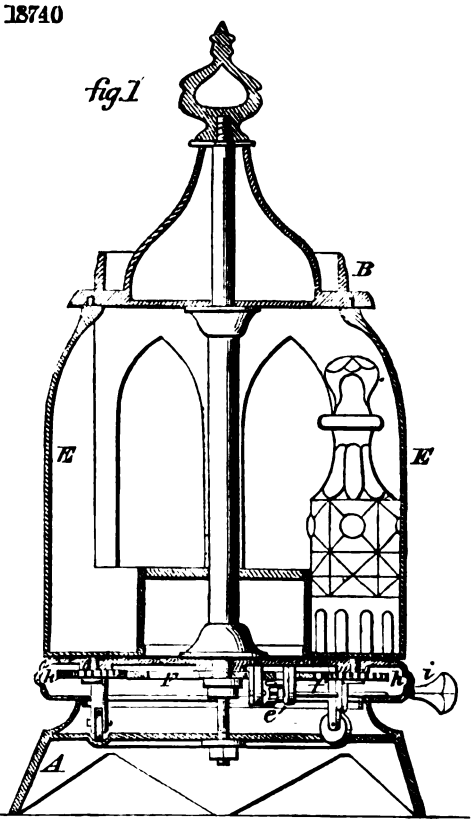

fig. 2

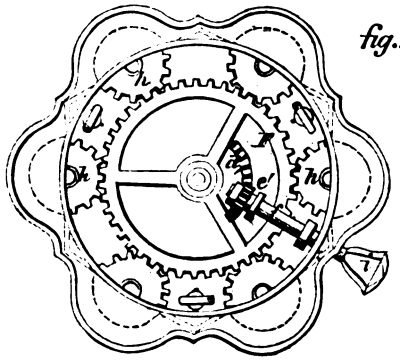

18647

fig. 1

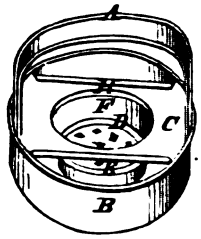

fig. 2

18839

fig. 1

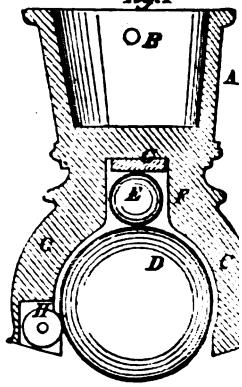

fig. 2

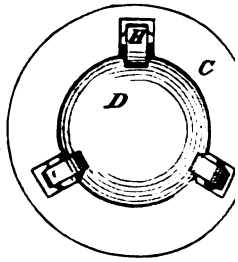

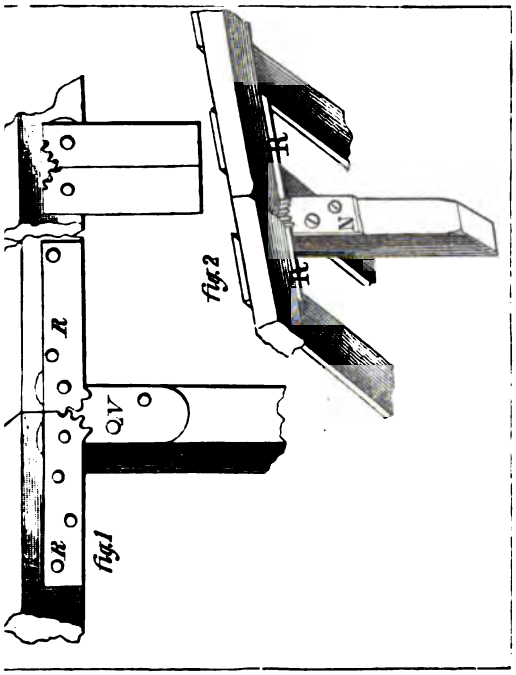

18466

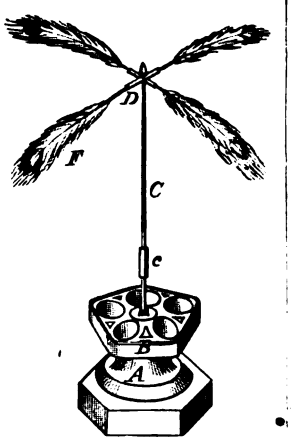

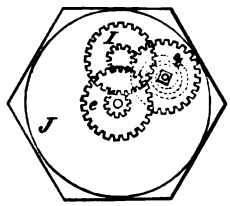

7631

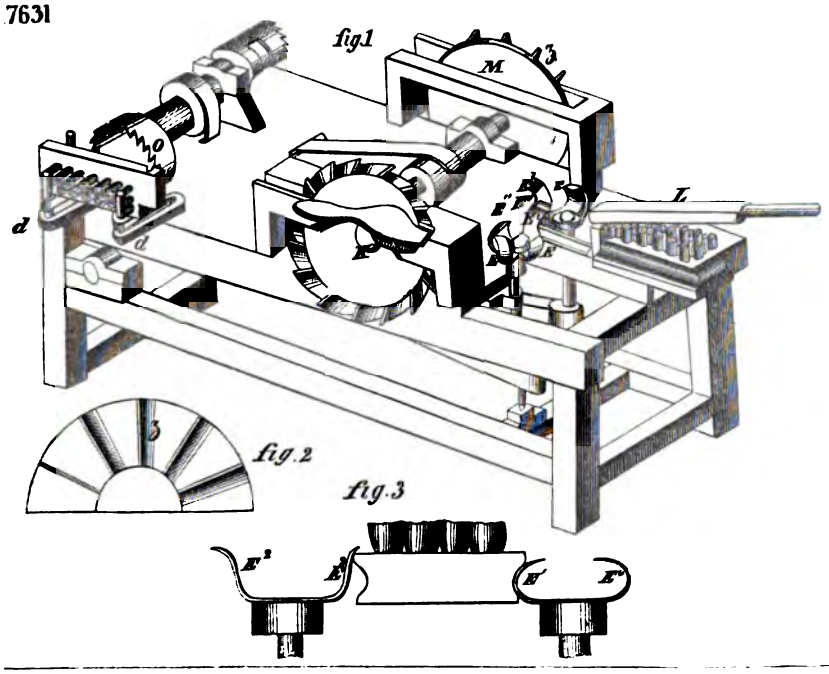

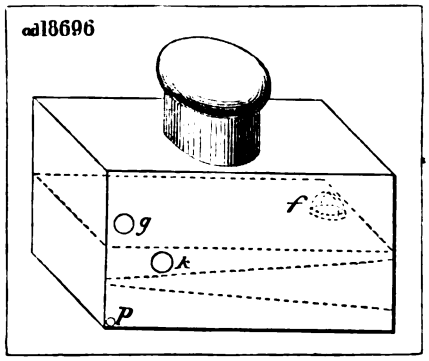
ad18696
f
g
k
p

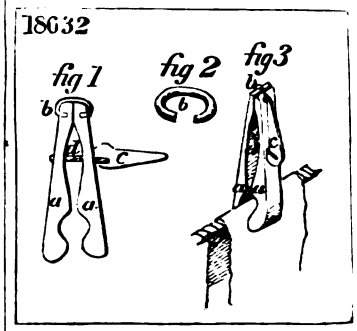
18632
fig 1
fig 2
fig 3
b
c
a

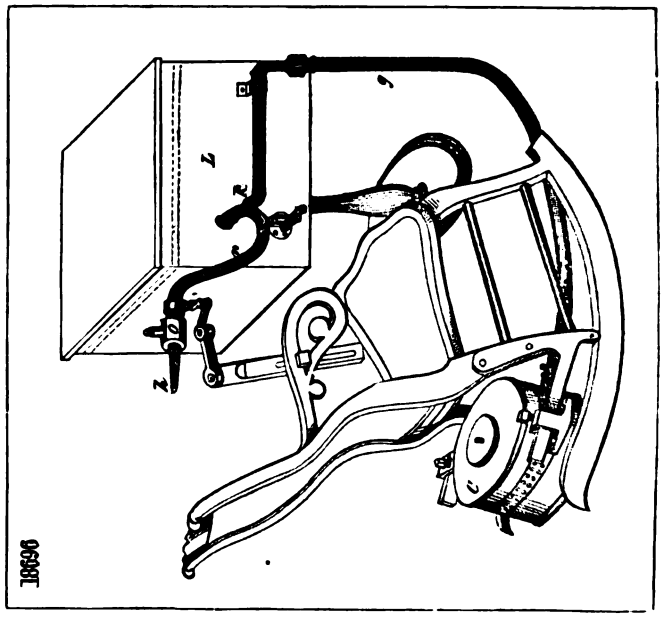
18696

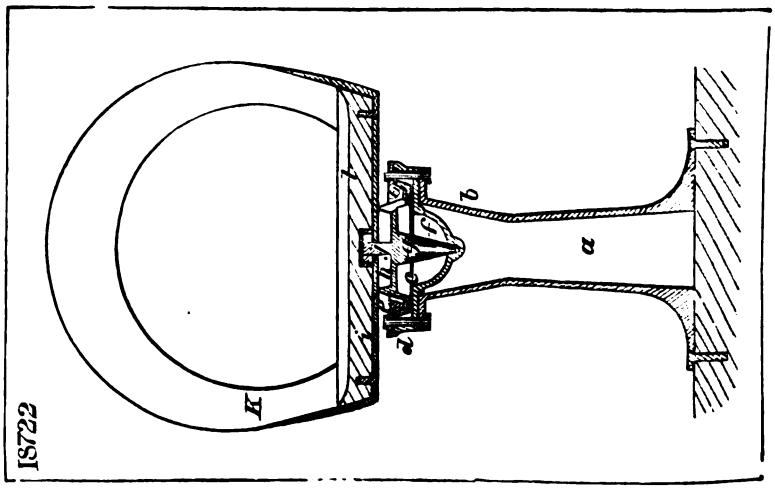
18722
a
b
K

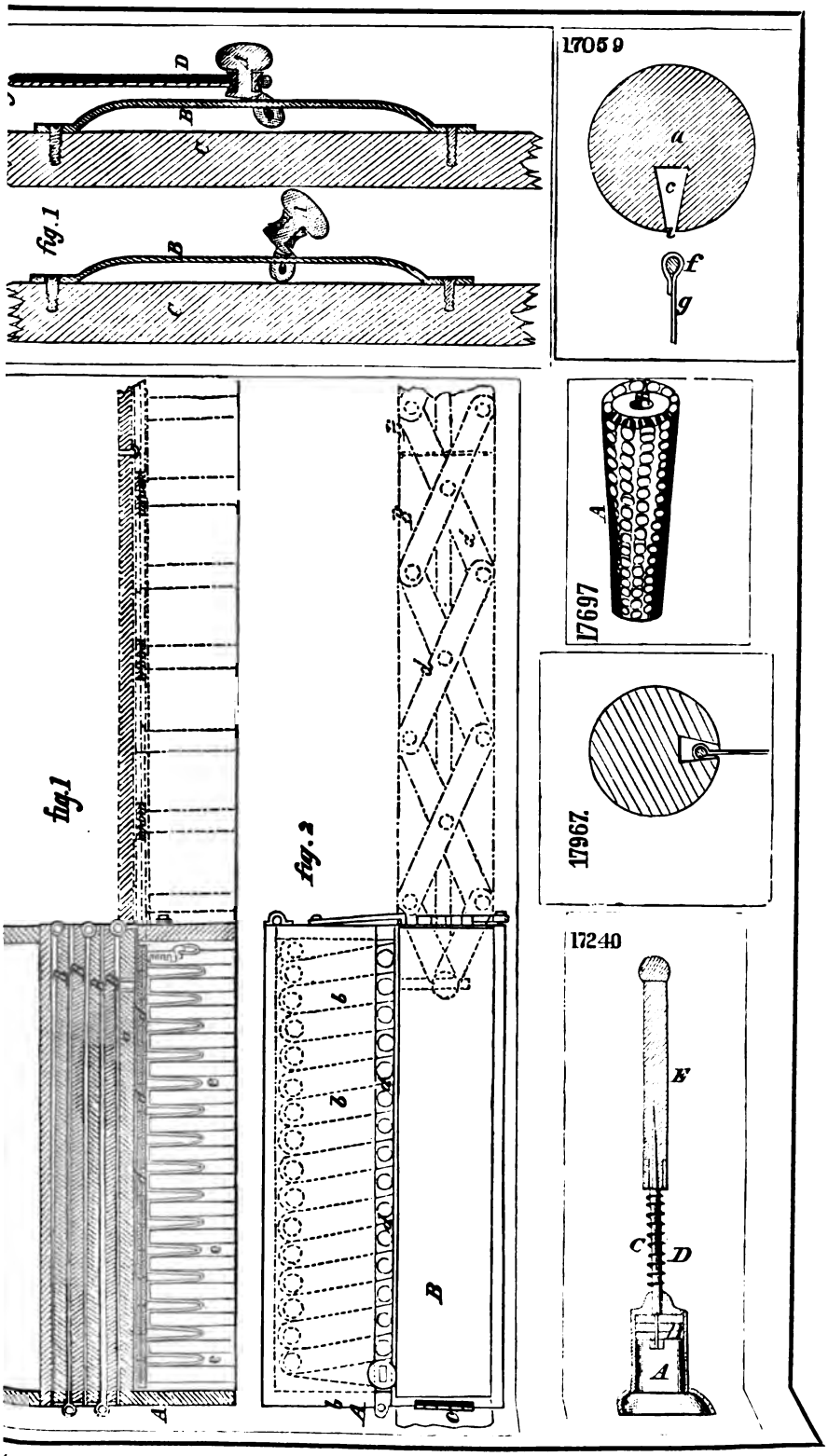
fig. 1
D
B
C
B
C
17059
a
c
f
g
fig. 1
fig. 2
17697
A
17967.
17240
E
C
D
A
B
A

18377

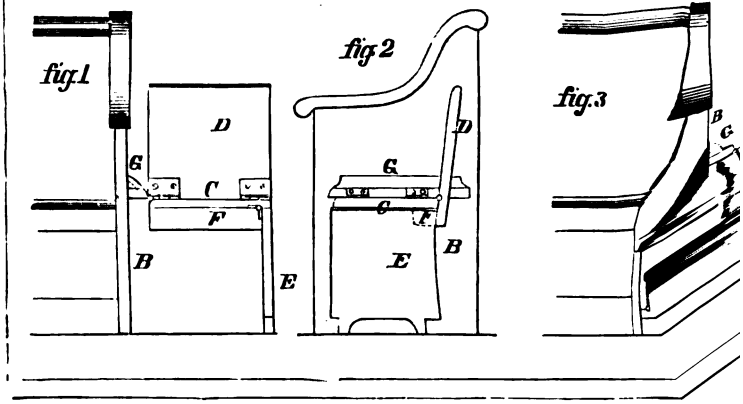

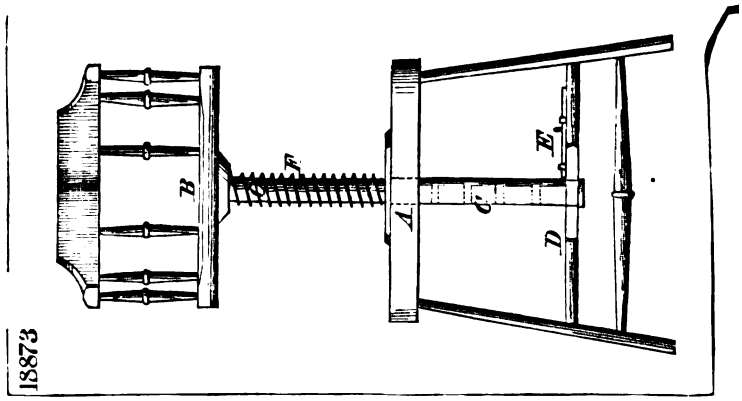

18873

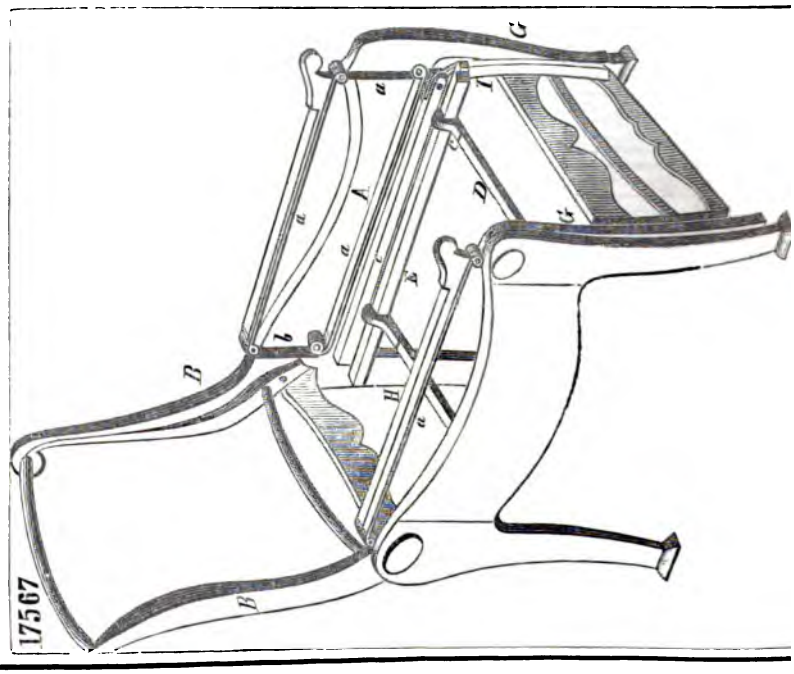

17567

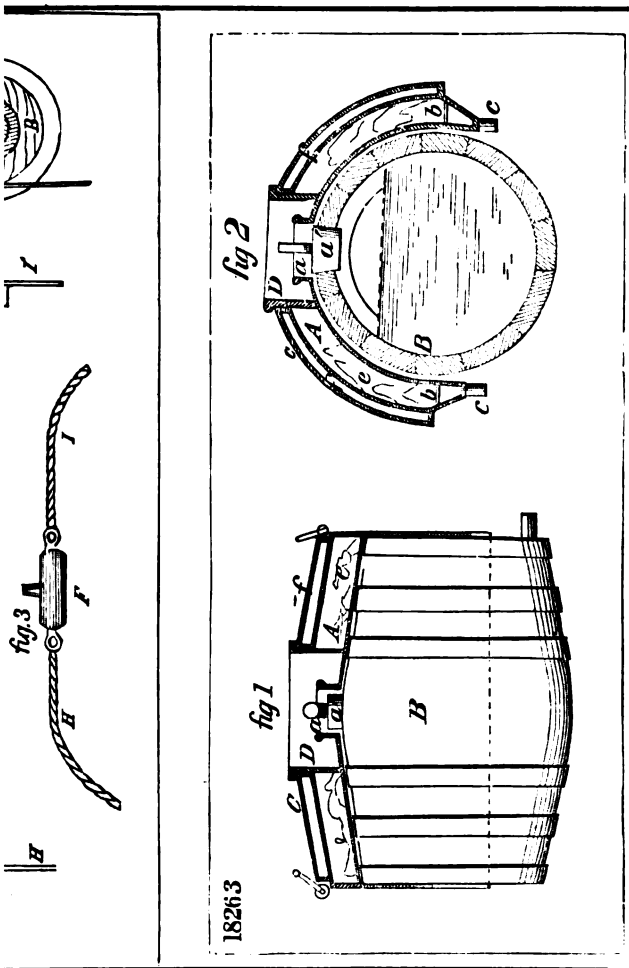

fig1

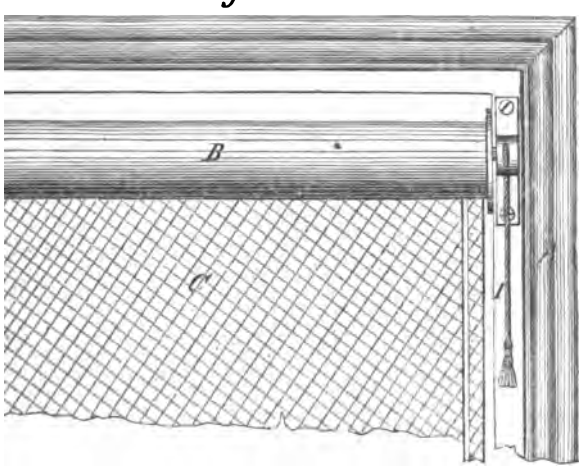

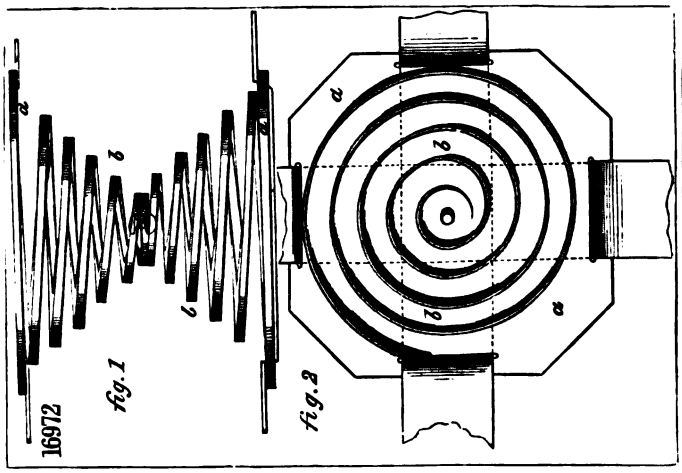
16972
fig. 1
fig. 2

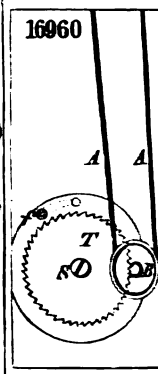
16960
A
A
T

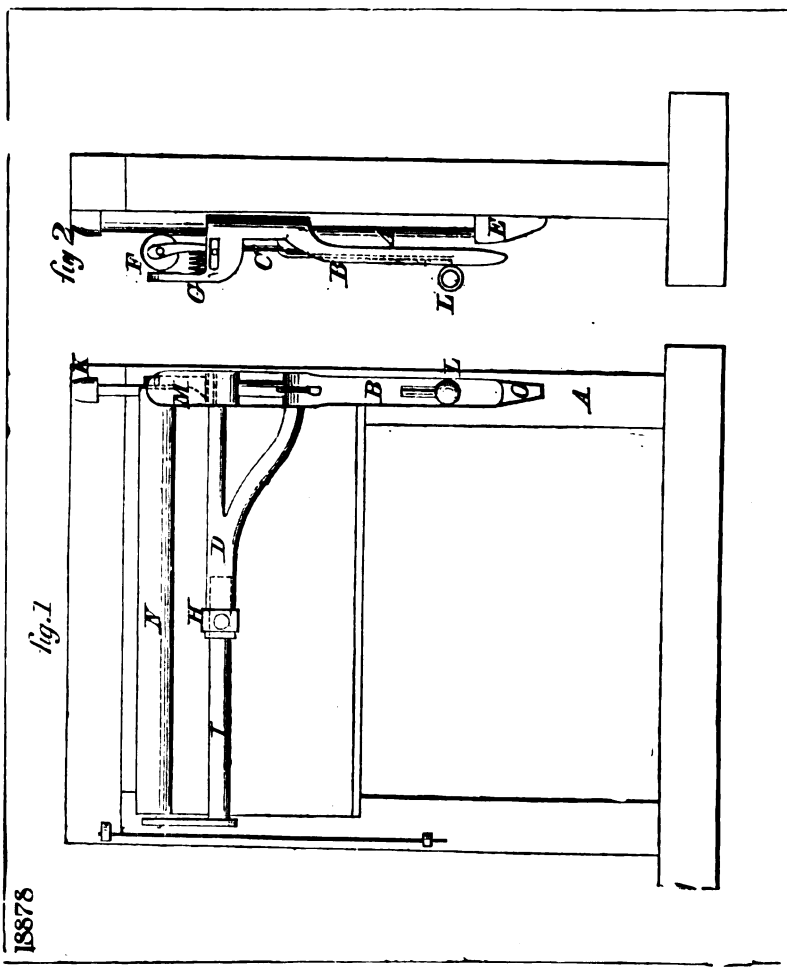
fig 2
fig. 1
18878

18710

fig 1

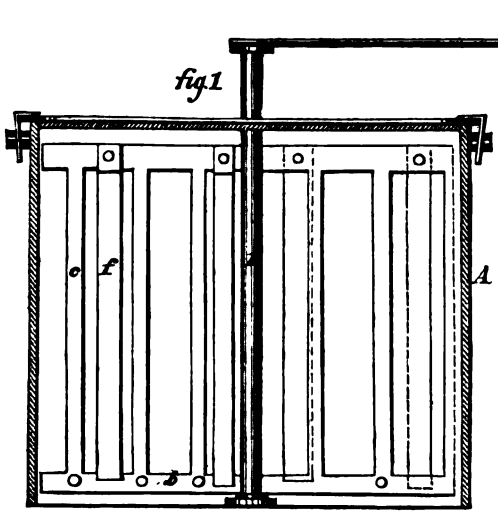

fig 3

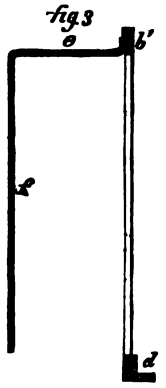

a 18710

fig 2

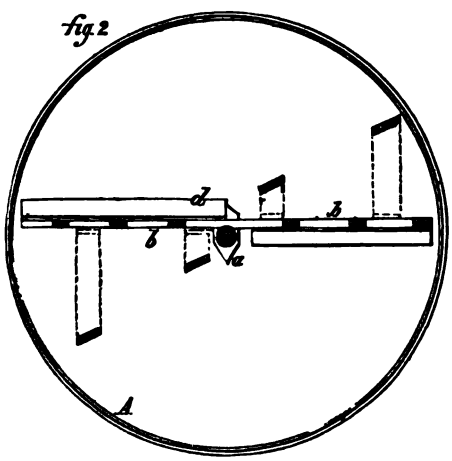

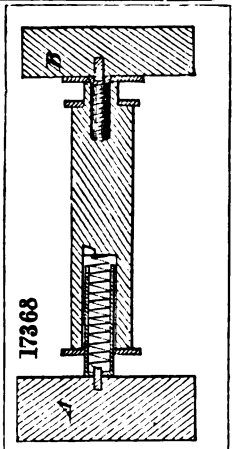

17911

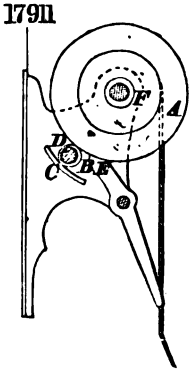

18523

fig 1

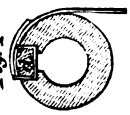

fig 2

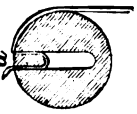

fig 3

fig 4

17006

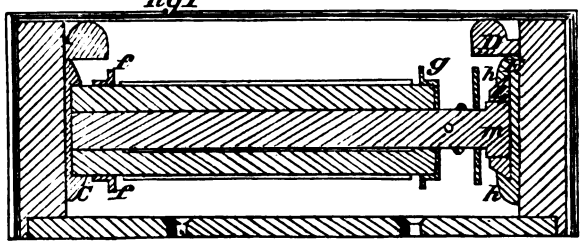

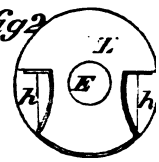

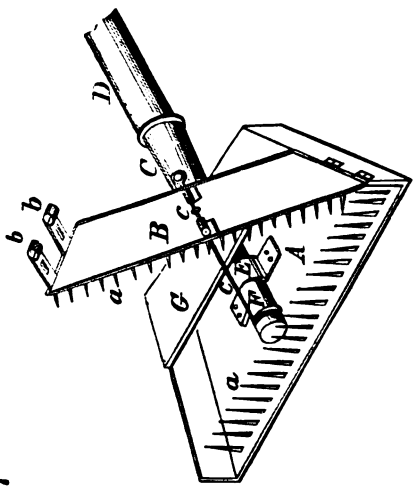

16877

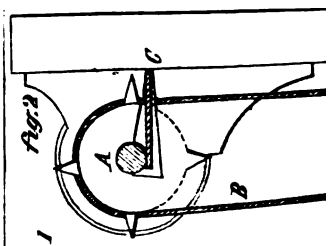

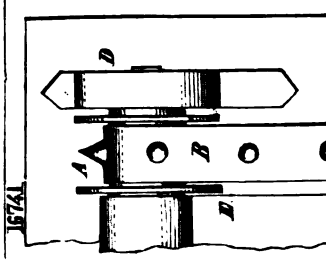

16741

17008

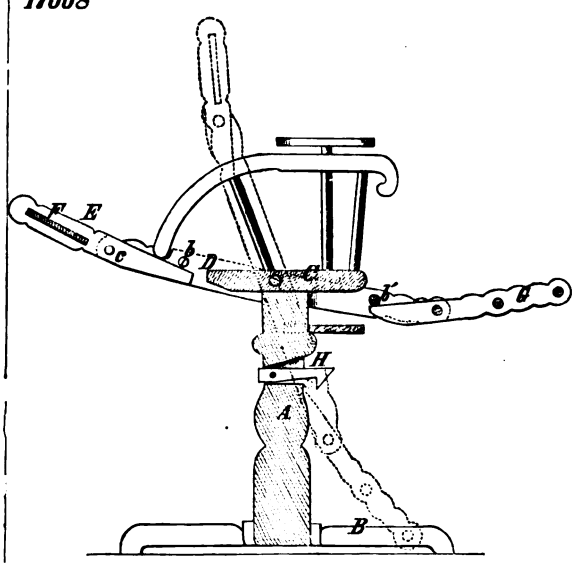

18422

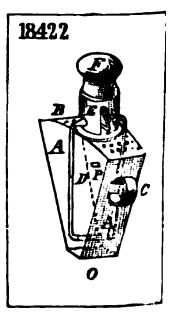

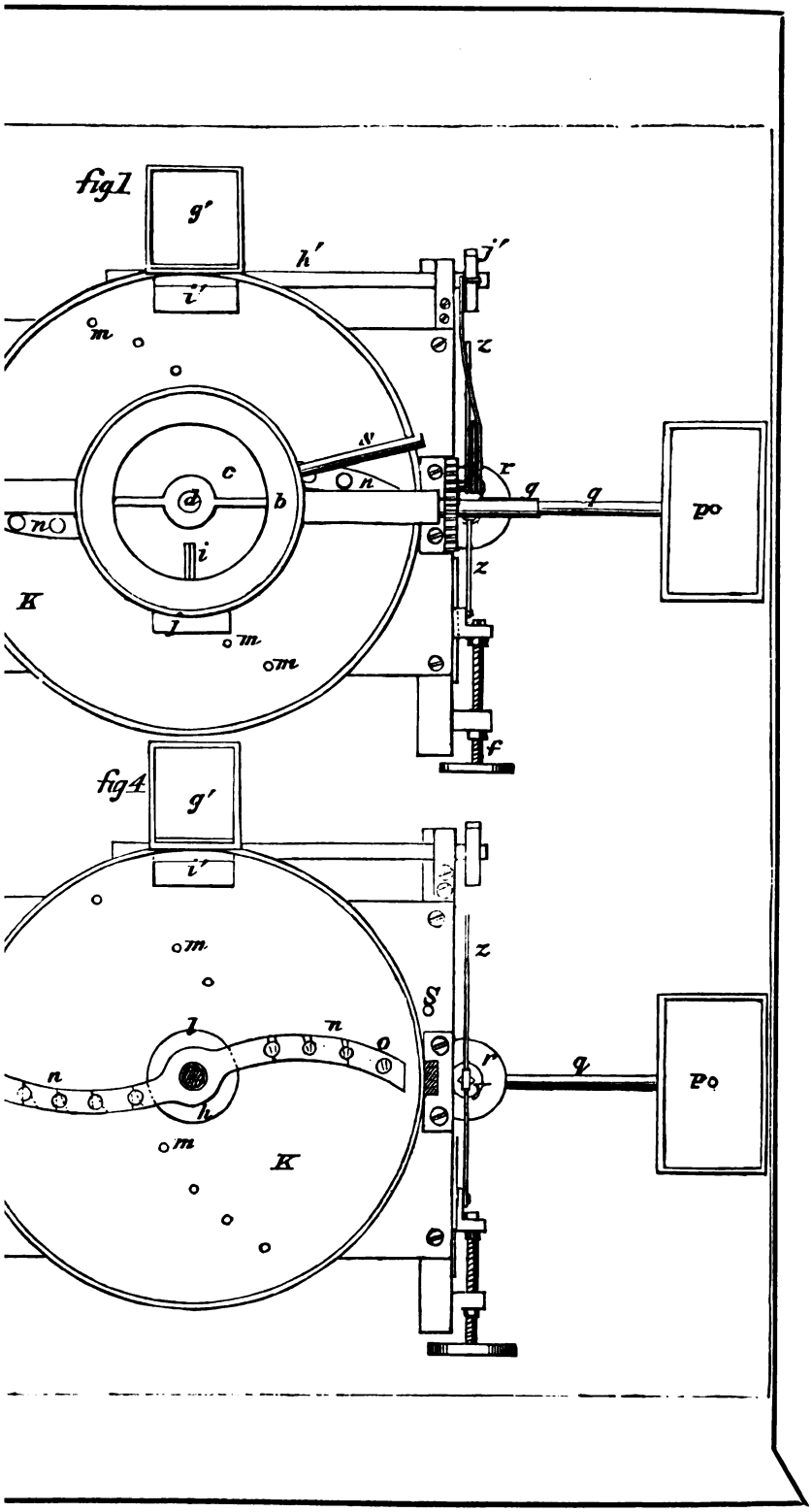
fig1
g'
h'
i'
j'
m
z
s
c
d
b
n
r
q
q
p
i
K
j
m
m
z
f
fig4
g'
i'
m
z
S
l
n
o
n
h
r
q
p
m
K

18949

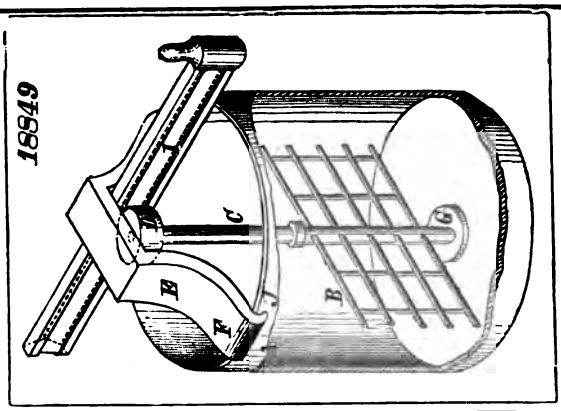

18723ad

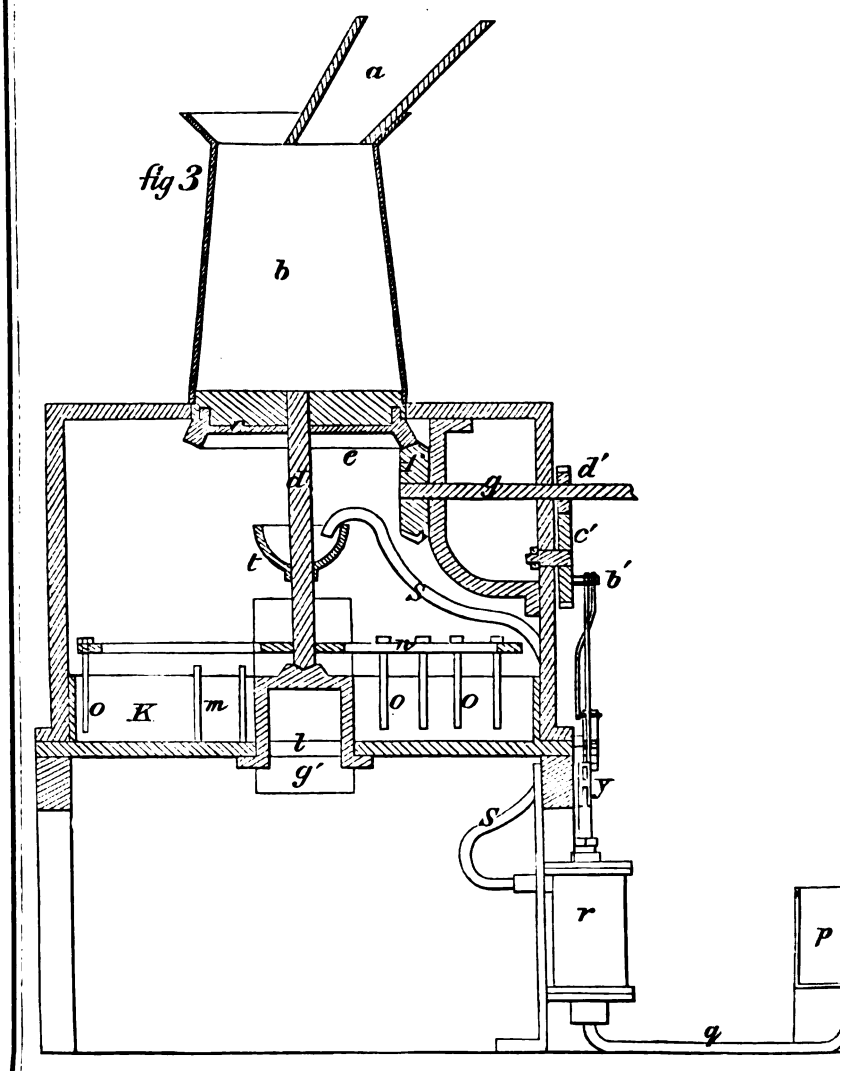

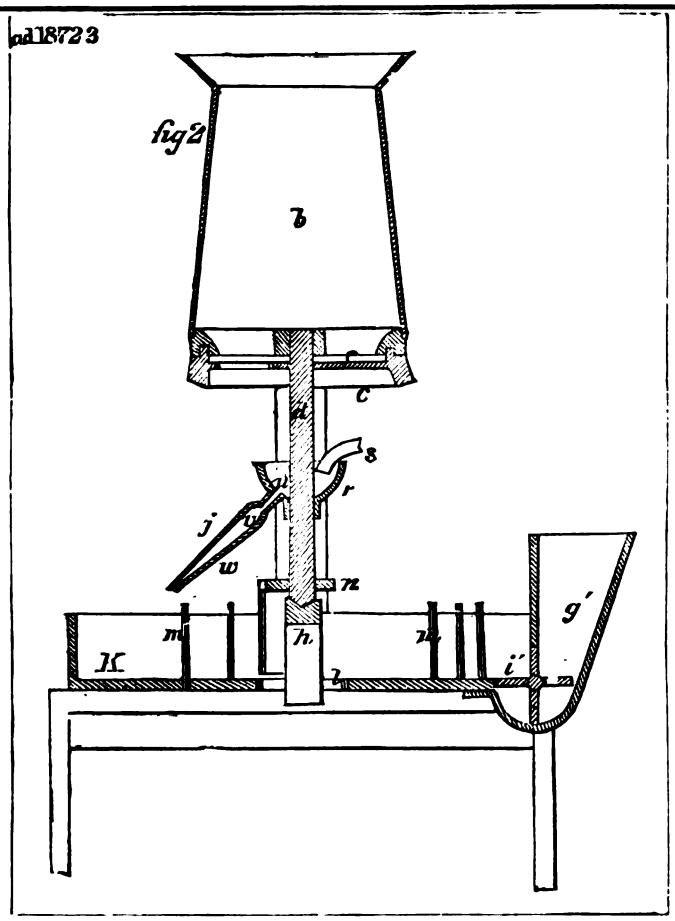
ad 18723
fig 2
b
c
d
s
r
j
w
n
g'
m
h
K
i'
l

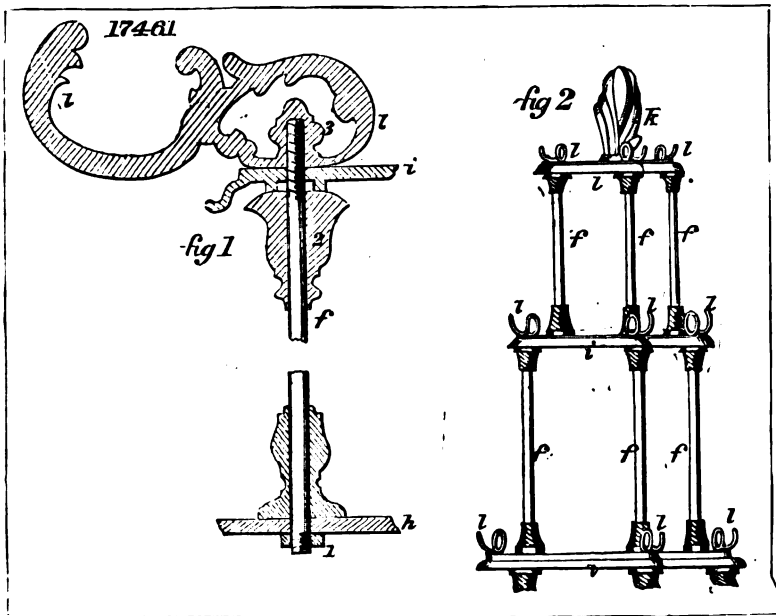
17461
l
3
i
fig 1
2
f
h
1
fig 2
k
l
f
i

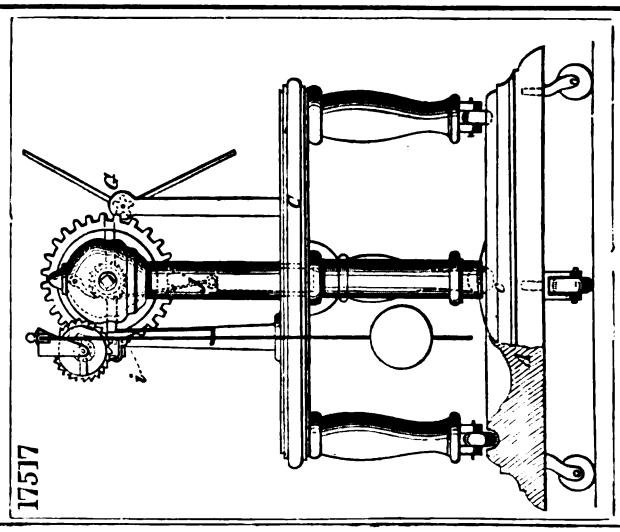
17517

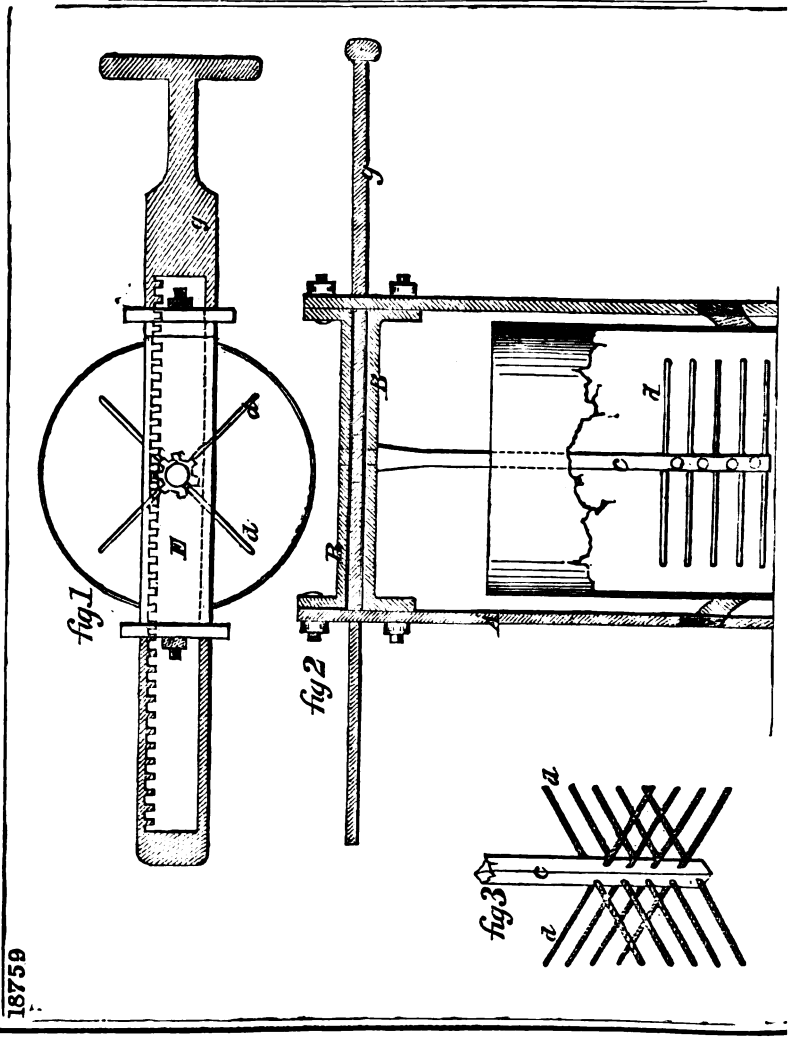
18759
Fig 1
Fig 2
Fig 3

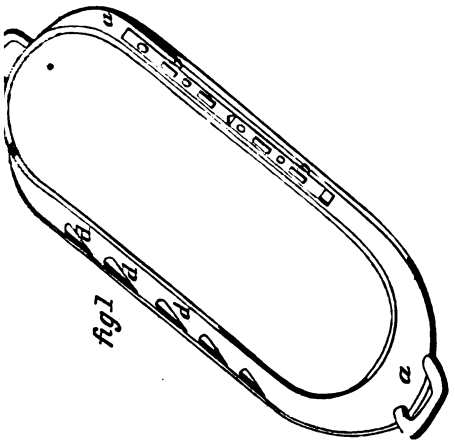
fig.1
a
a
a
a

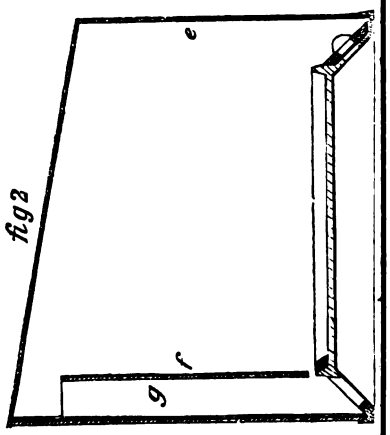
fig.2
e
g
f

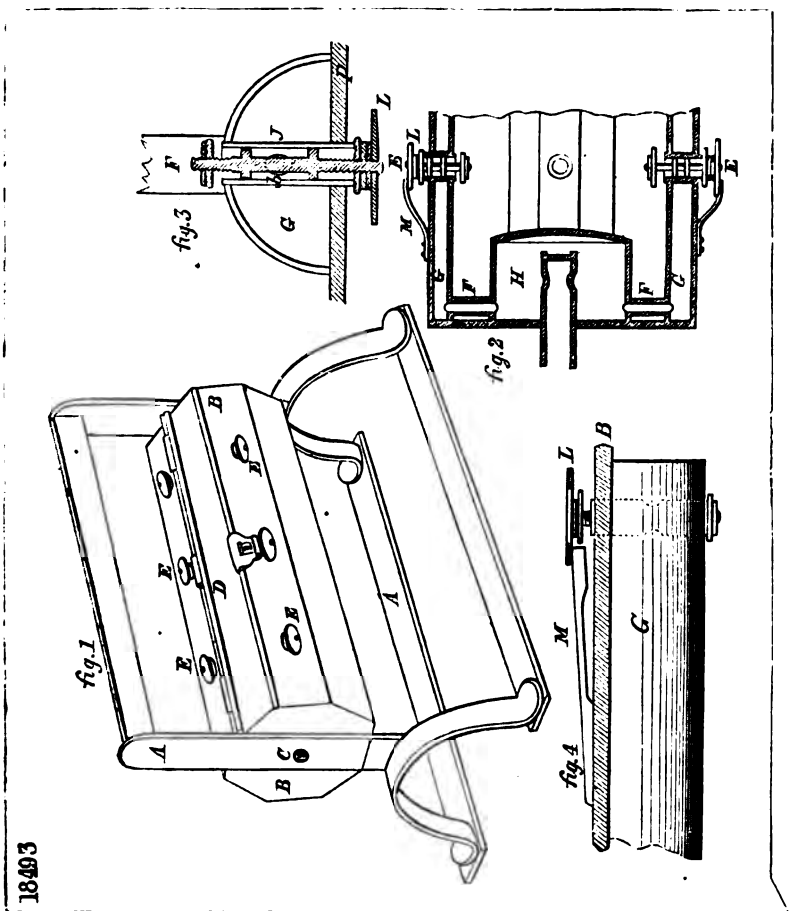
fig.1
fig.2
fig.3
fig.4
A
B
C
D
E
F
G
H
J
K
L
M
18493

18758

fig.2

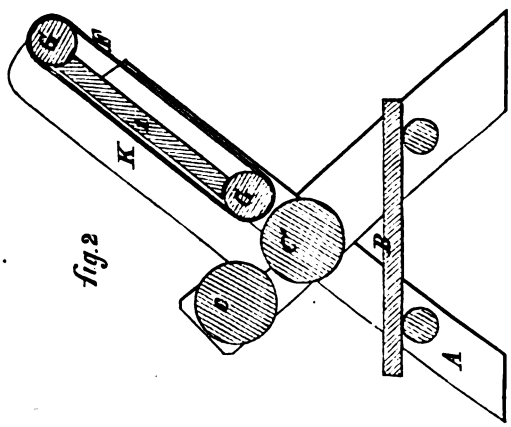

fig.1

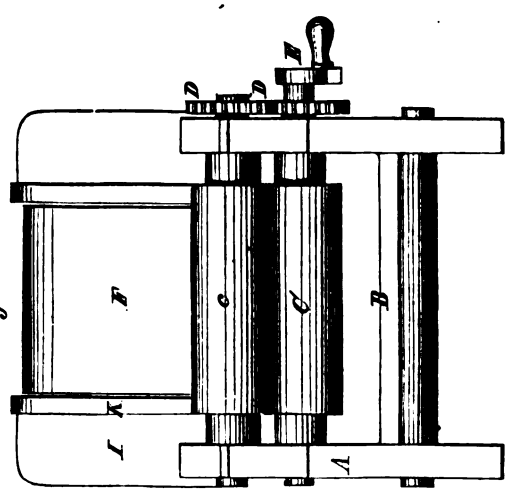

17048

fig.1

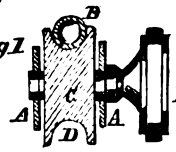

fig.2

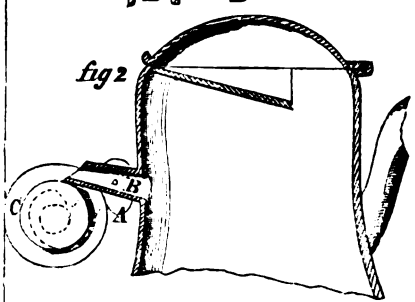

18498

fig.1

fig.2

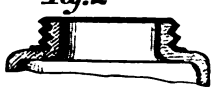

17470

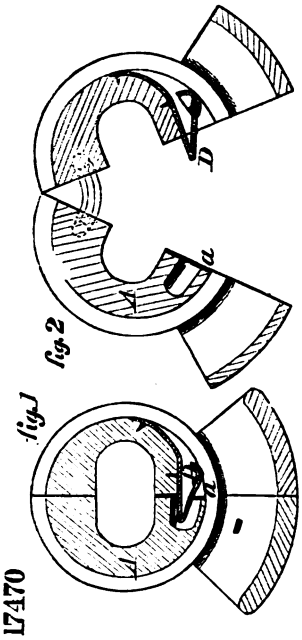

18543

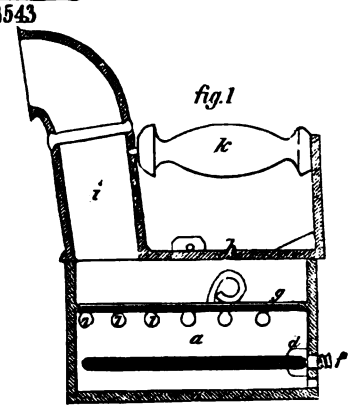

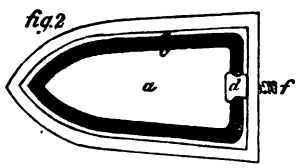

85

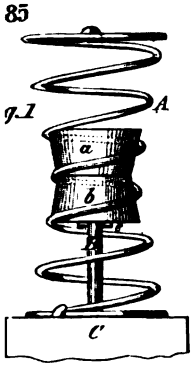

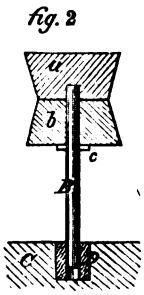

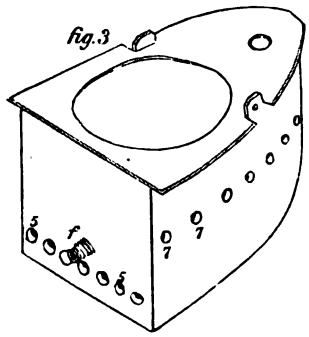

17527

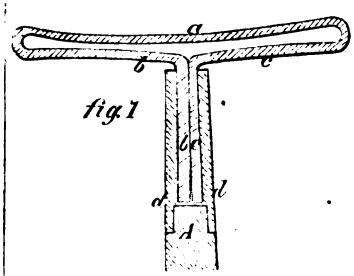

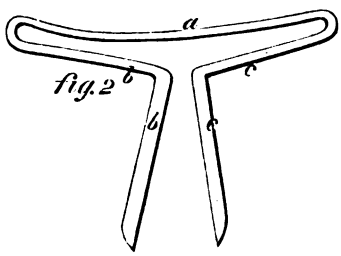

17877

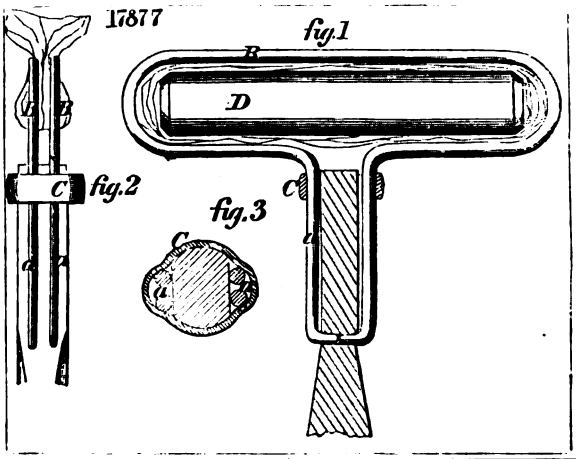

18645

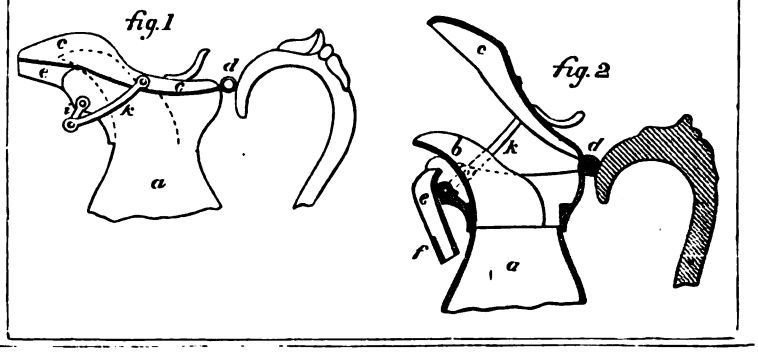

18108

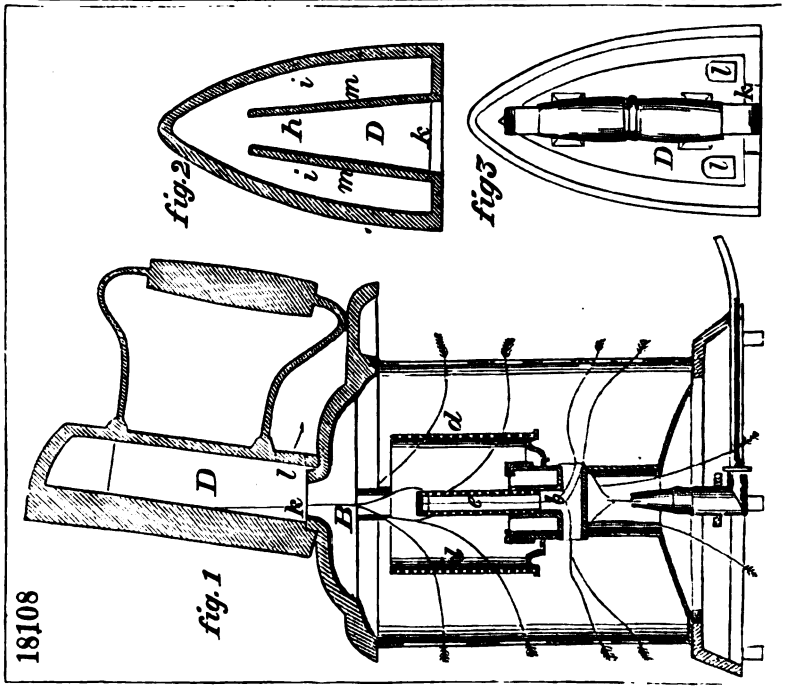

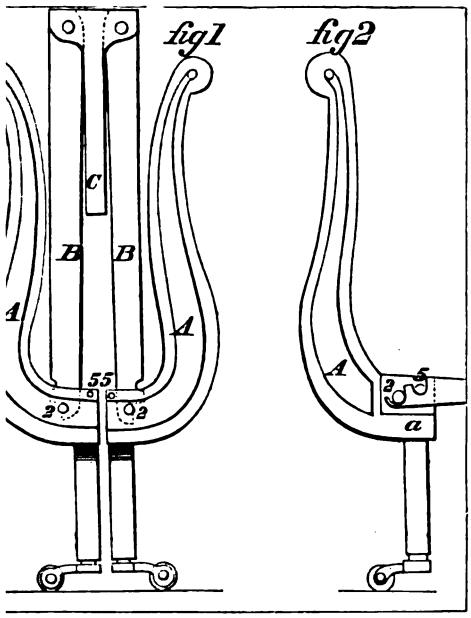
fig1
fig2
C
B
B
A
A
55
2
2
A
2
5
a

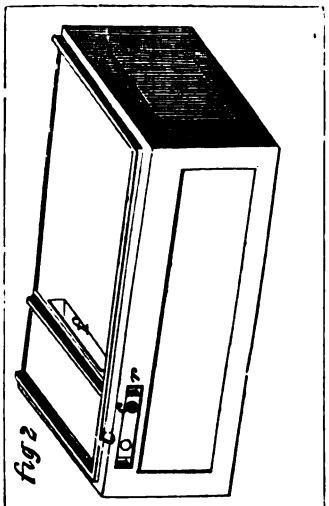
fig 2

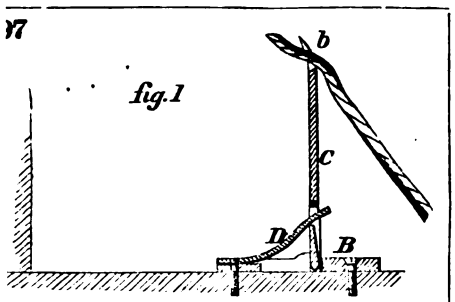
fig.1
b
C
D
B

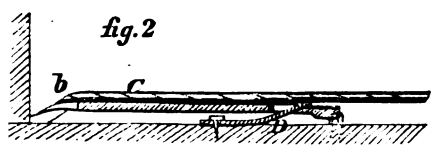
fig.2
b
C

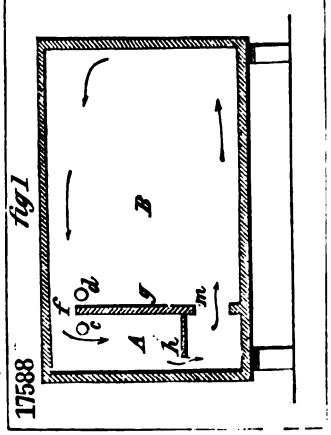
fig1
B
17588

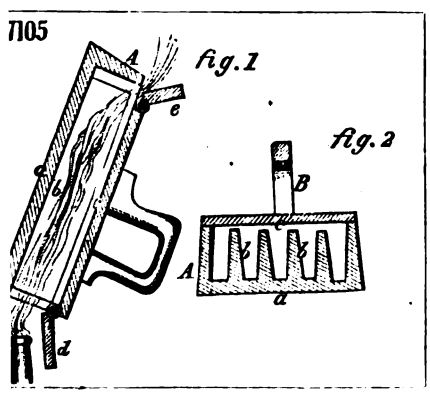
fig.1
fig.2
A
e
B
A
a
d

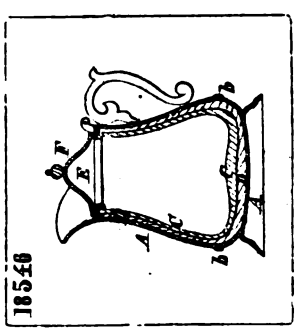
18548
b
A
b

18180

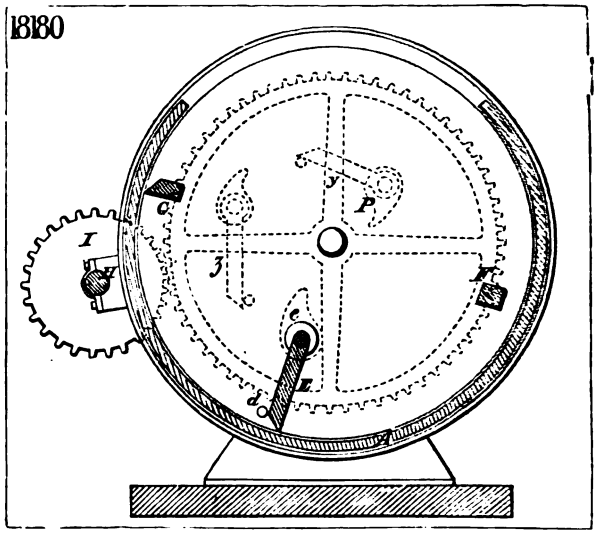

17980

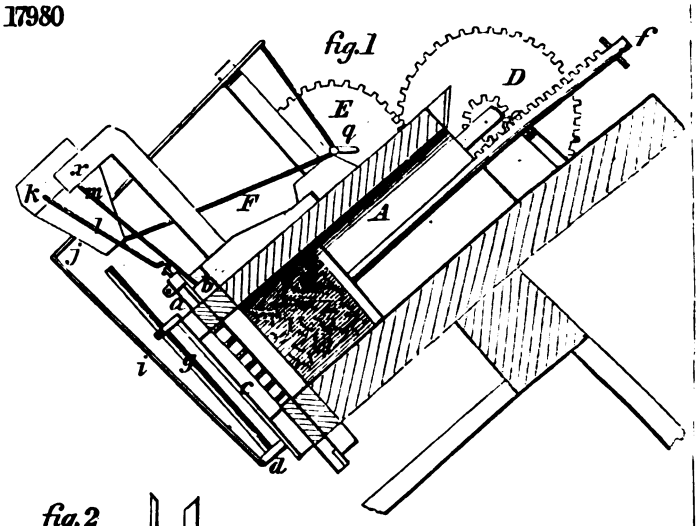

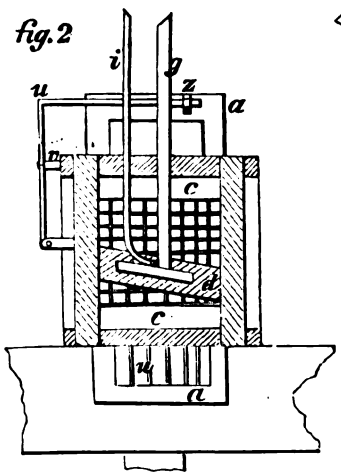

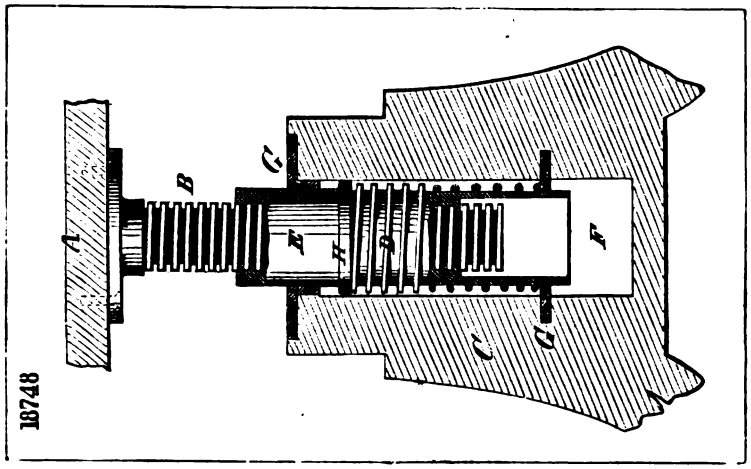

18778

fig.1

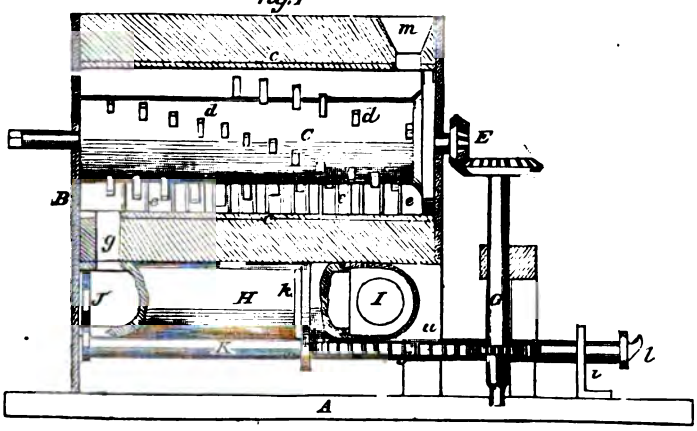

fig.2

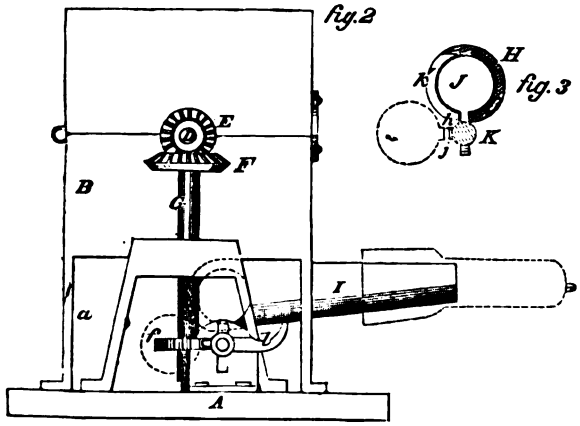

fig.3

16887

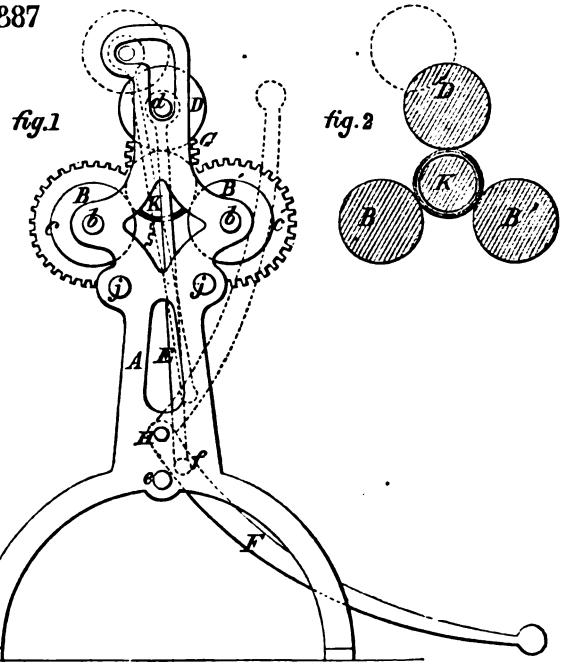

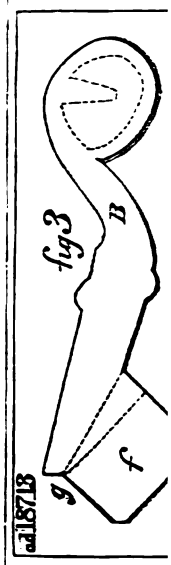

17785

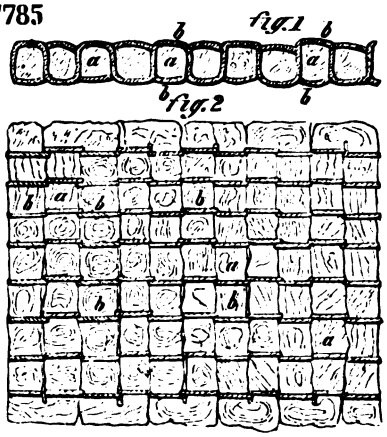

18517

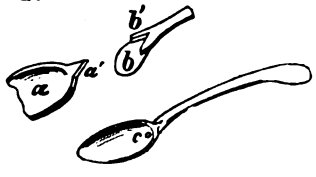

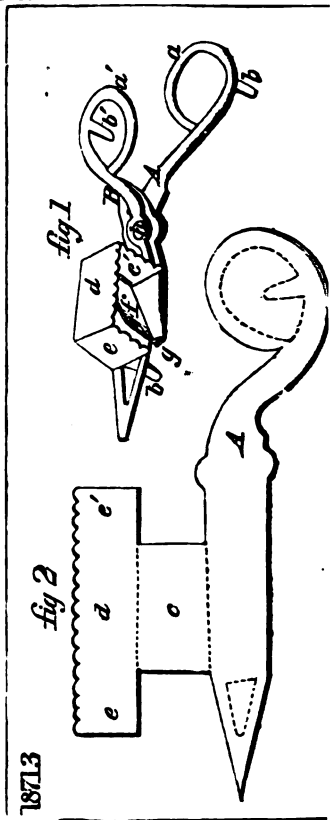

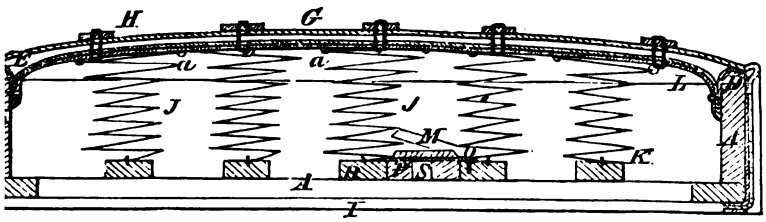

18042

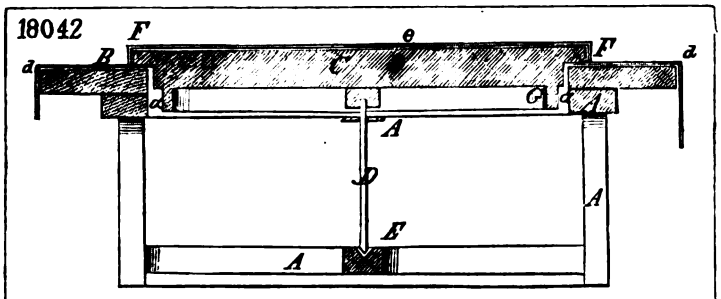

3636

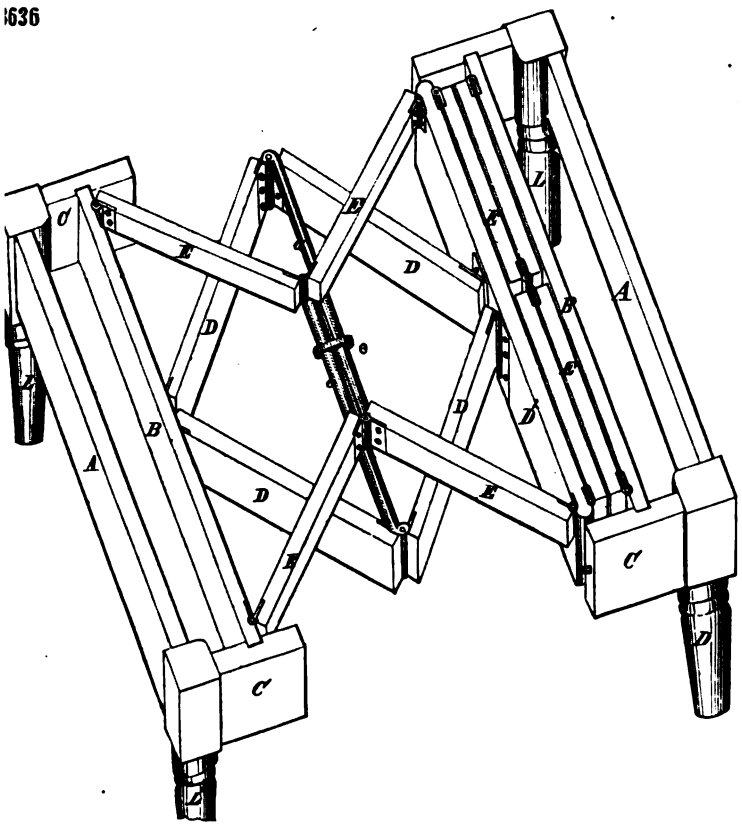

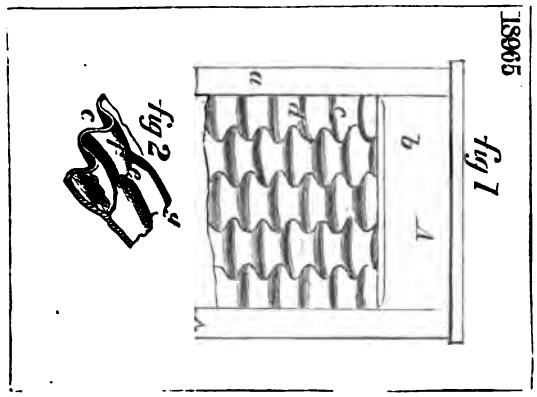
18965
fig 1
fig 2

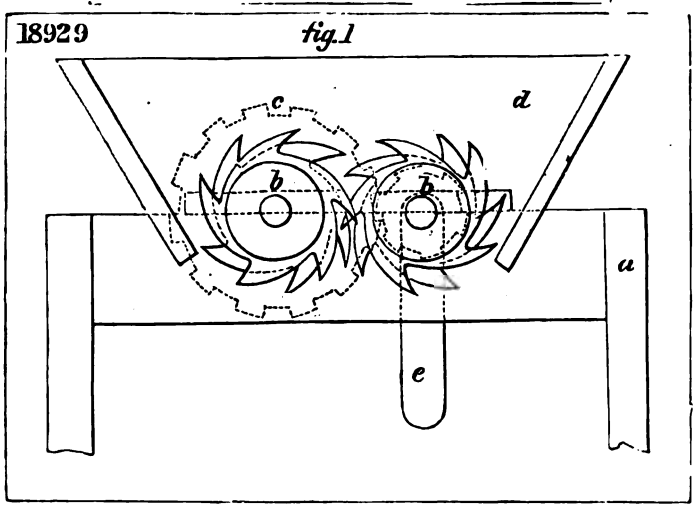
18929
fig.1
c
d
b
b
a
e

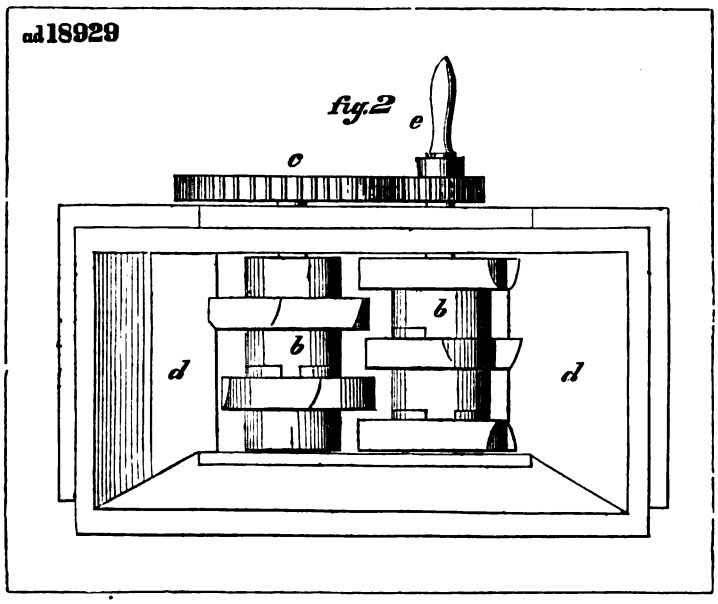
ad 18929
fig.2
e
c
b
b
d
d

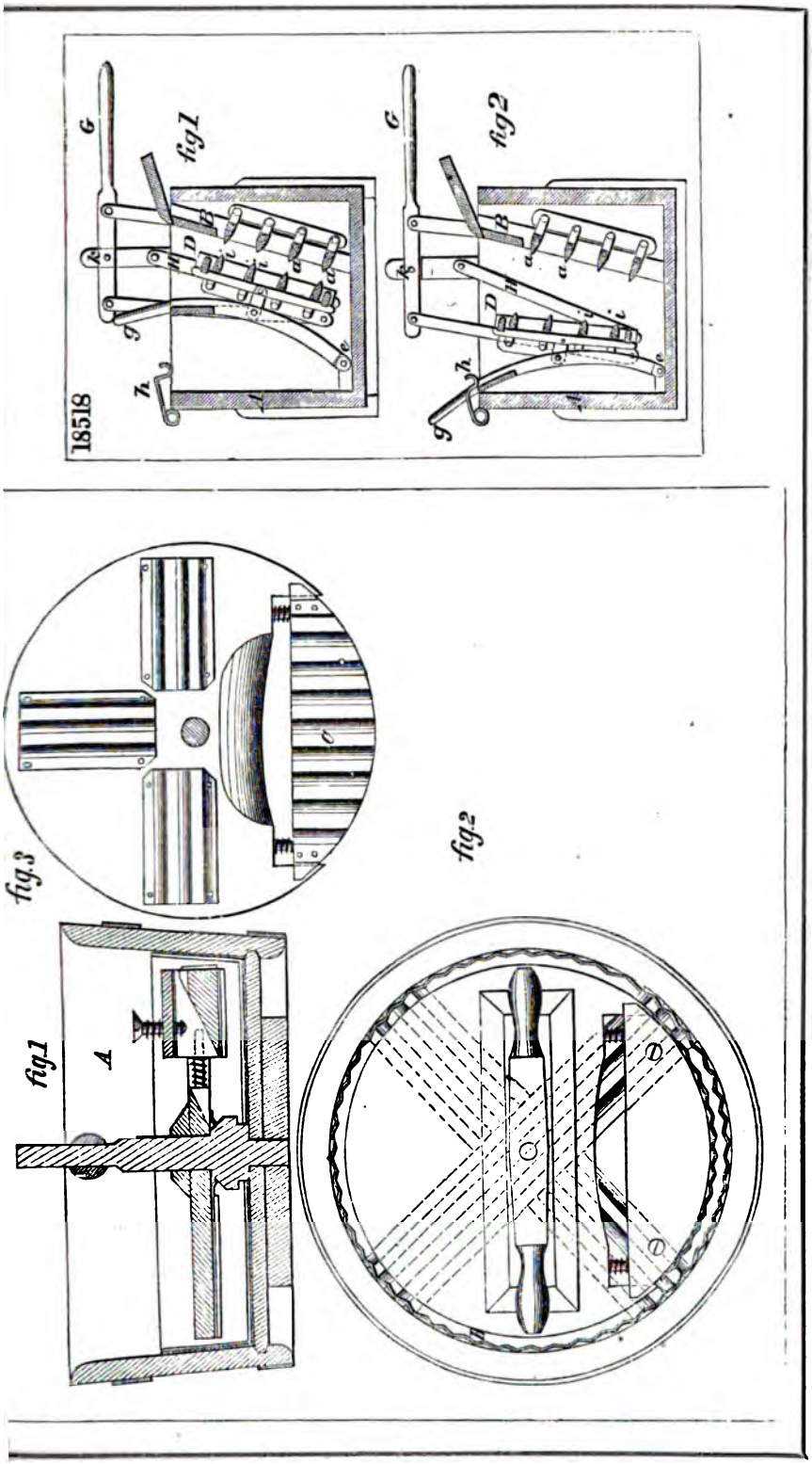
18518
fig.1
fig.2
fig.3
fig.1
fig.2

18489

fig 1

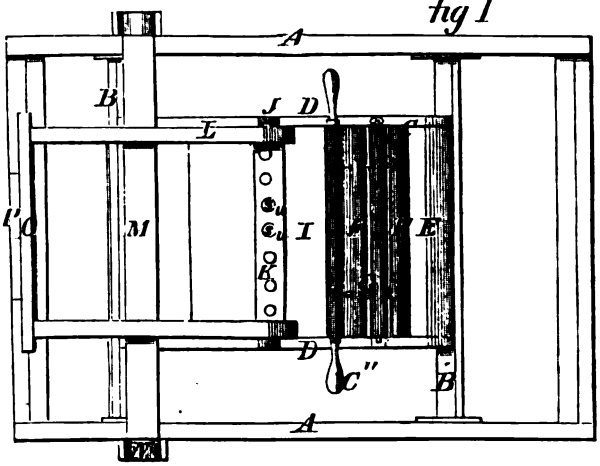

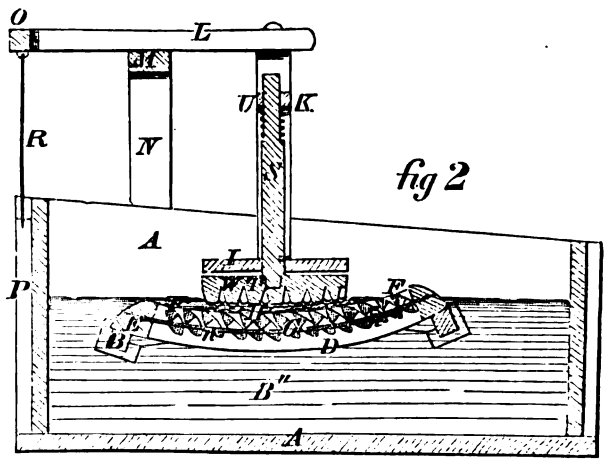

fig 2

18621

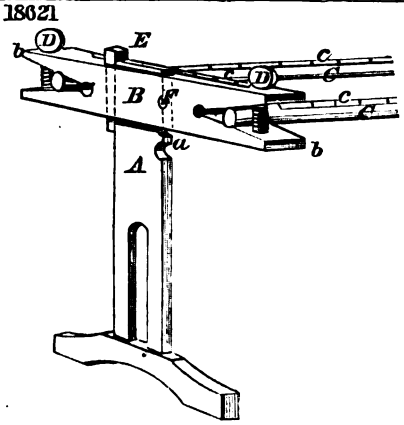

16567

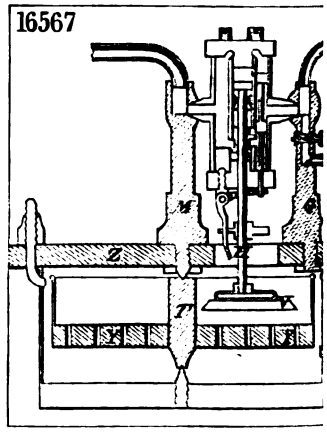

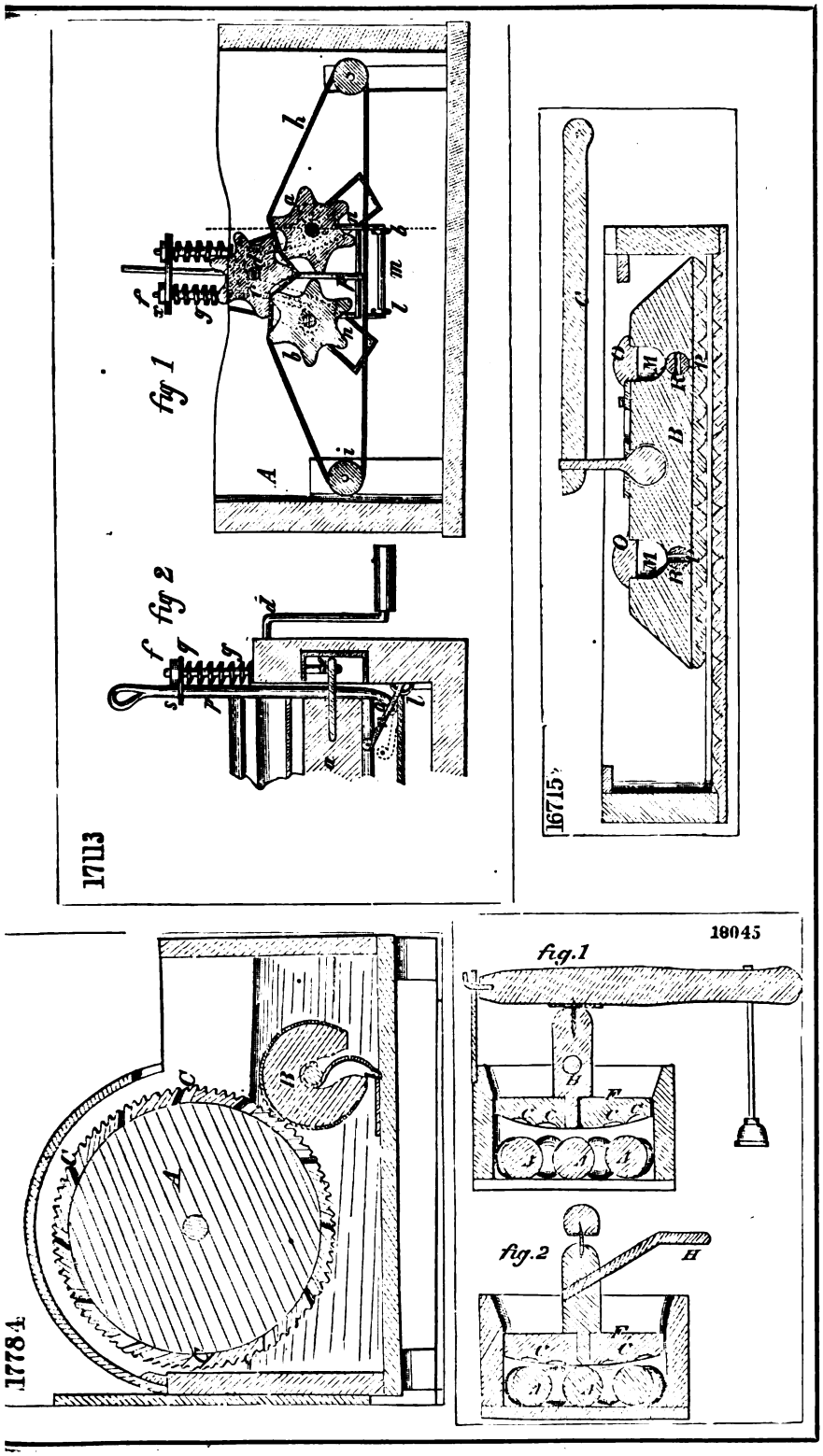
fig 1
fig 2
1713
16715
1784
18045
fig.1
fig.2

18773.

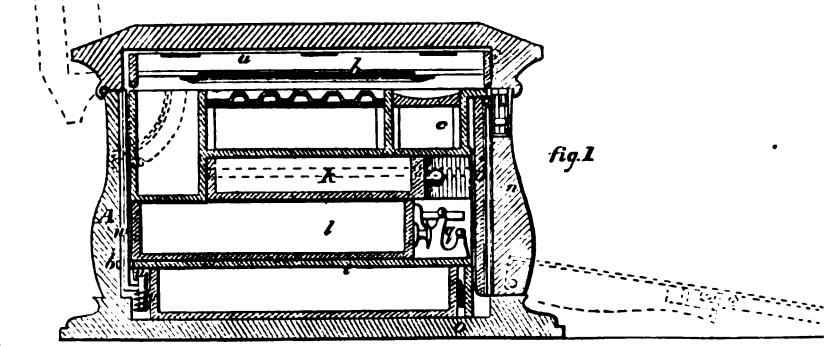

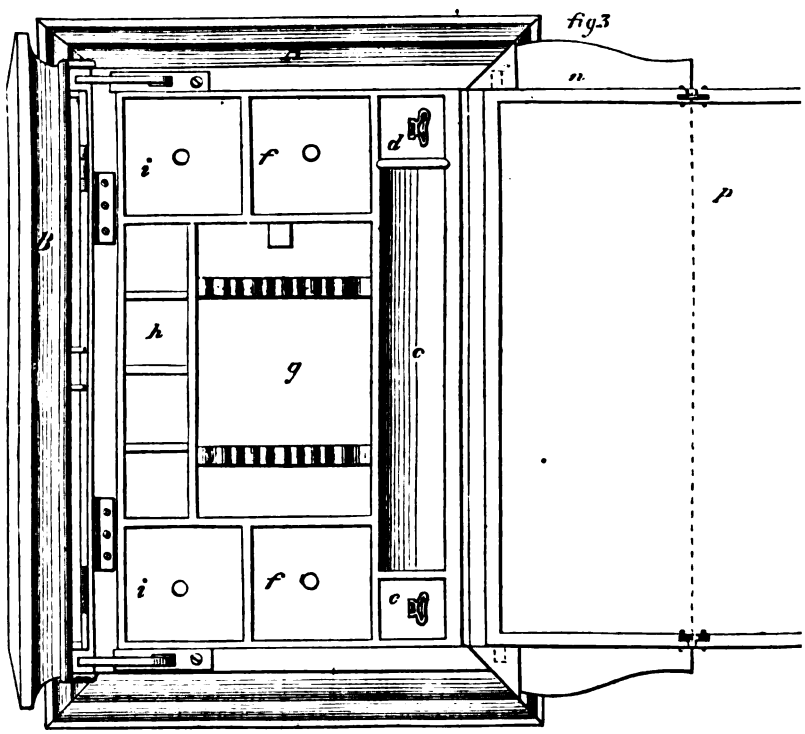

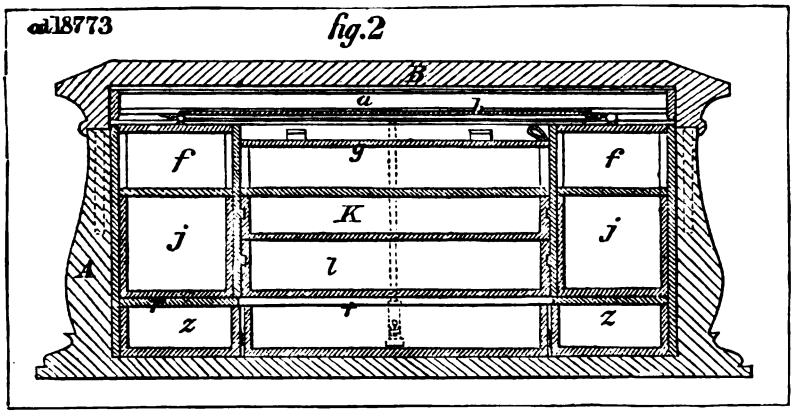
ad 18773
fig. 2
B
a
f
g
f
K
j
j
l
A
z
z

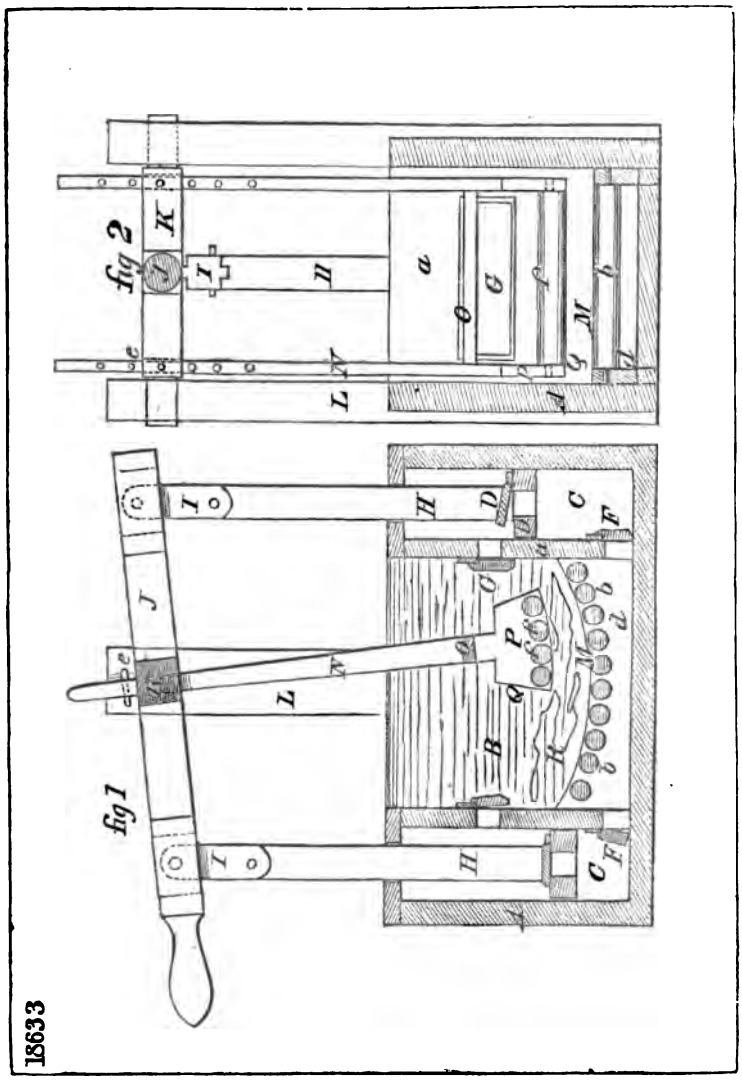
fig 2
fig 1
18633

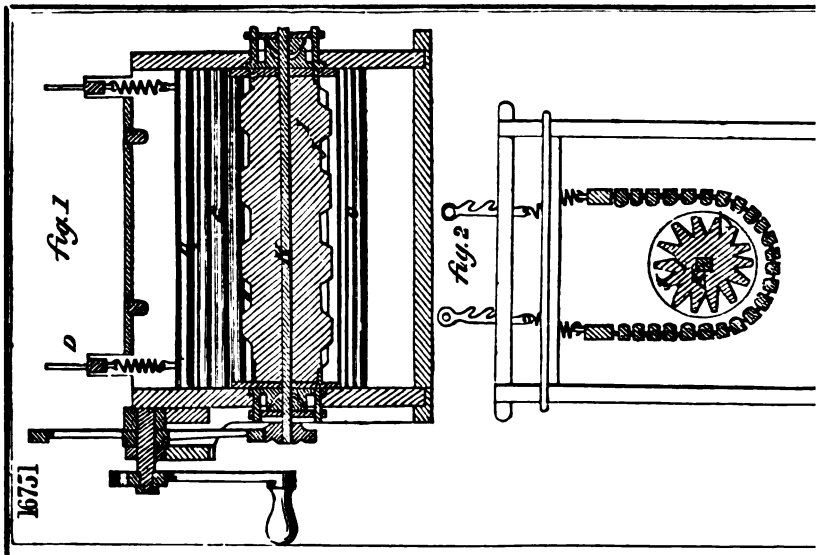
fig. 1
a
16751
fig. 2

18898

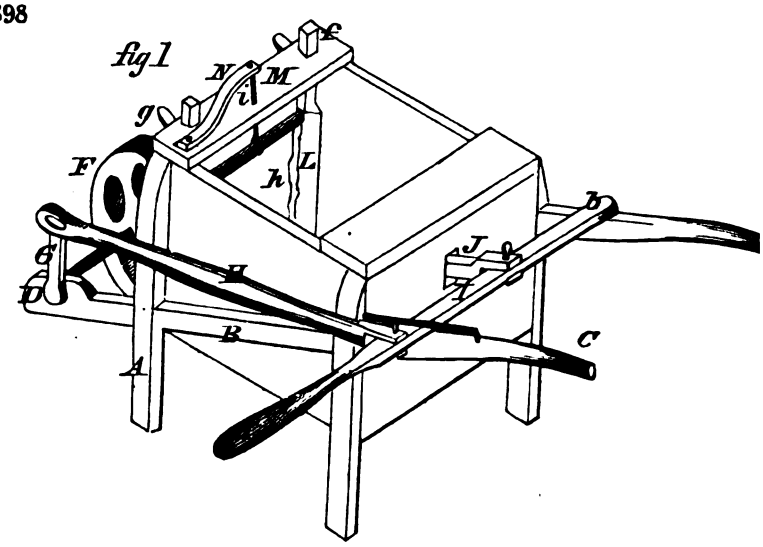
fig 1
E
N
M
i
g
F
h
L
b
J
G
H
D
B
C
A

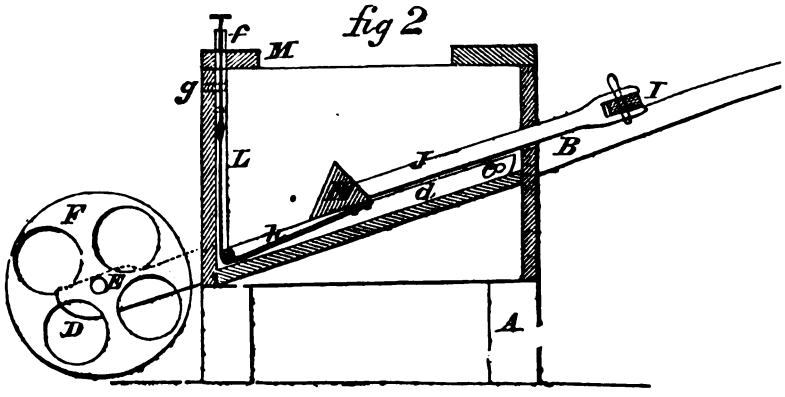
fig 2
f
M
g
I
L
J
B
d
F
k
E
D
A

18062

fig.1.

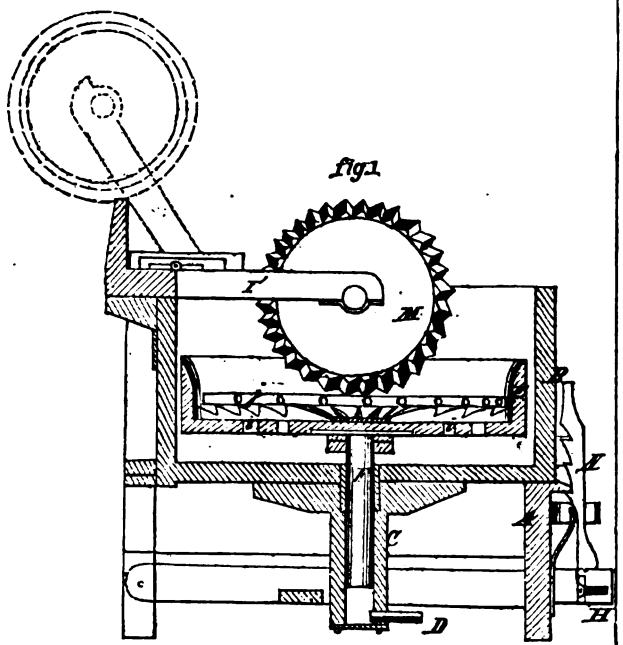

fig.2.

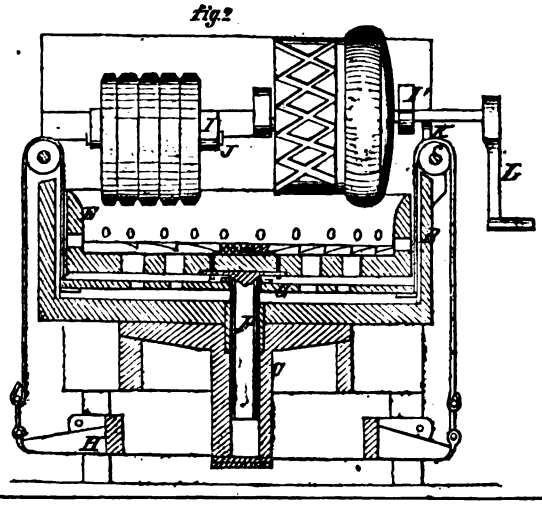

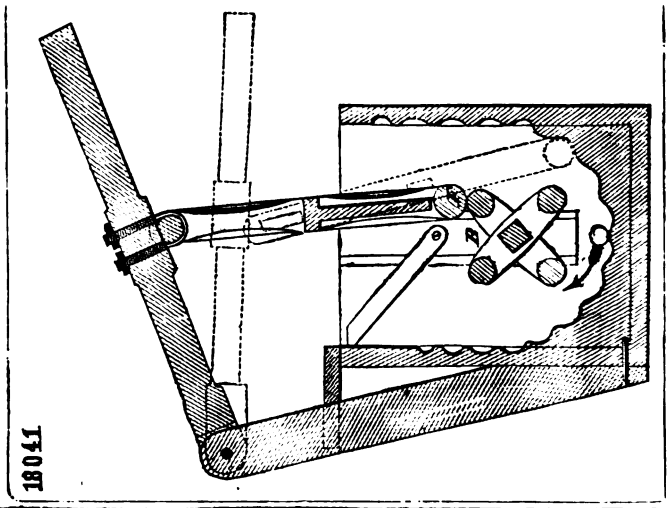

18041

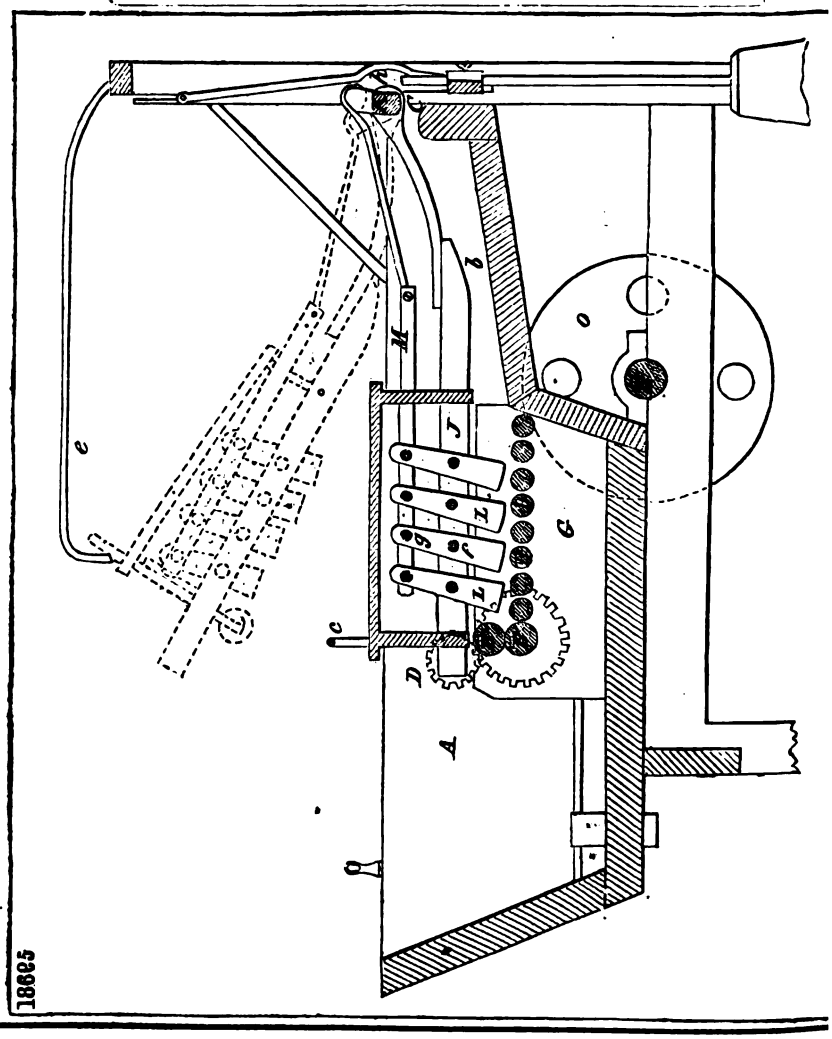

18625

18721

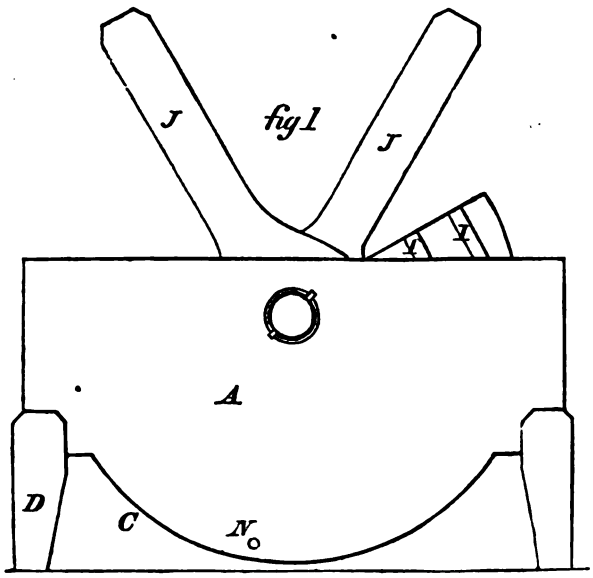

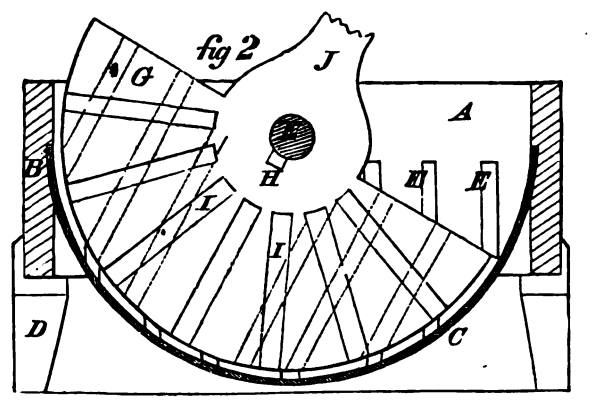

18168

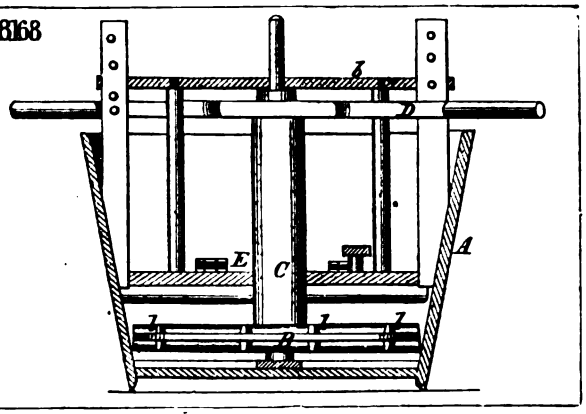

ad.18721

Fig 2

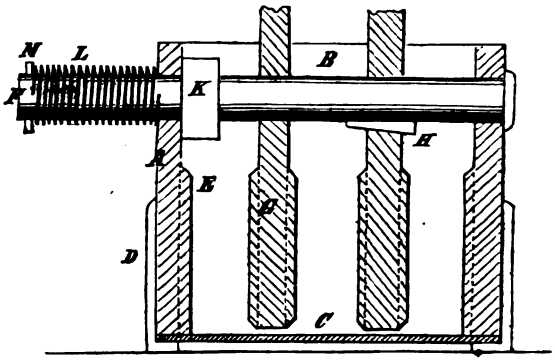

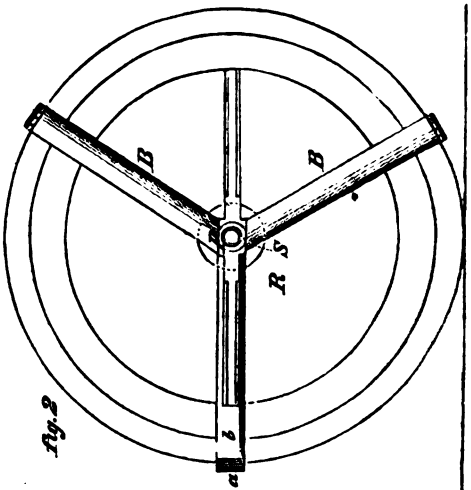

Fig 2

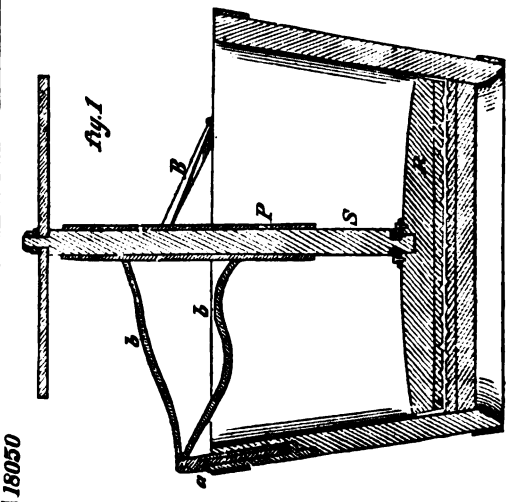

Fig 1

18050

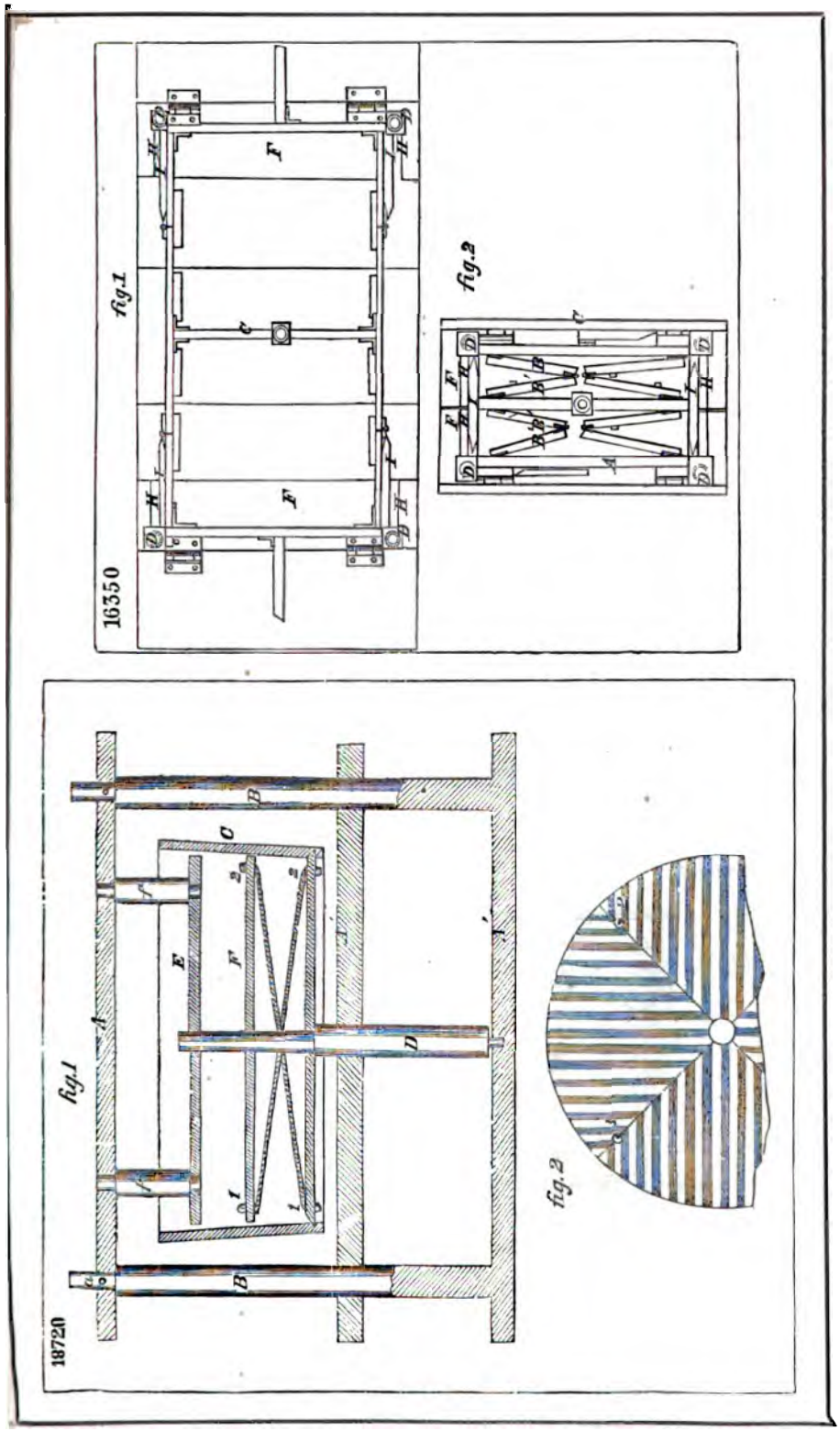
fig.1
16350
fig.2
fig.1
18720
fig.2

18889

fig 1

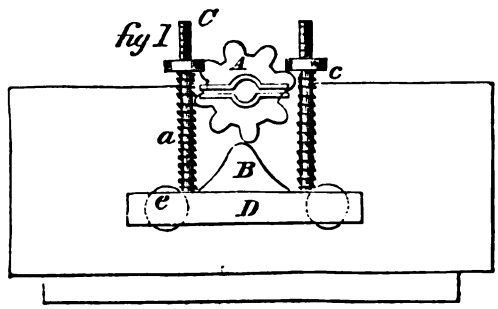

fig 2 h

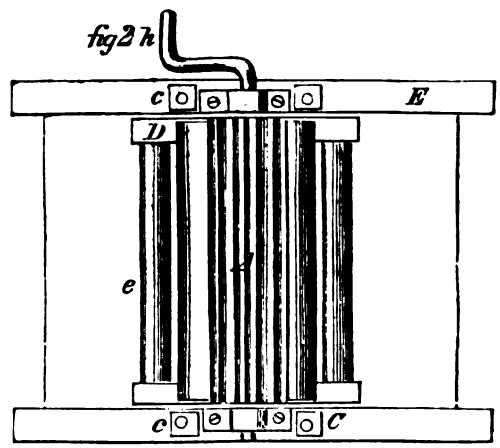

17377

fig. 1

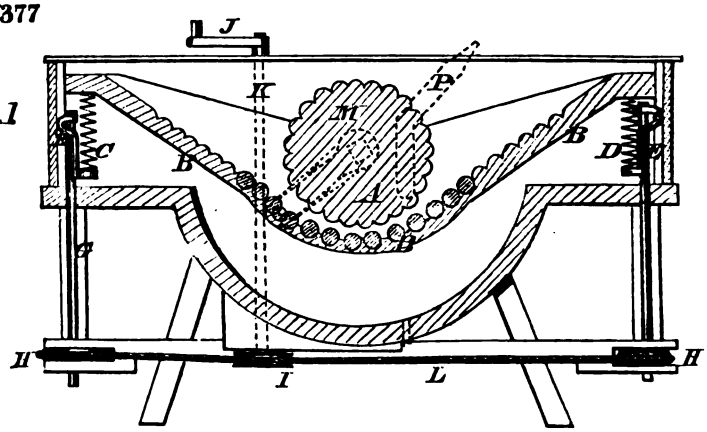

fig. 2

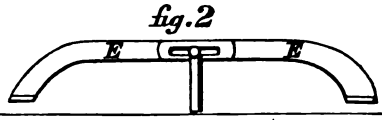

18956

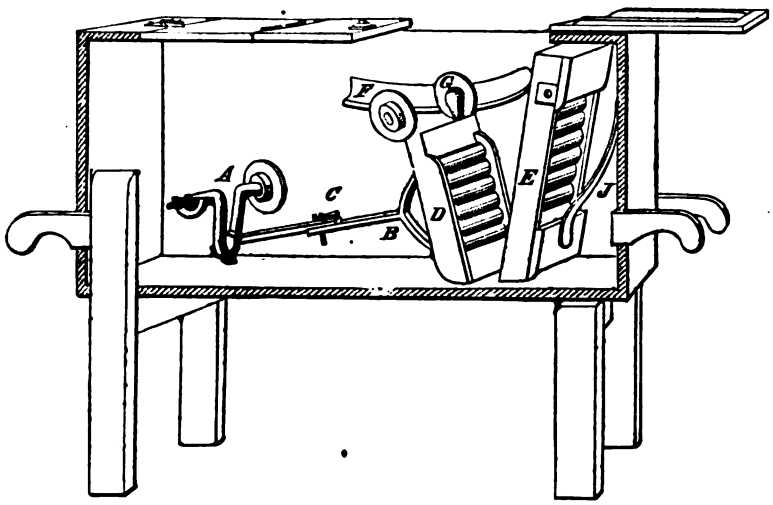

18407

fig.1

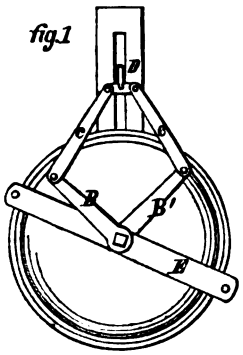

fig.2

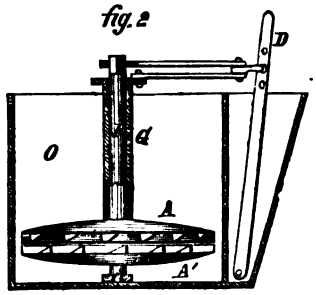

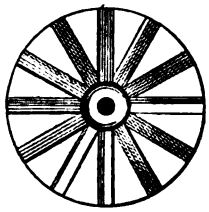

fig.3

17087

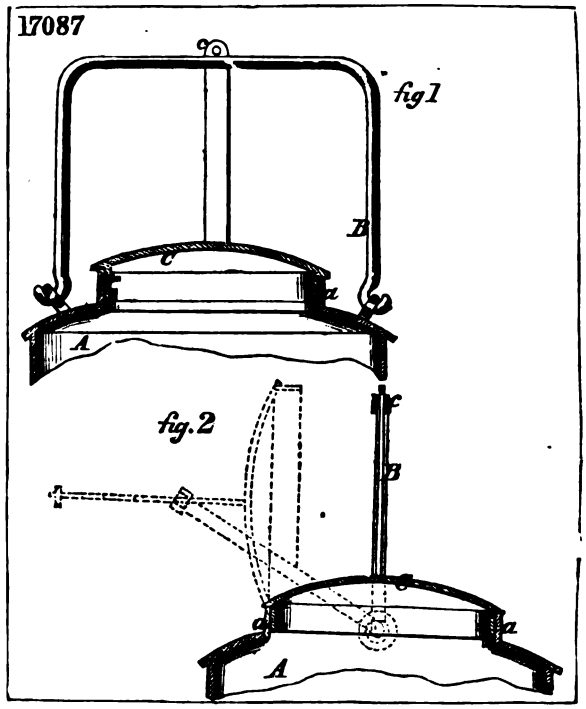

18630

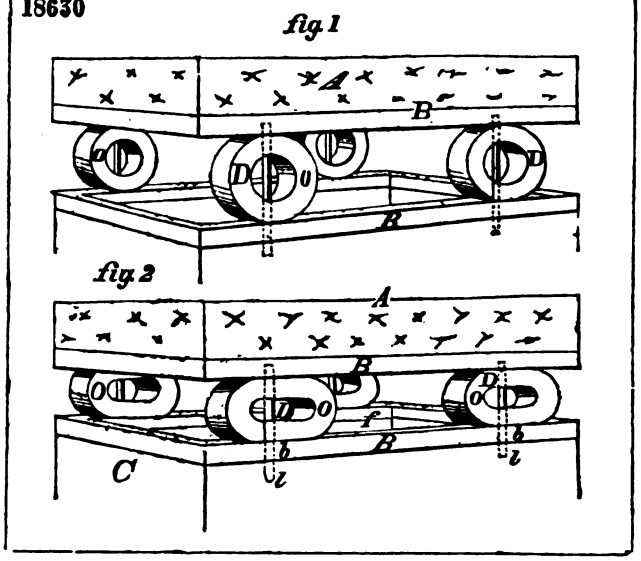

18067

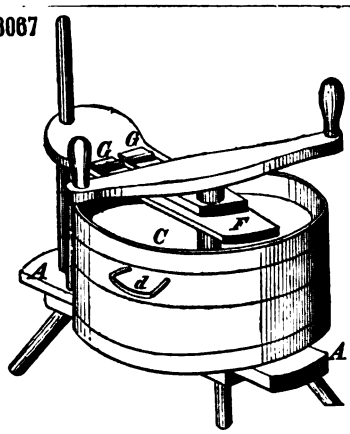

18733

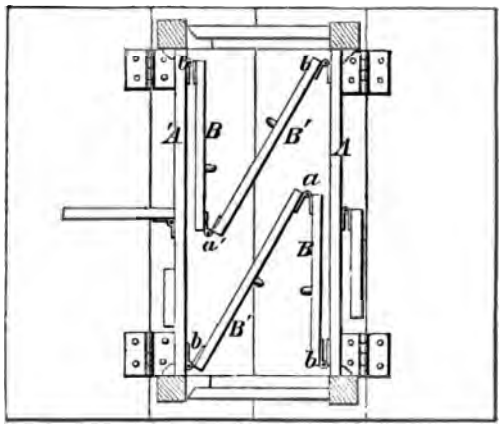

17180

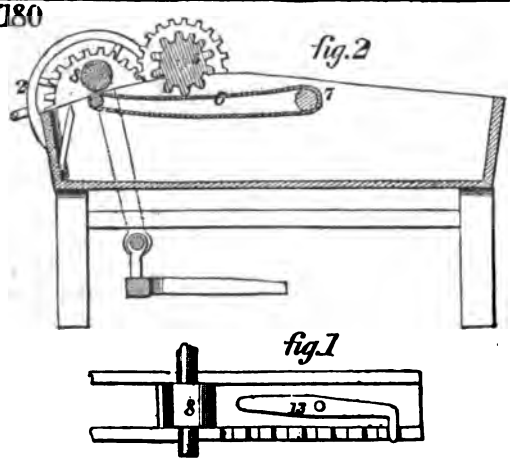

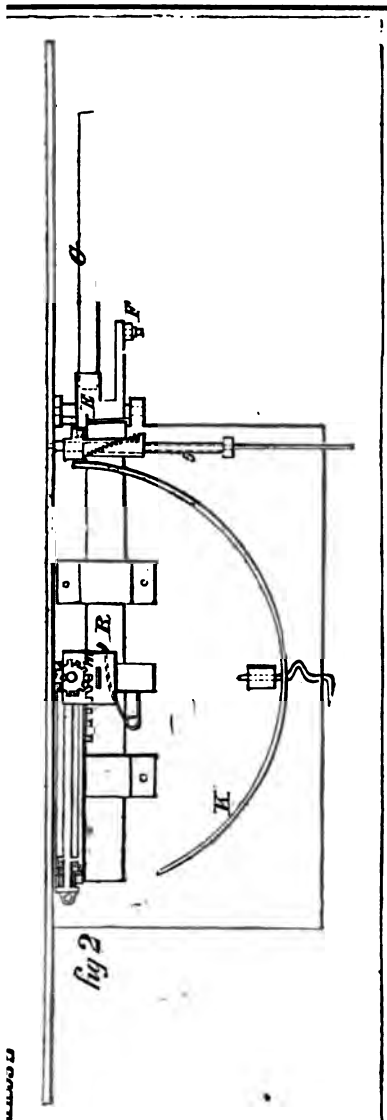

18288

fig. 1

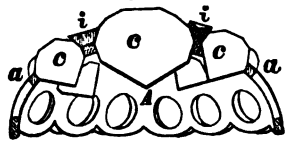

fig. 2

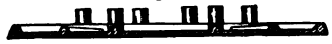

fig. 3

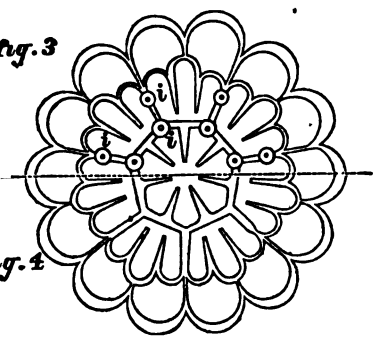

fig. 4

fig. 5

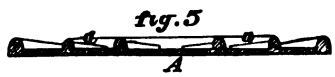

fig. 6

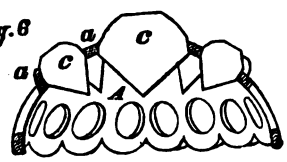

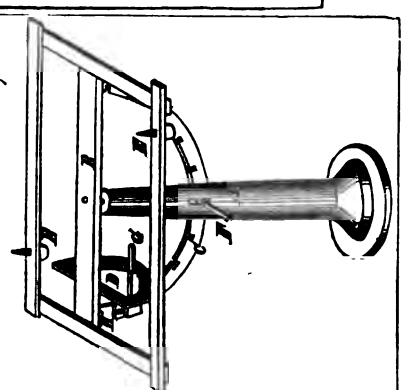

18198

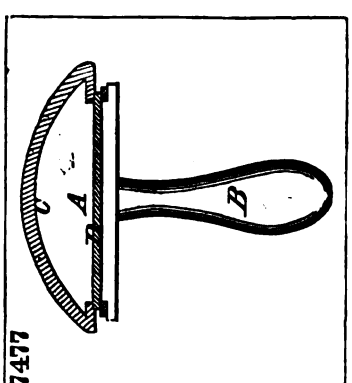

17477

17741.

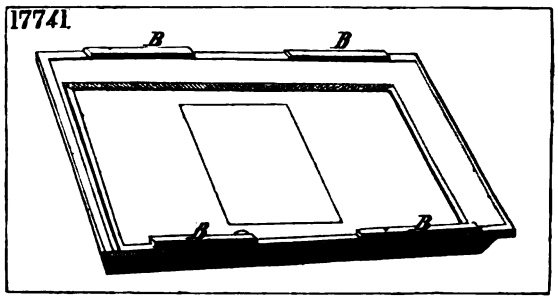

17480

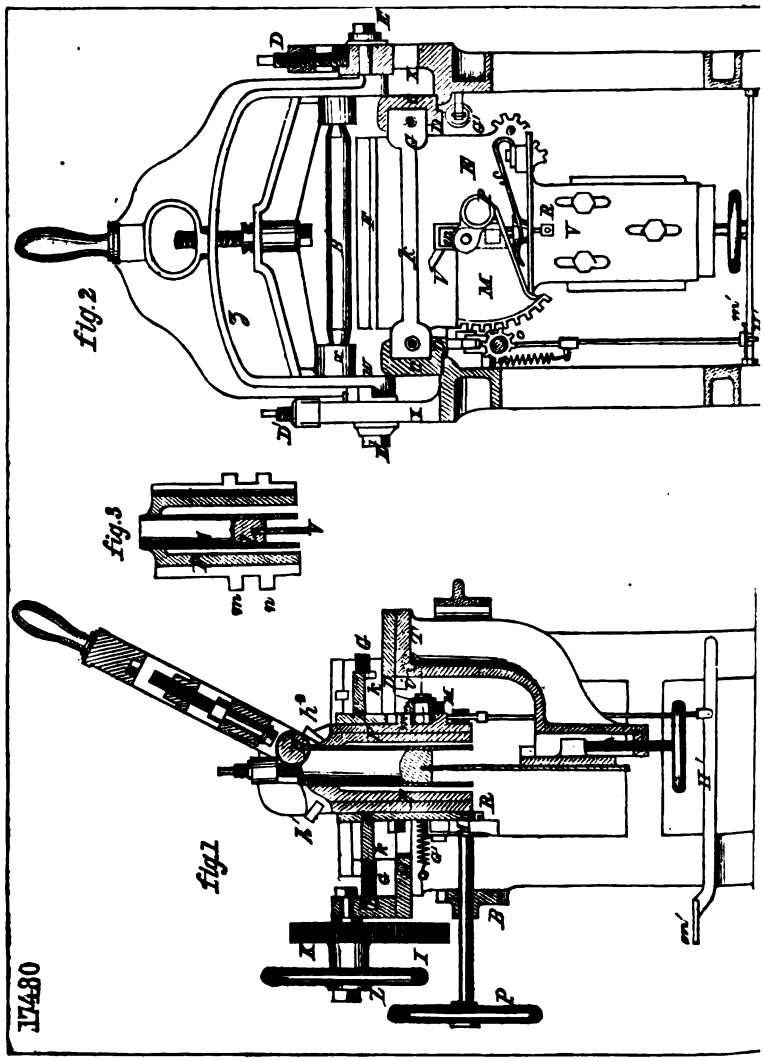

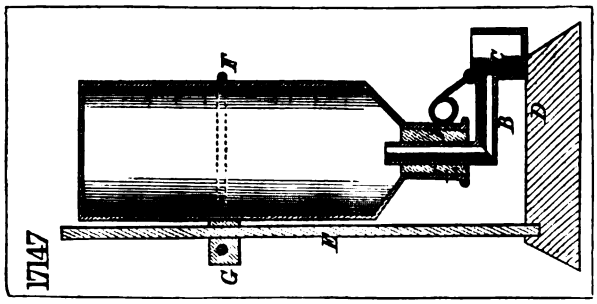
17147
T
B
D
G
M

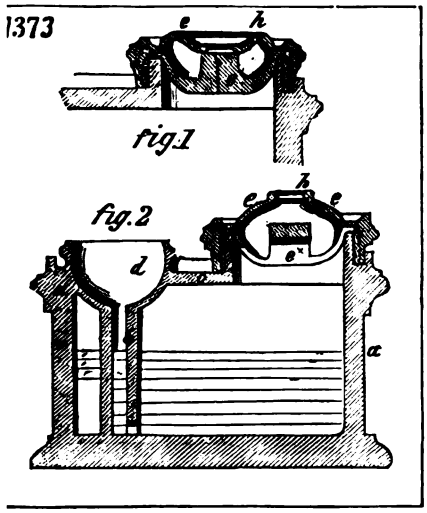
1373
e
h
fig.1
fig.2
c
h
e
e'
d
a

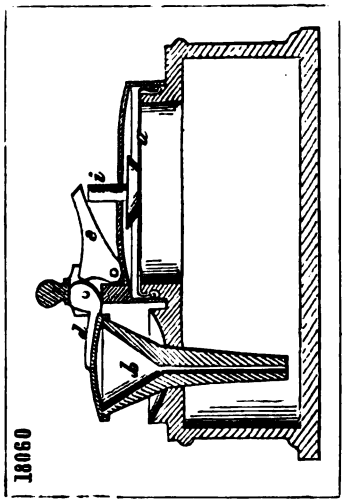
18060
i
e
d
b

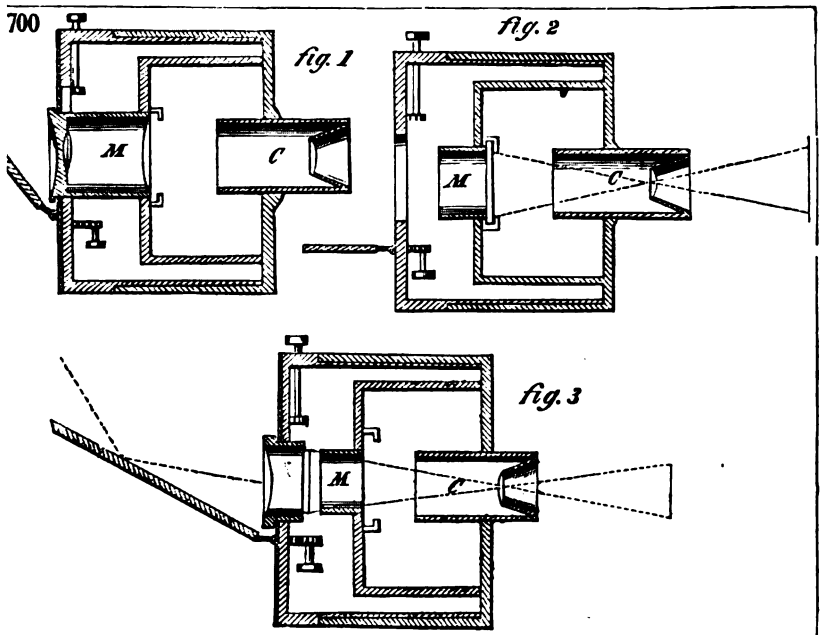
700
fig. 1
fig. 2
M
C
M
C
fig. 3
M
C

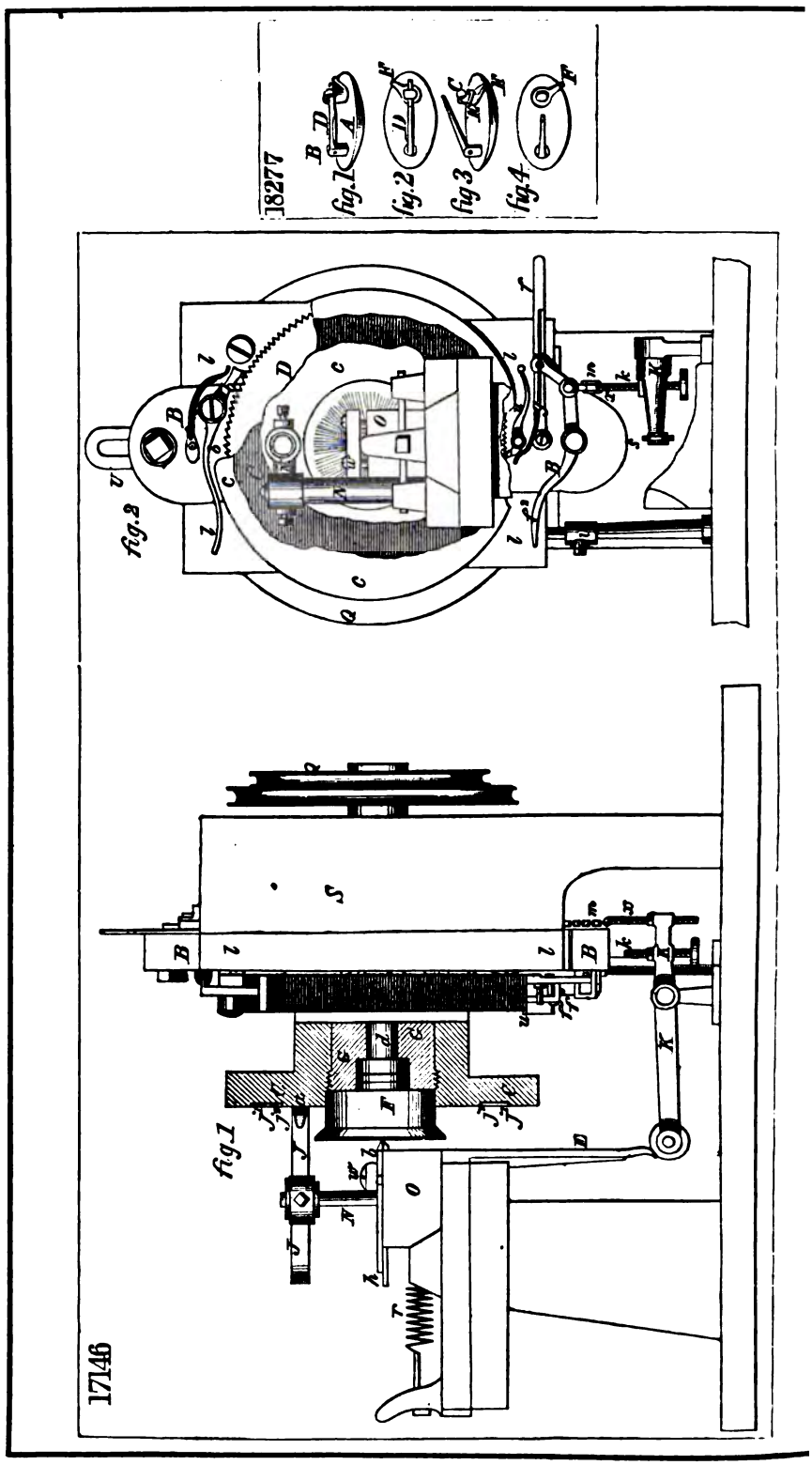
18277
fig.1
fig.2
fig.3
fig.4
fig.2
fig.1
17146

16576

fig. 1

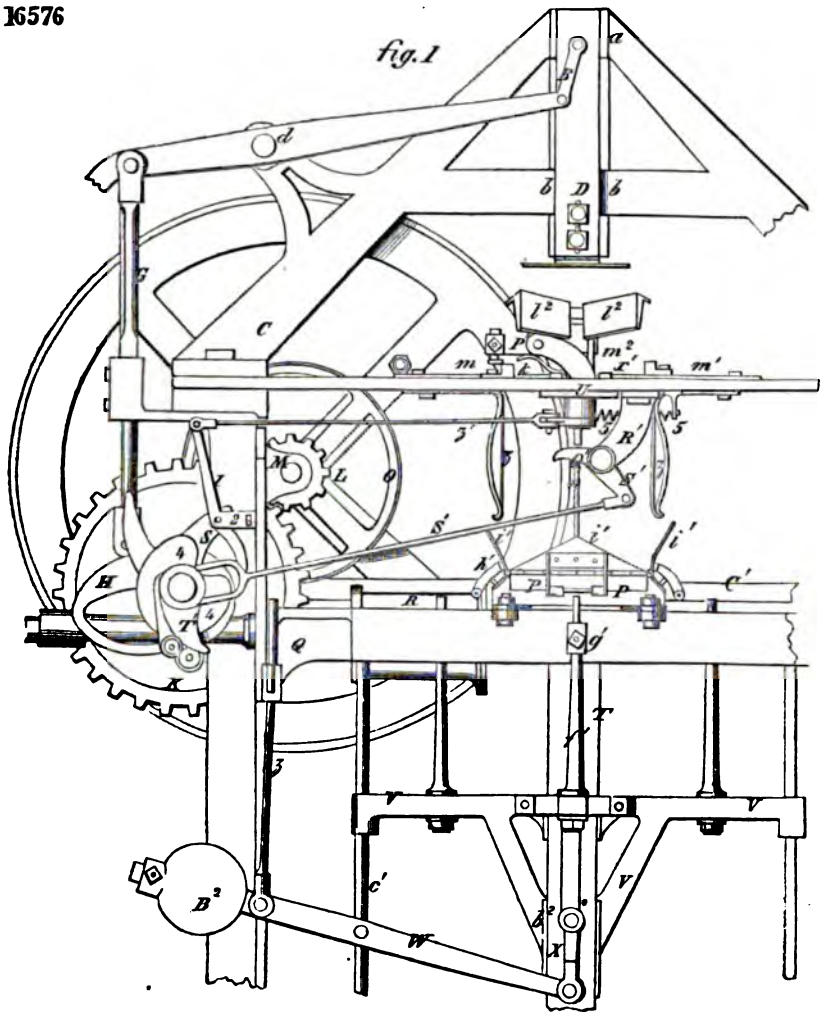

fig. 4

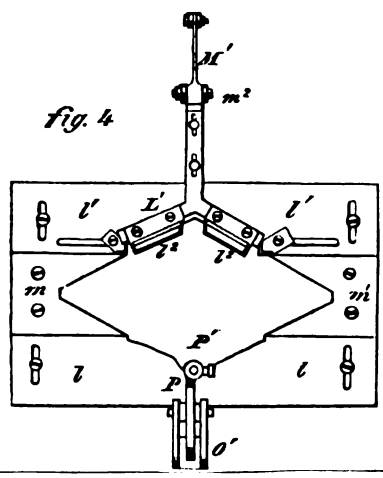

17800

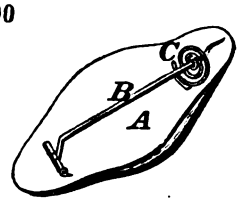

17137 fig.1

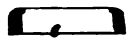

fig.3

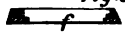

fig.4

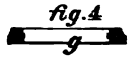

16576

fig.5

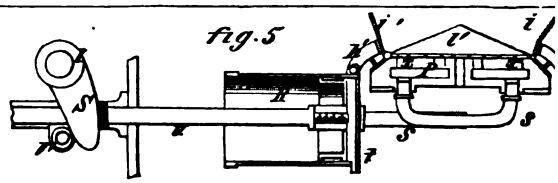

fig.3

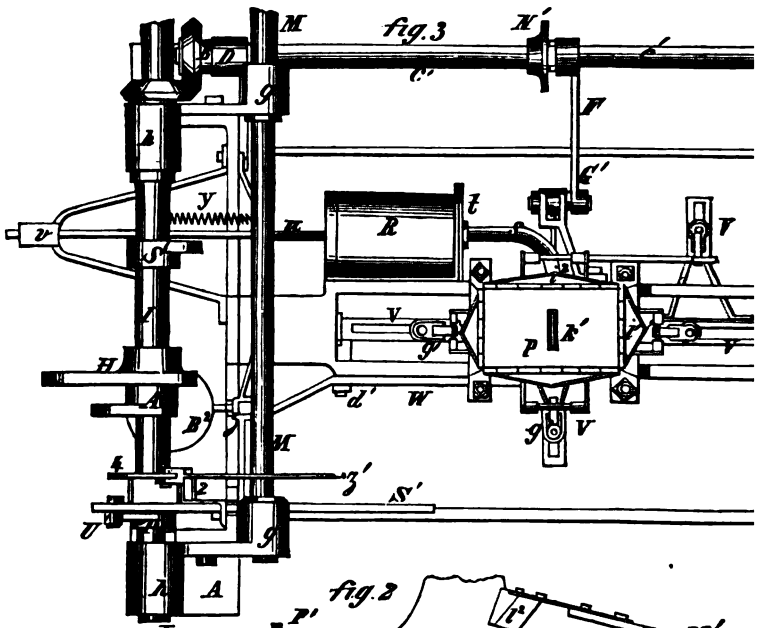

fig.2

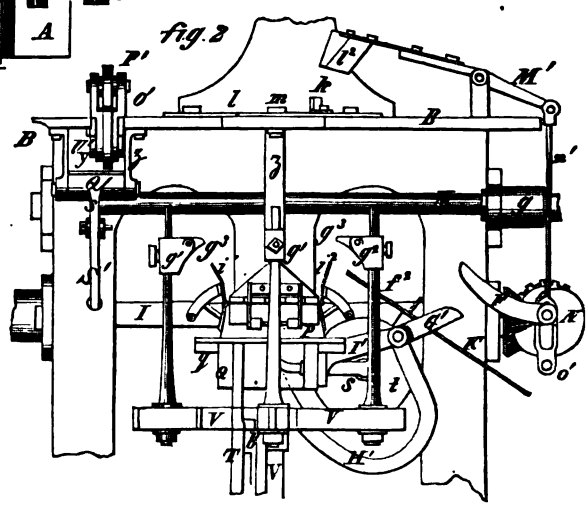

17299

fig. 1

fig. 2

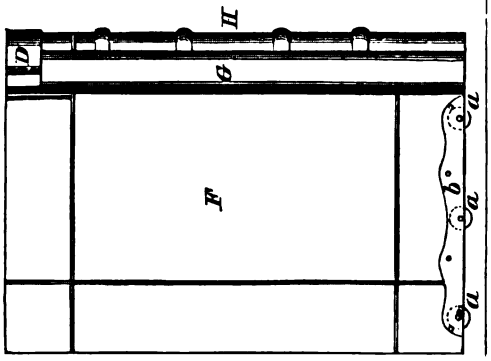

290

fig 1

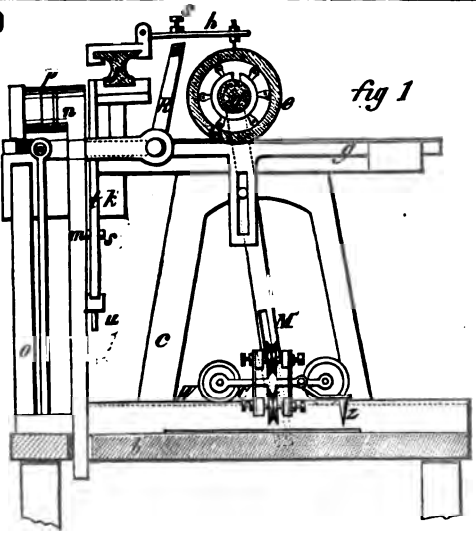

fig 2

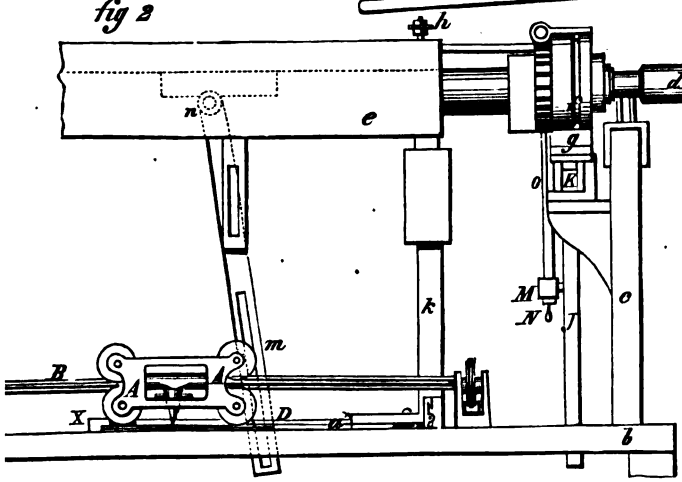

fig 3

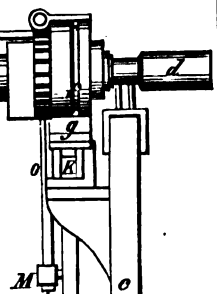

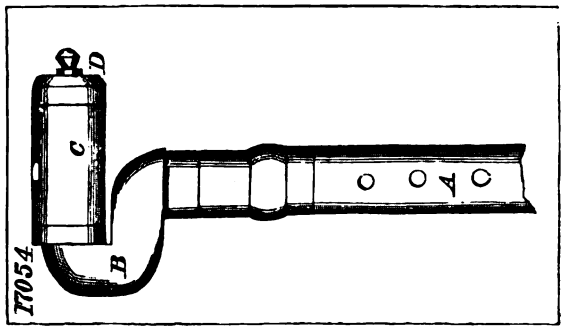

18857

fig 1.

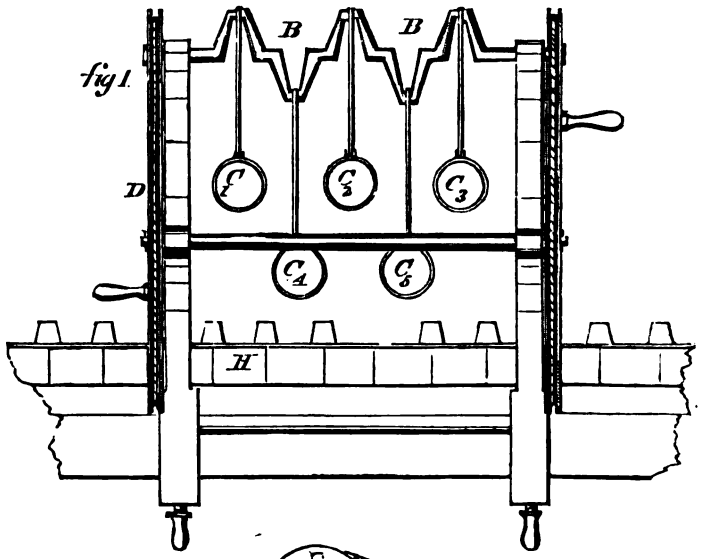

fig 2

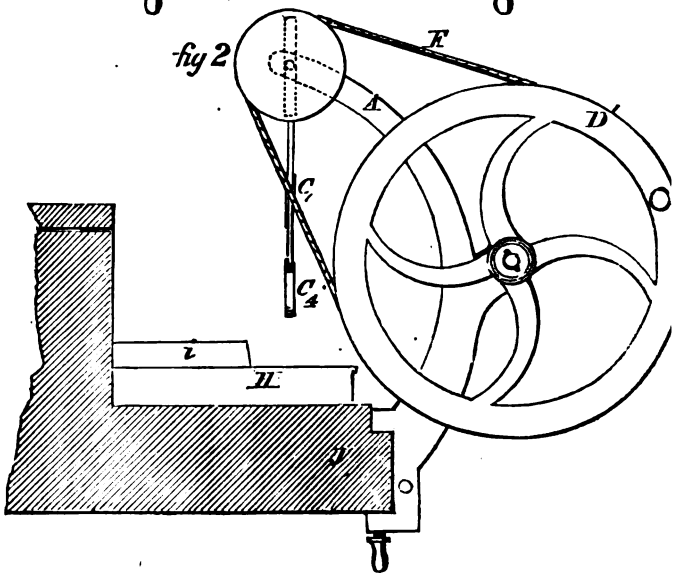

760

fig.1

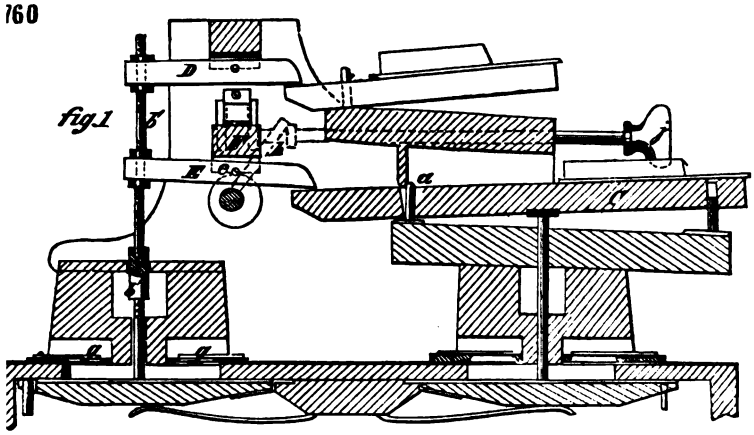

fig.2

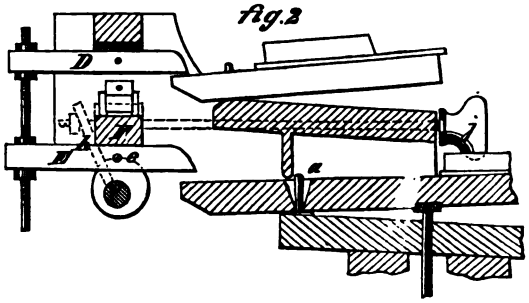

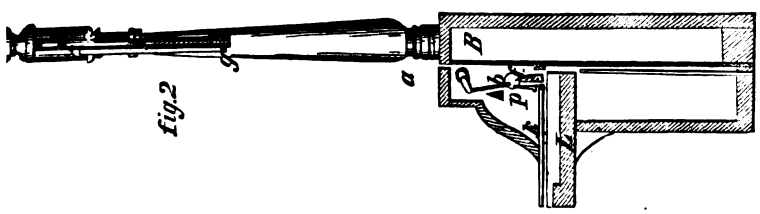

fig.1

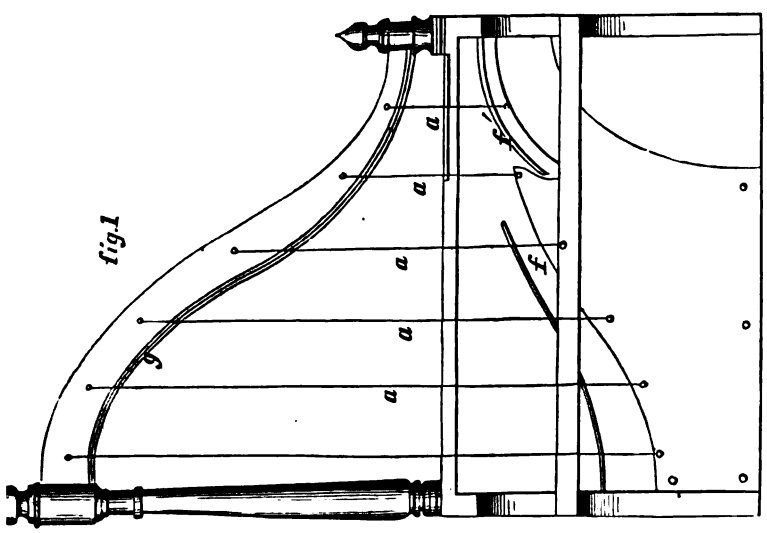

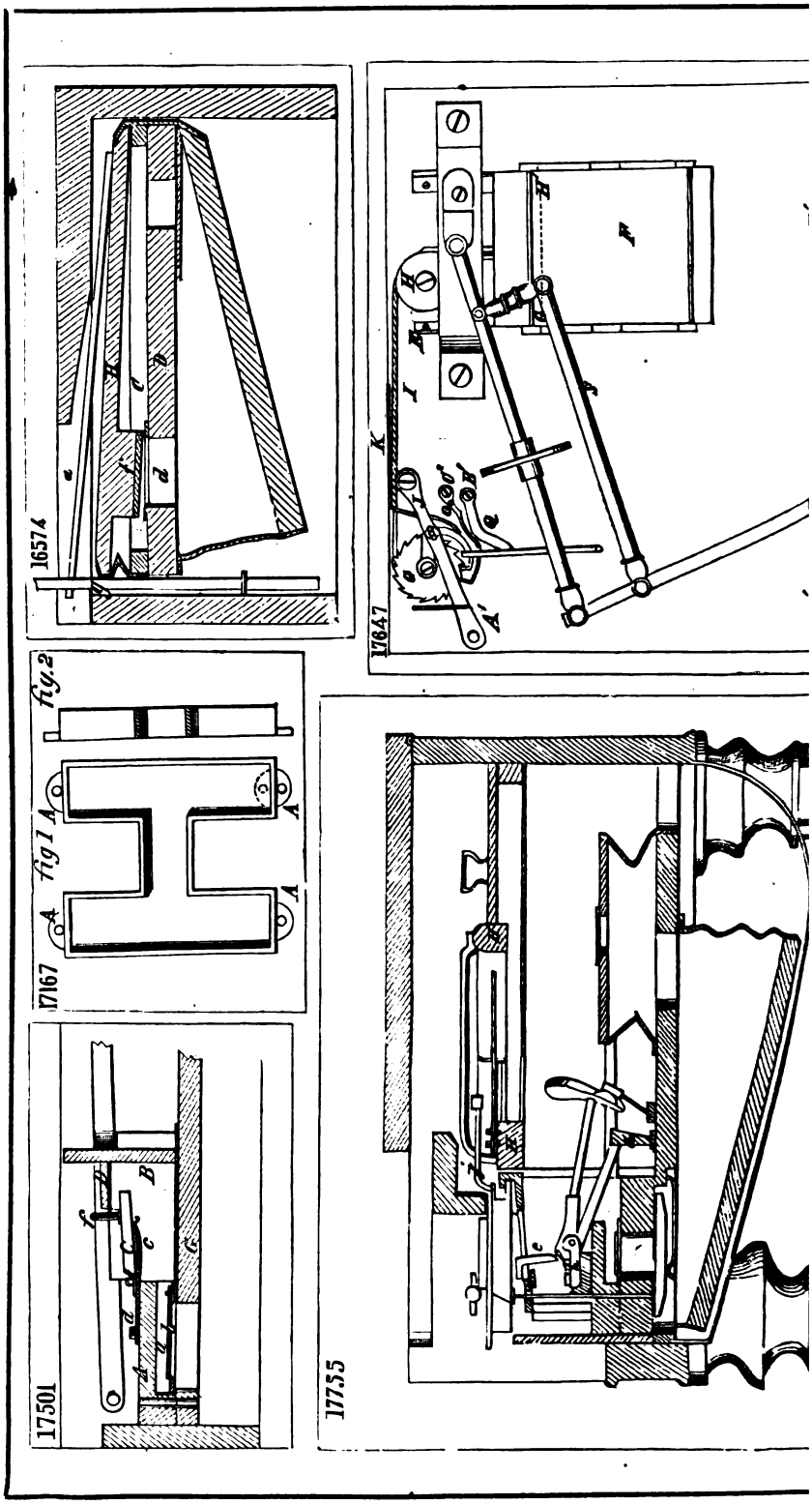
16574
17647
17167
Fig 1
Fig 2
17501
17755

16399

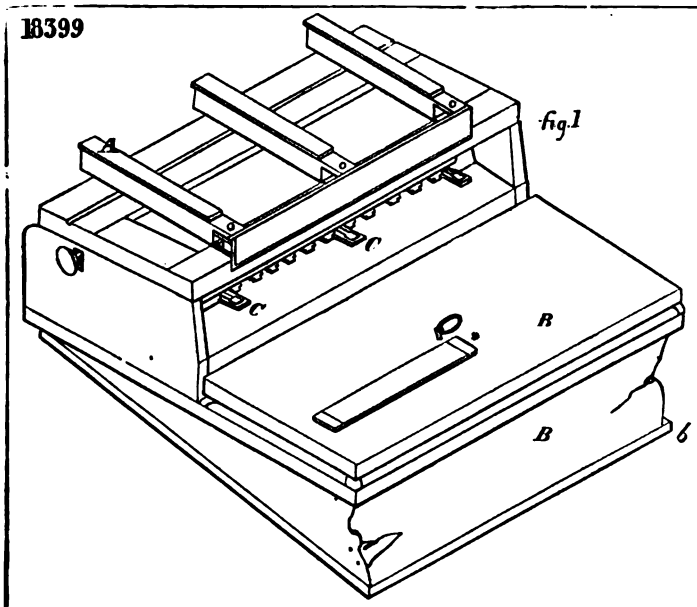
fig.1
A
C
C
B
B
b

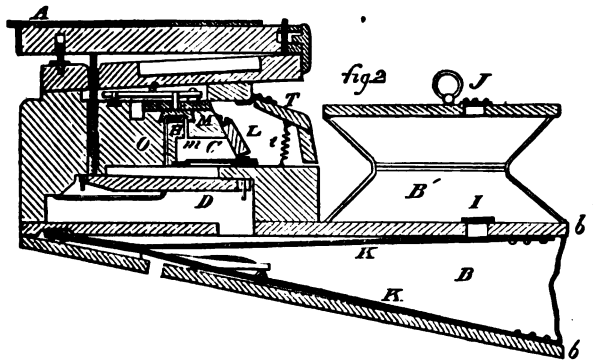
A
fig.2
J
T
M
B
O
m
C
L
t
D
B'
I
b
K
B
K
b

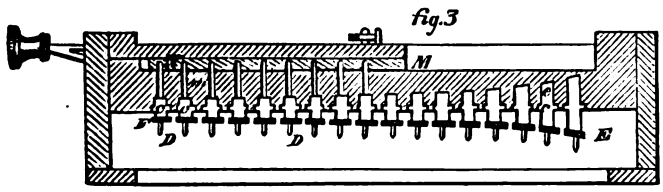
fig.3
M
D
D
E

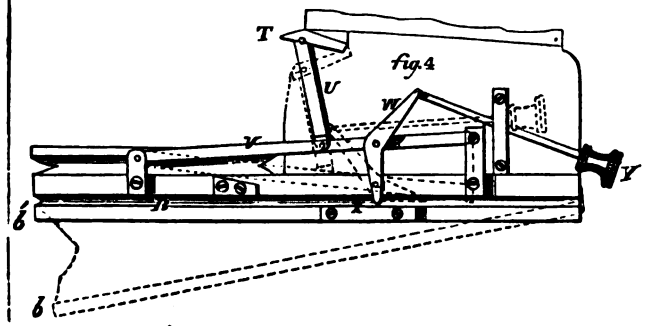
T
fig.4
V
W
Y
X
b
b

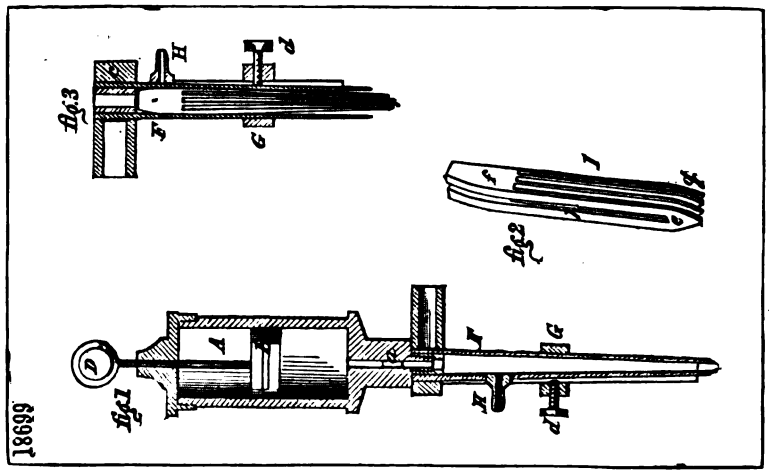
fig.3
fig.2
fig.1
18699

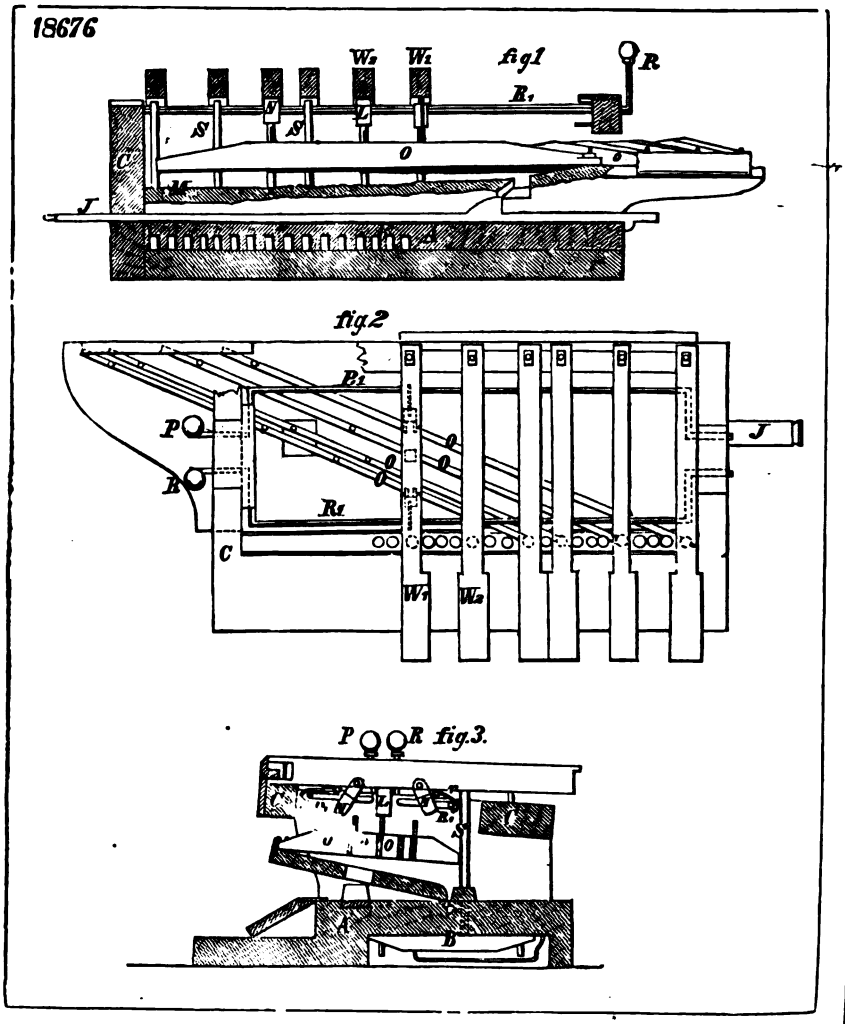
18676
fig1
fig.2
fig.3.

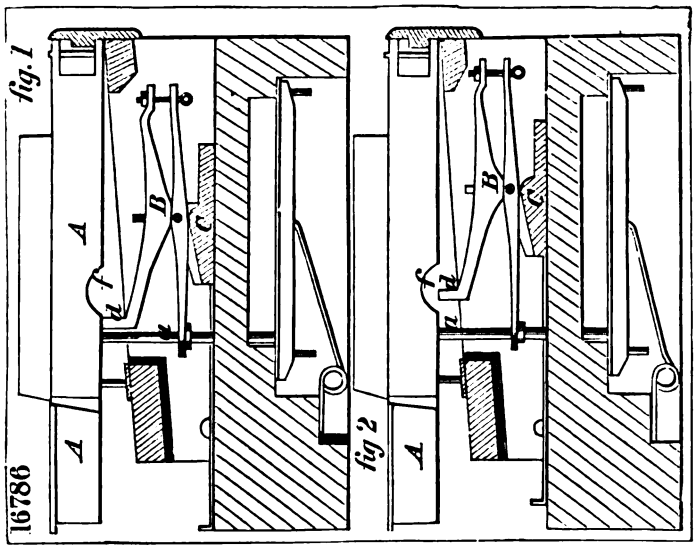
16786
fig. 1
A
B
C
f
a
fig 2
A
B
C
f
a

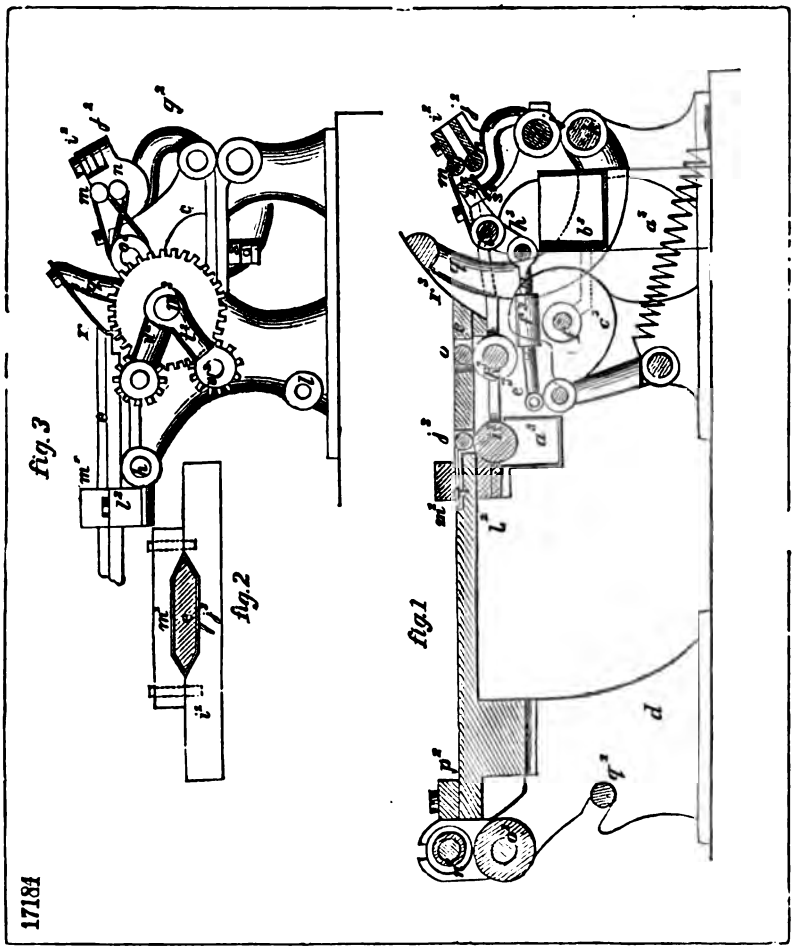
17184
fig. 3
fig. 2
fig. 1
d

18075

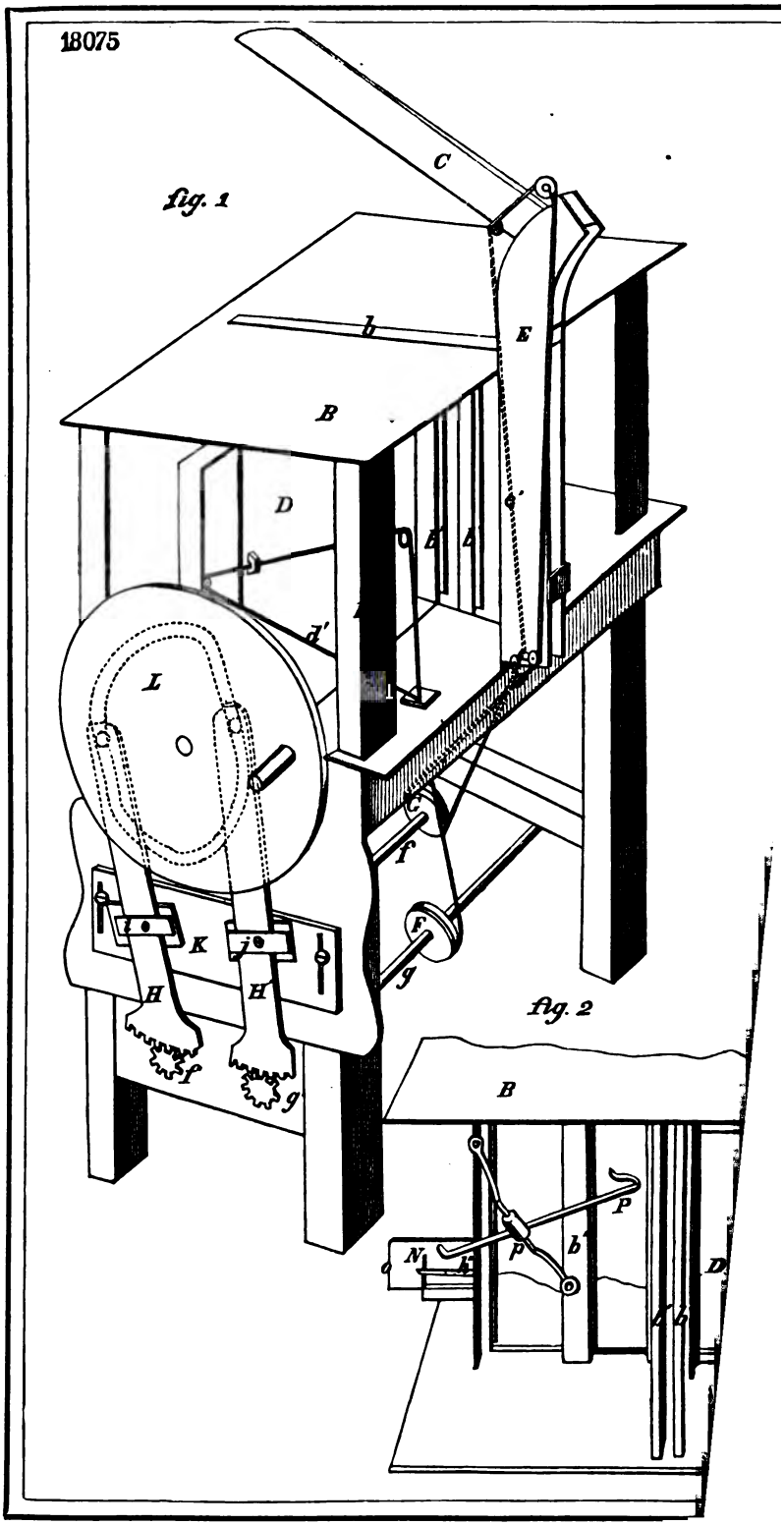

18533

fig.1

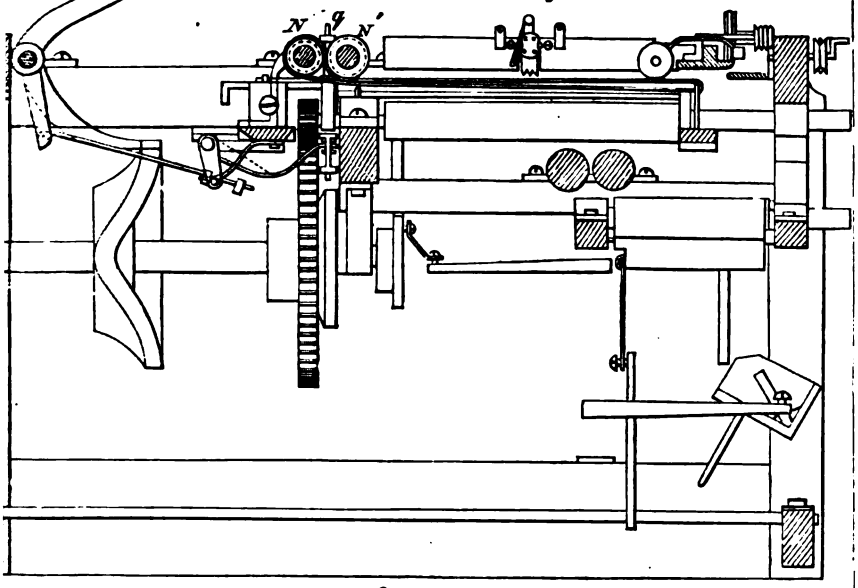

fig.2

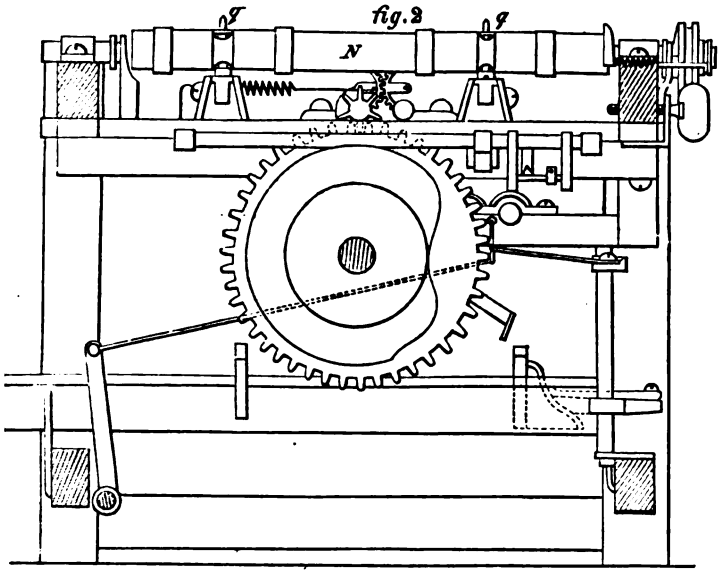

fig.5

fig.4

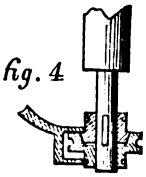

fig.3

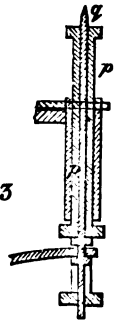

18284

fig.1

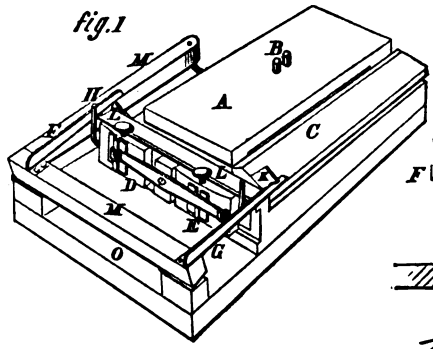

fig.2

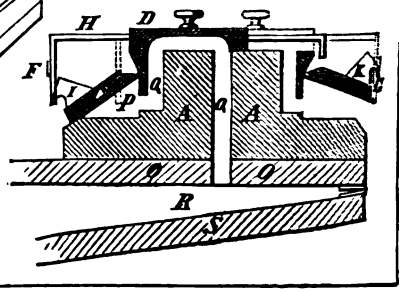

17196

fig.1

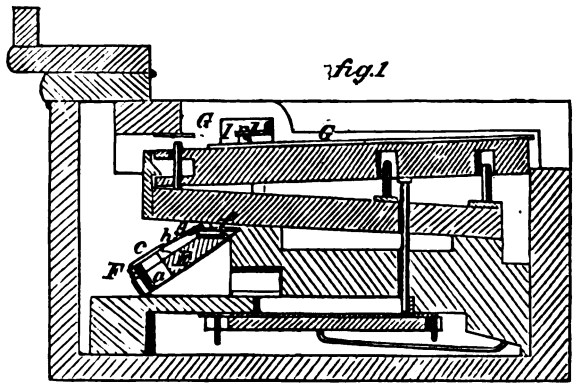

fig.2

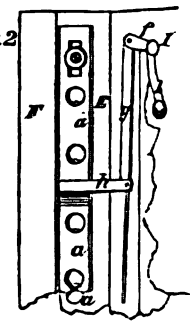

17526

fig.1

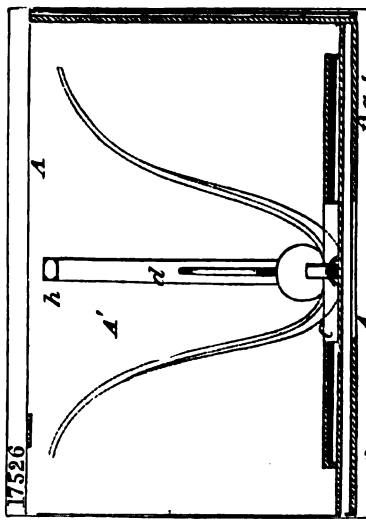

fig.2

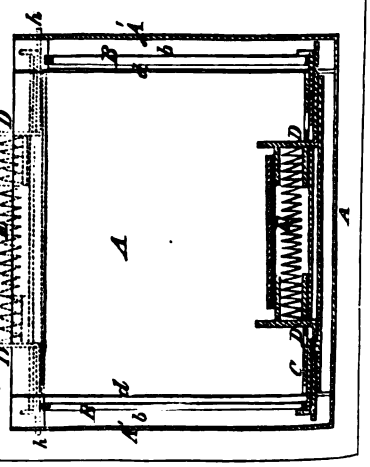

16637

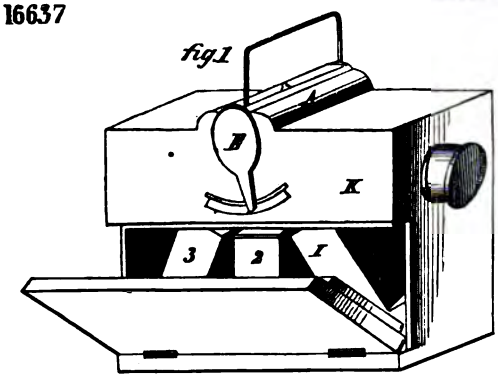

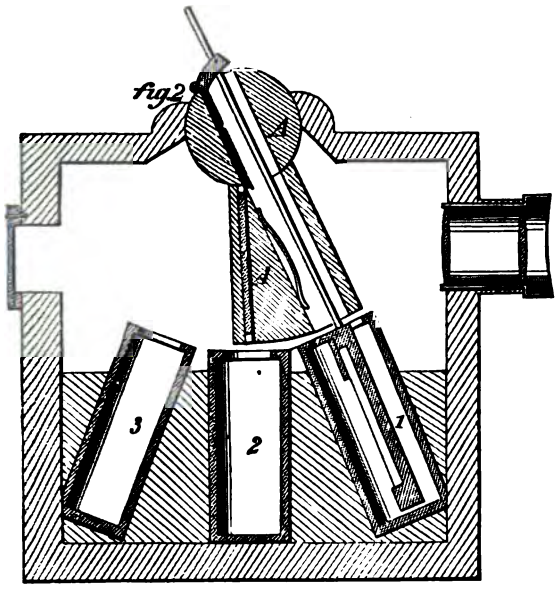

17776

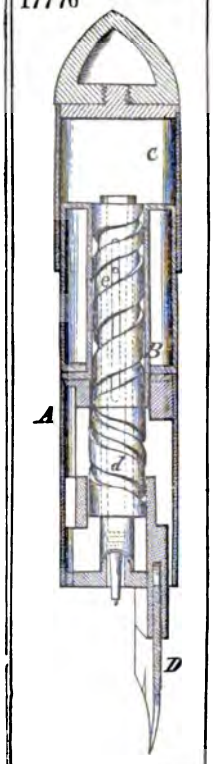

17749

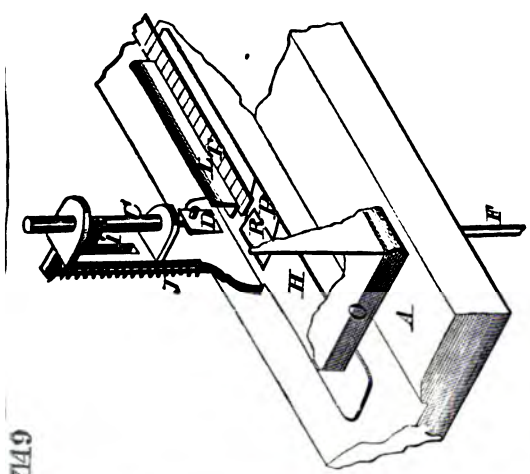

18365

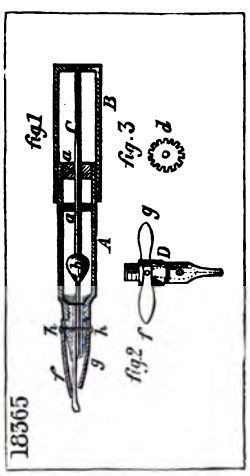

16711

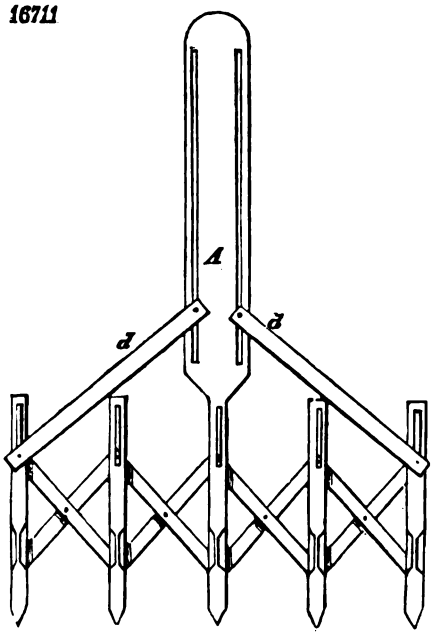

16995

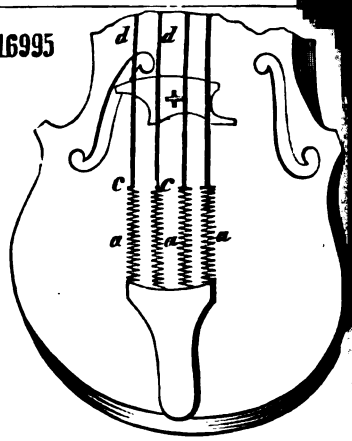

18581 fig.1 fig.2

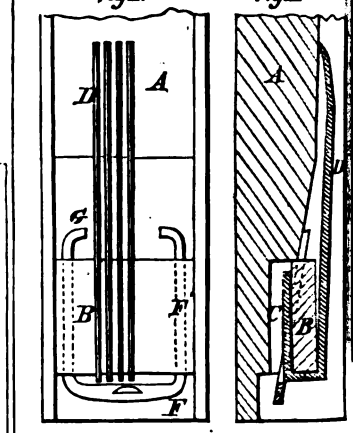

18218

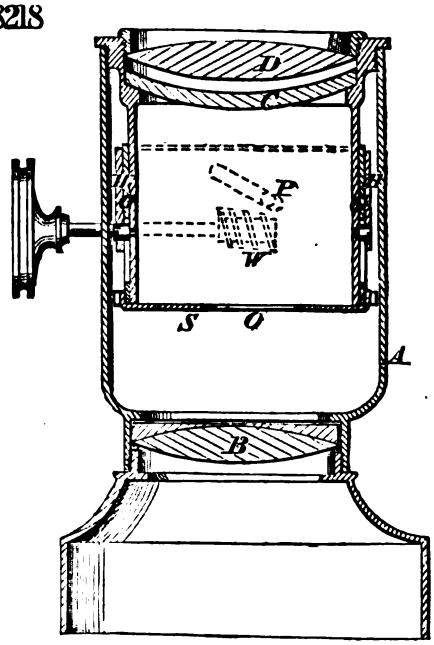

17298 fig.1 fig.2

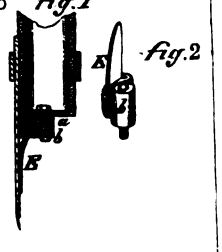

16689 fig 1 fig 2 A

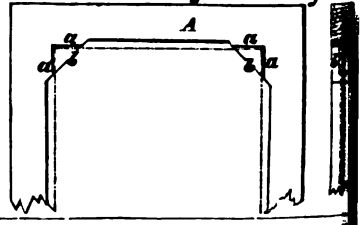

1752

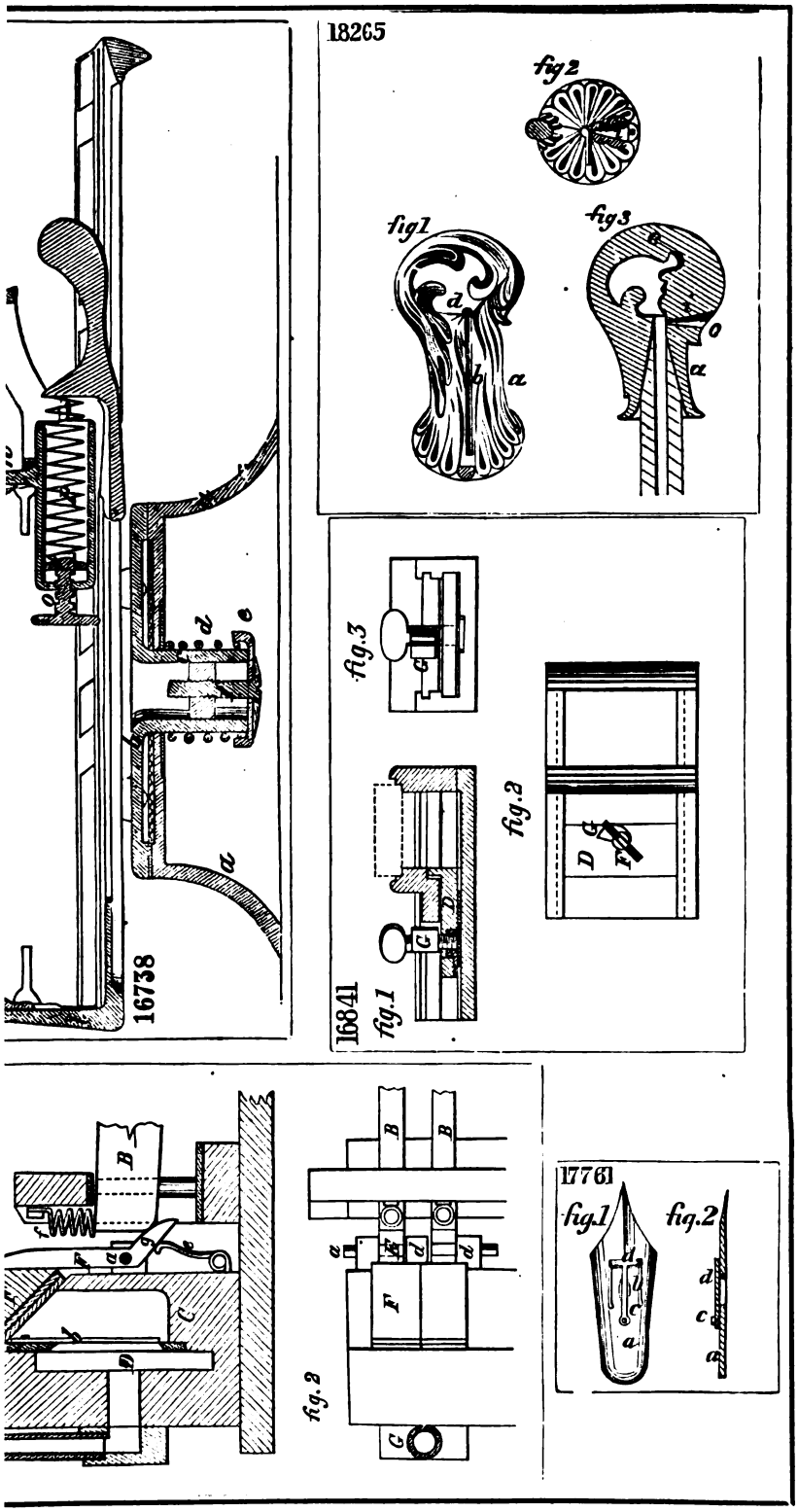
16738
18265
fig 2
fig 1
fig 3
16841
fig.1
fig.2
fig.3
fig.2
17761
fig.1
fig.2

16832

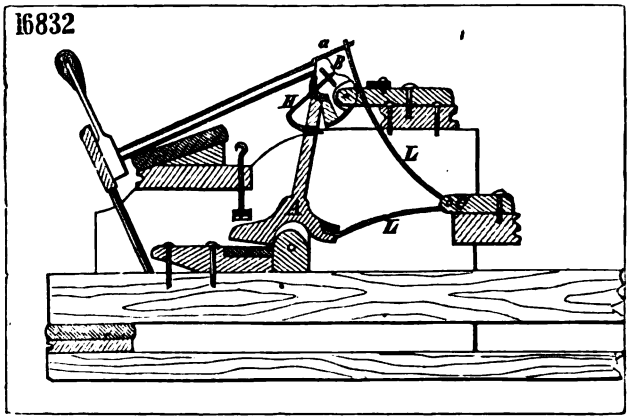

17066

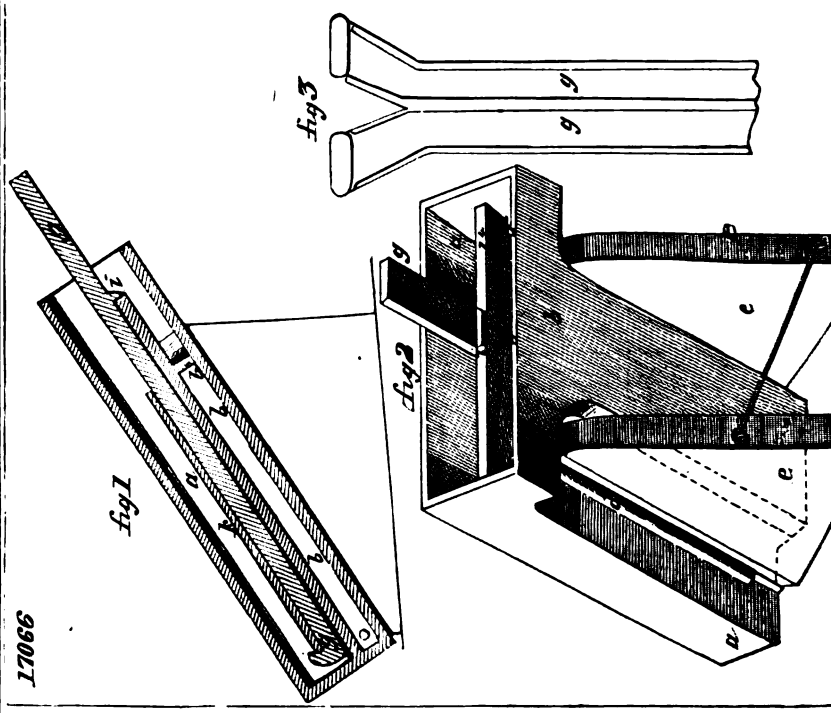

16496

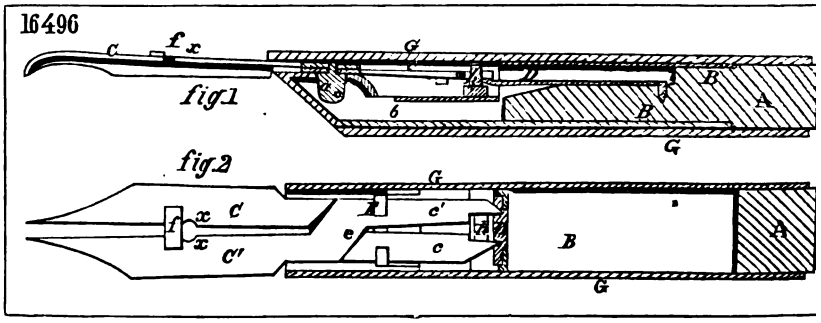

16514

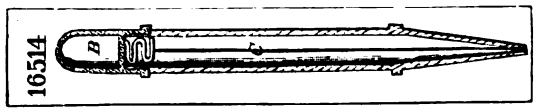

17238

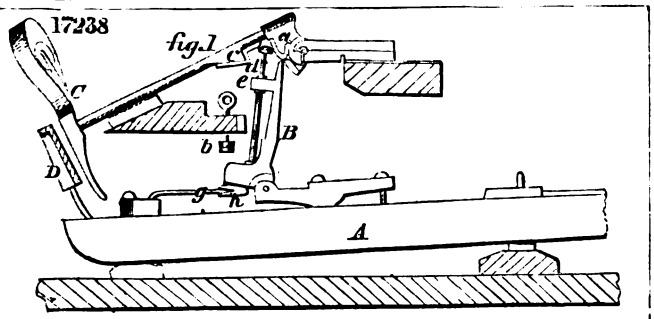

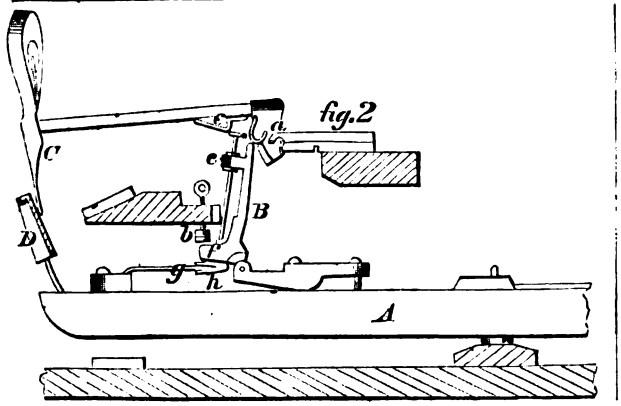

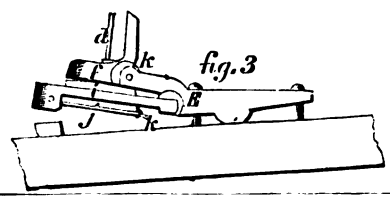

18453

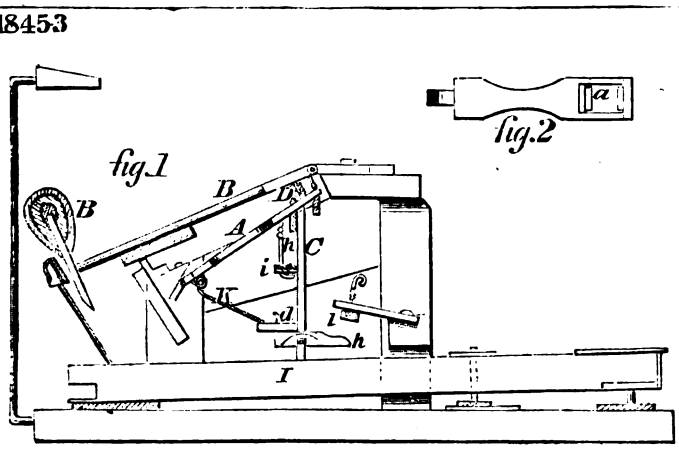

99

fig.1

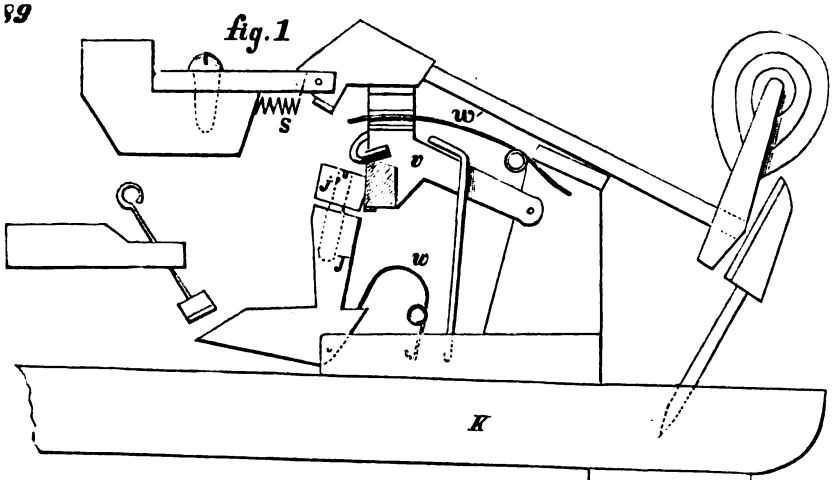

fig.2

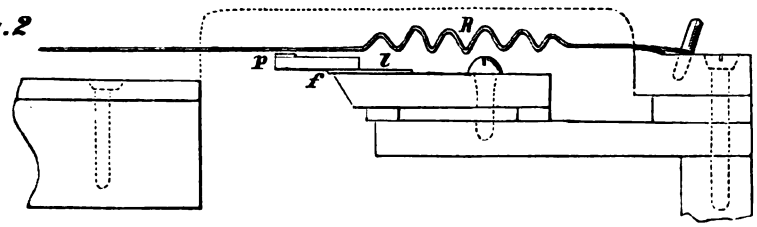

18780

fig.1

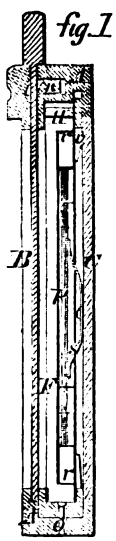

fig.2

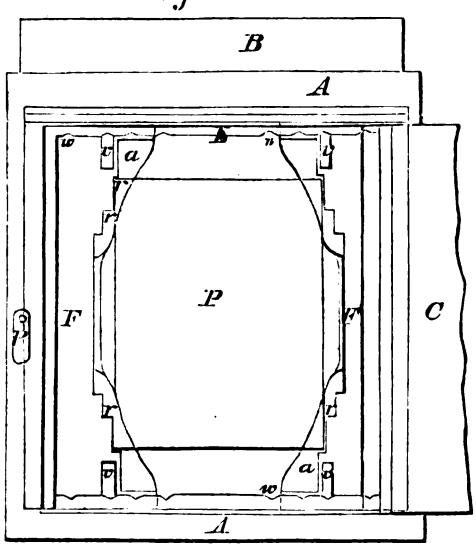

18673

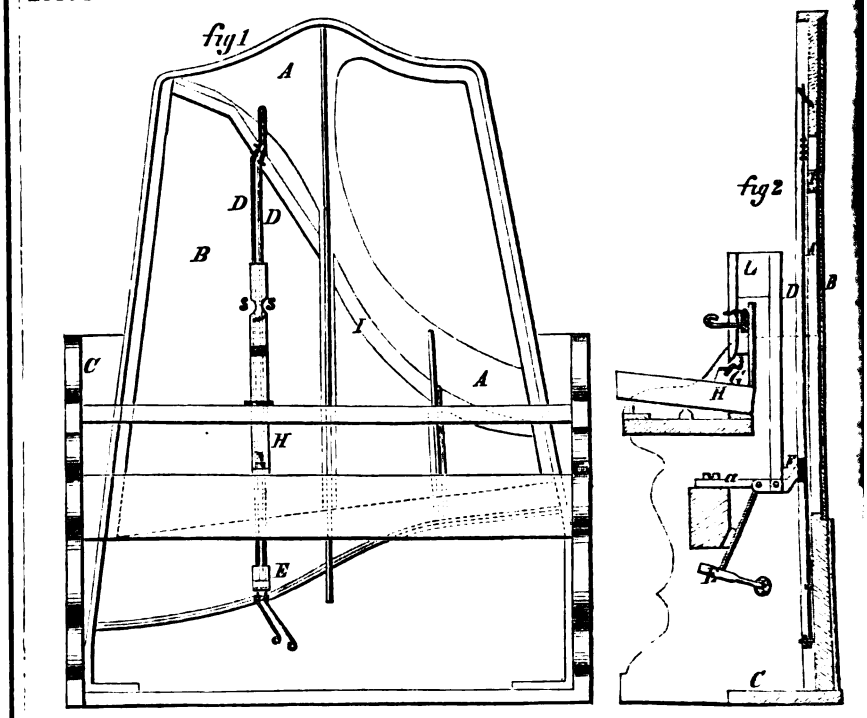

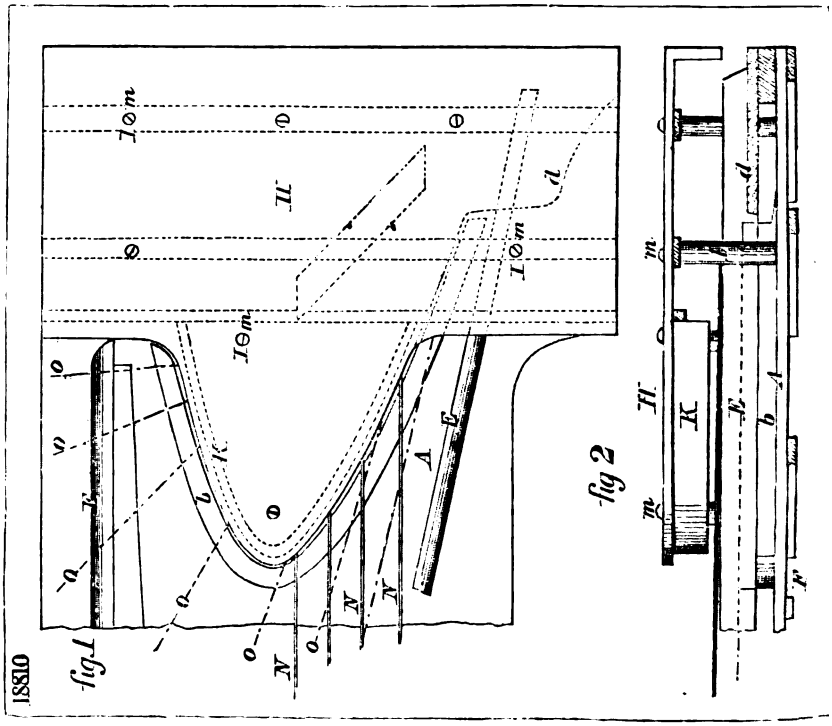

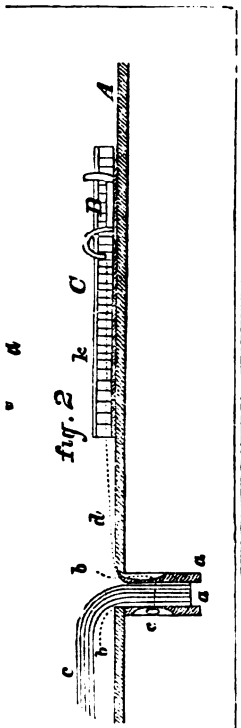

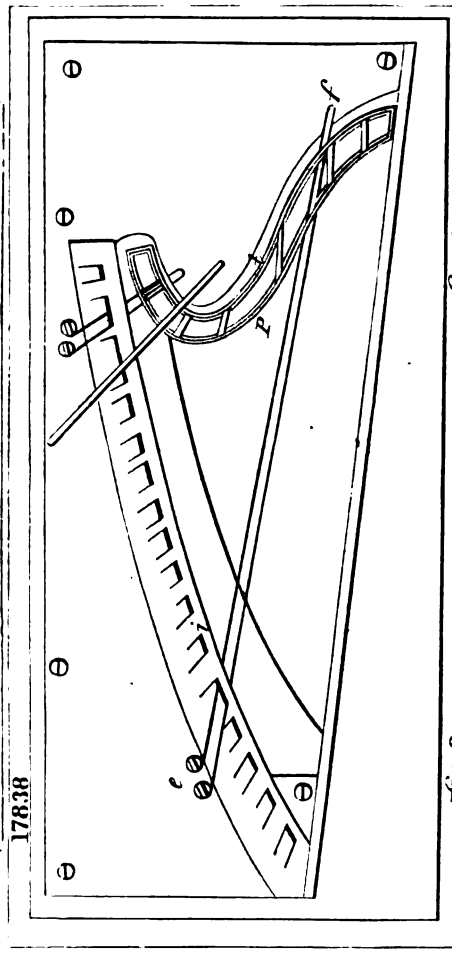

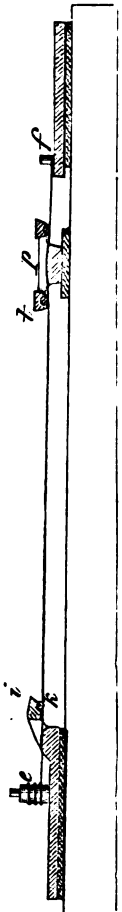

17148

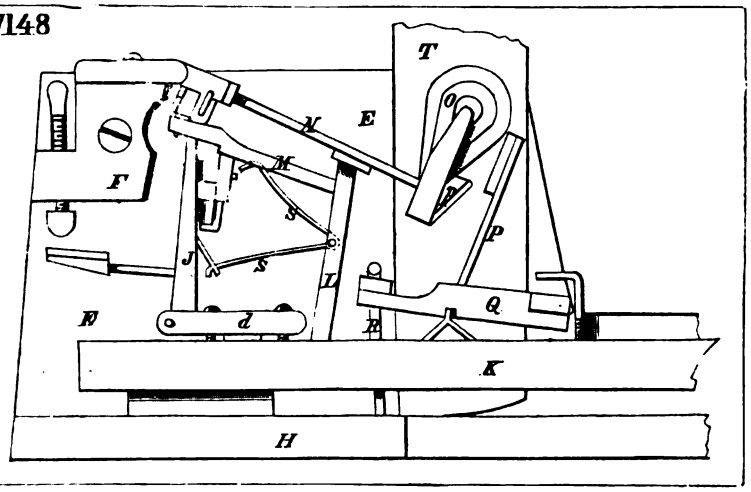

16718

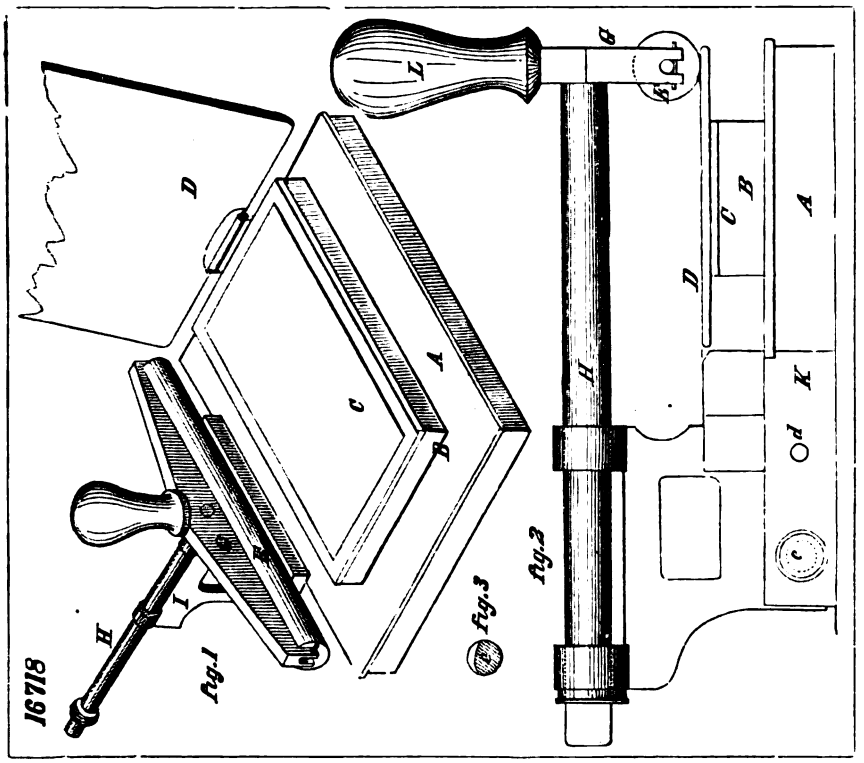

17307

fig.1

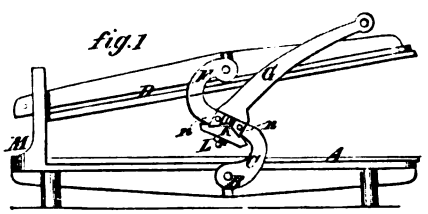

fig.2

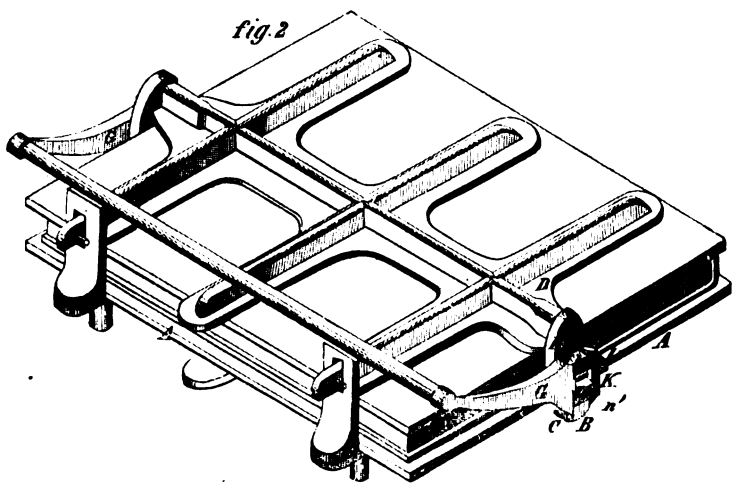

16500

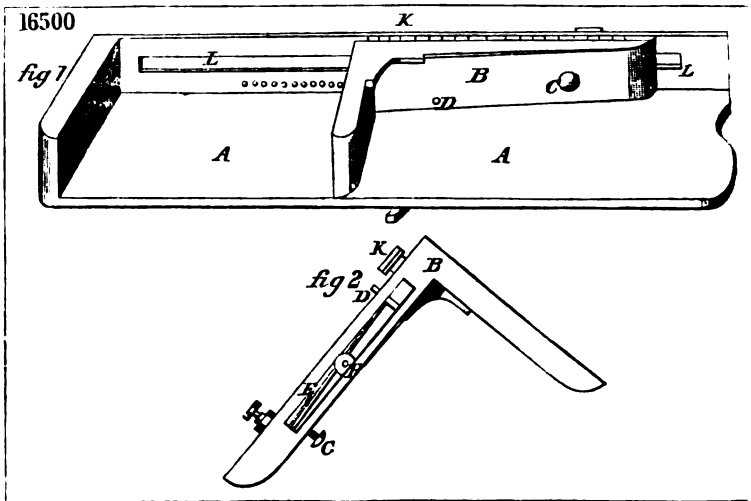

16990

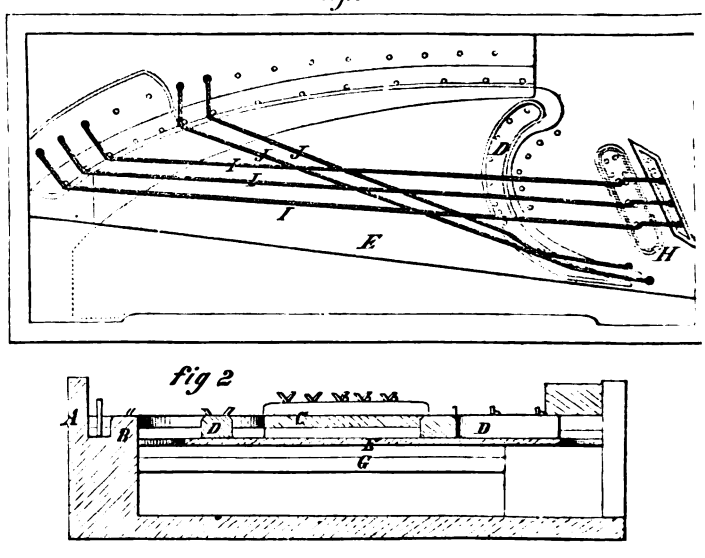

17457

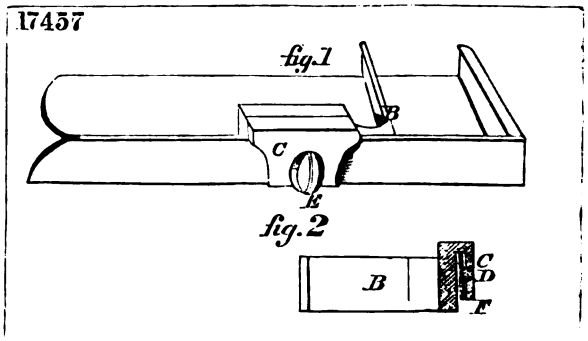

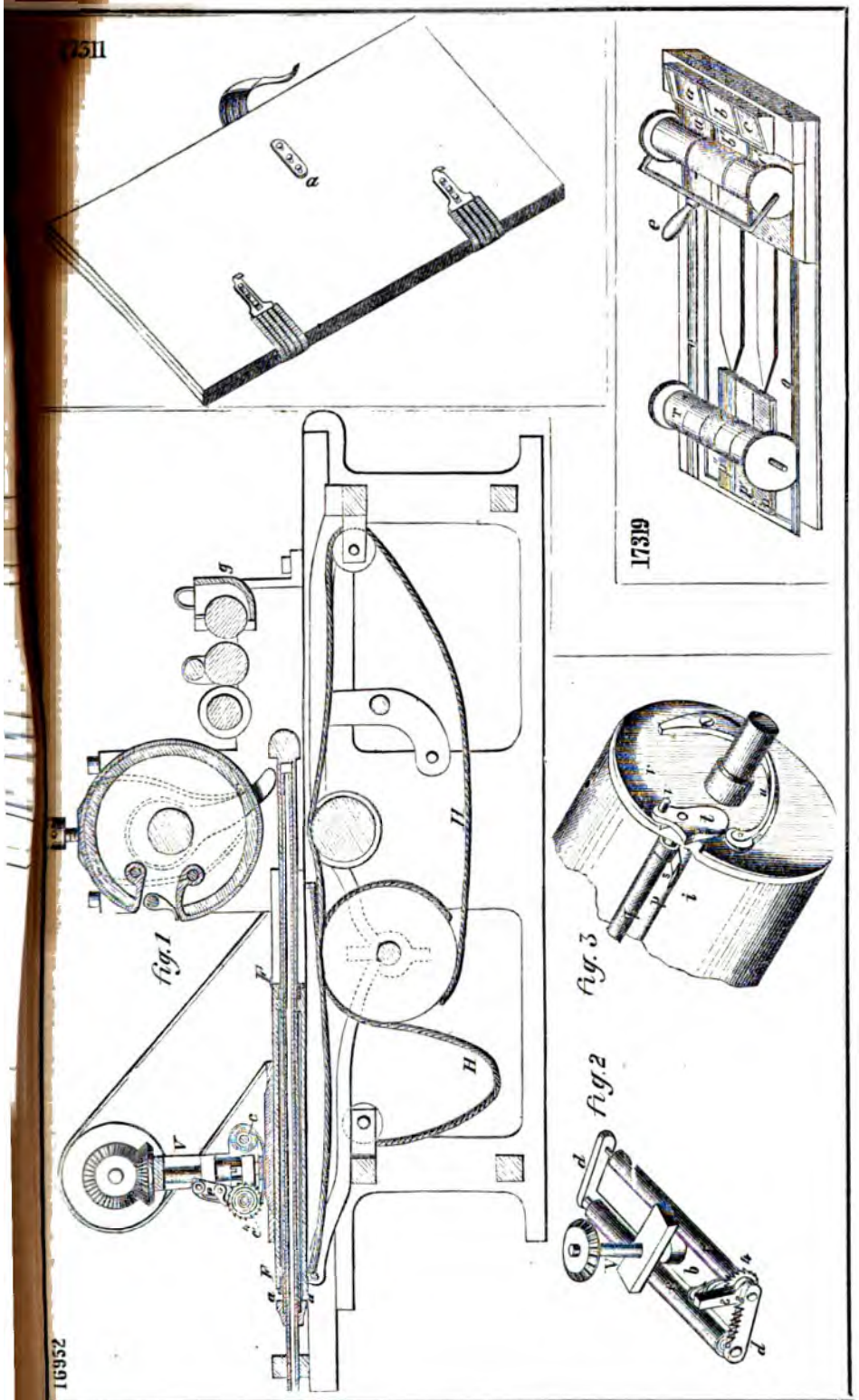
17511
17319
16952
fig.1
fig.2
fig.3

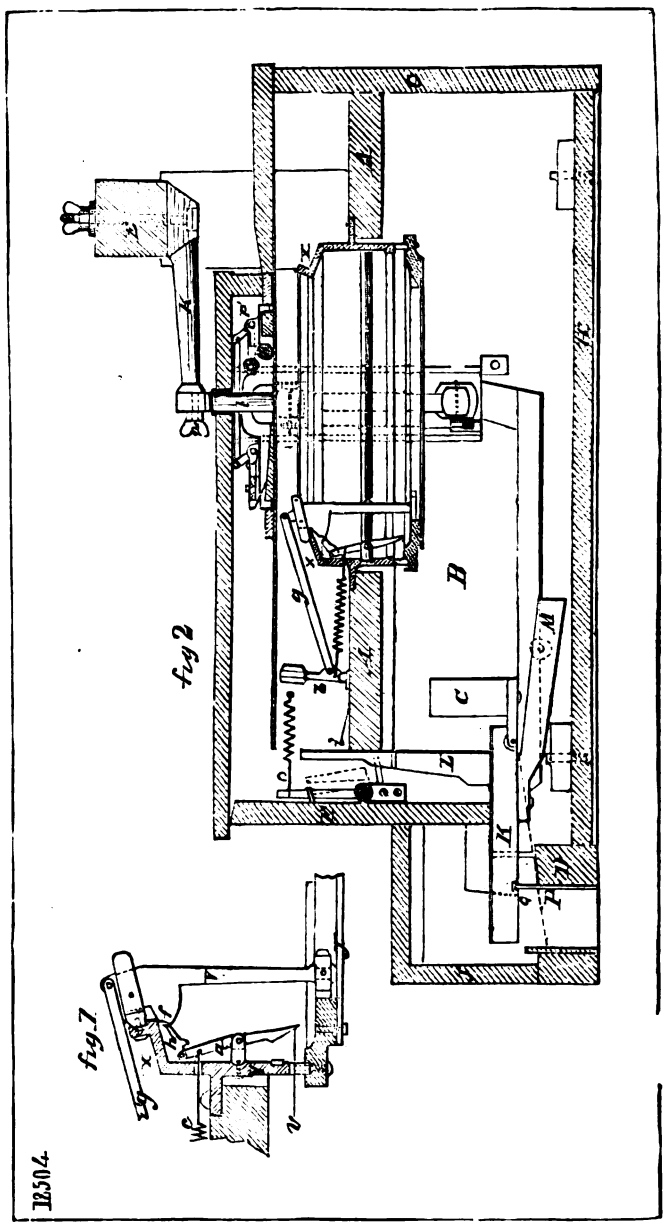
fig 2
B
fig 7
12504

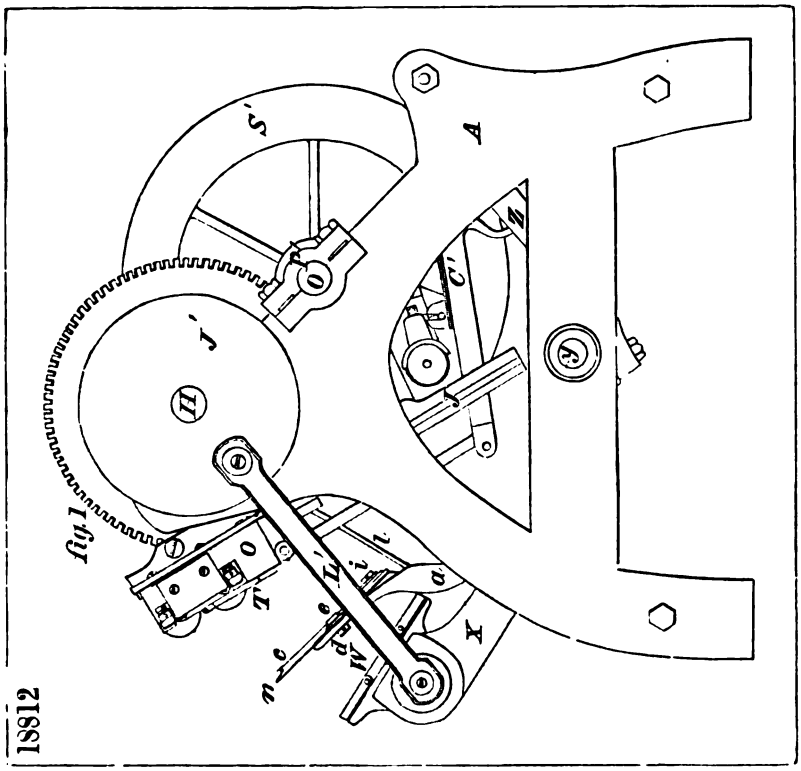
fig. 1
18812

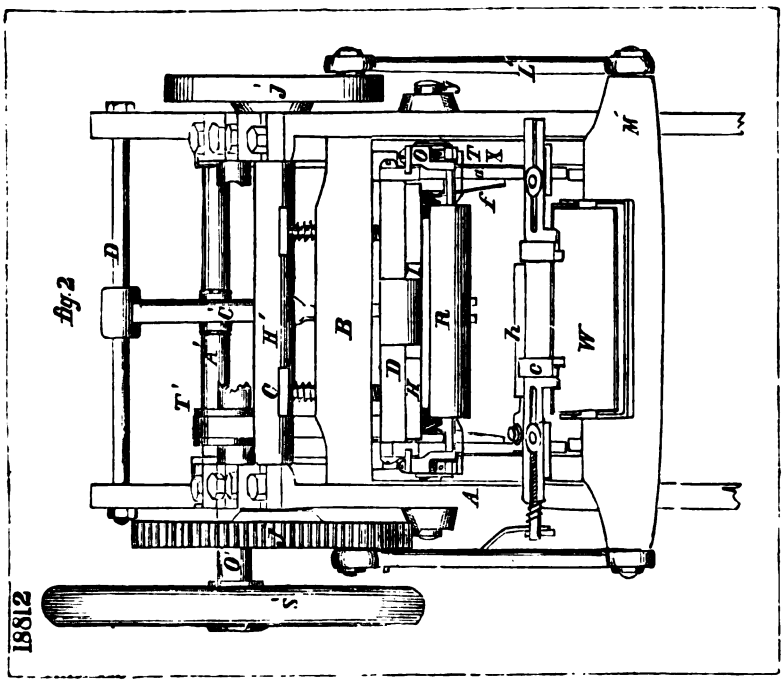
fig. 2
18812

17007

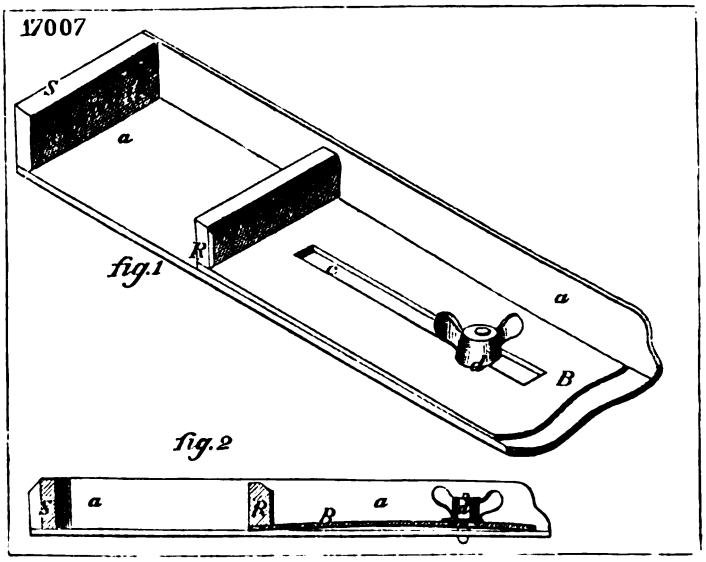

fig. 1

fig. 2

17753

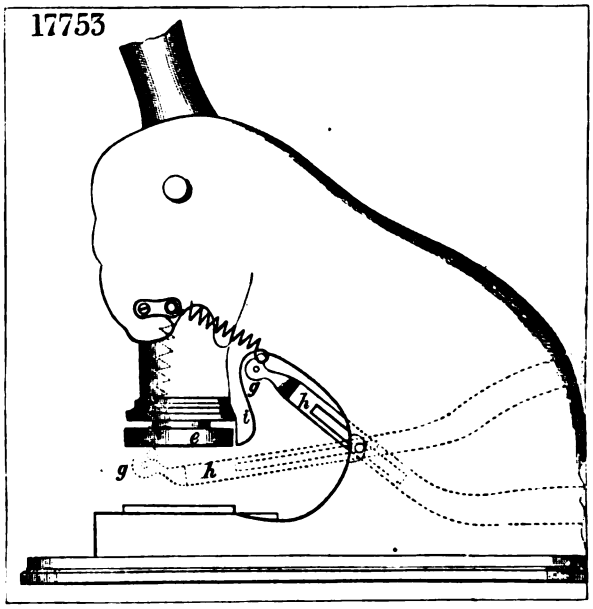

d18812

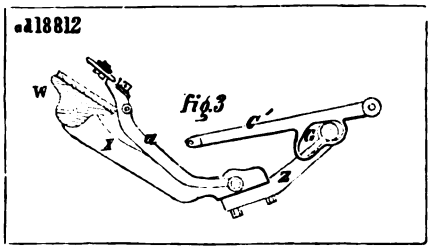

fig. 3

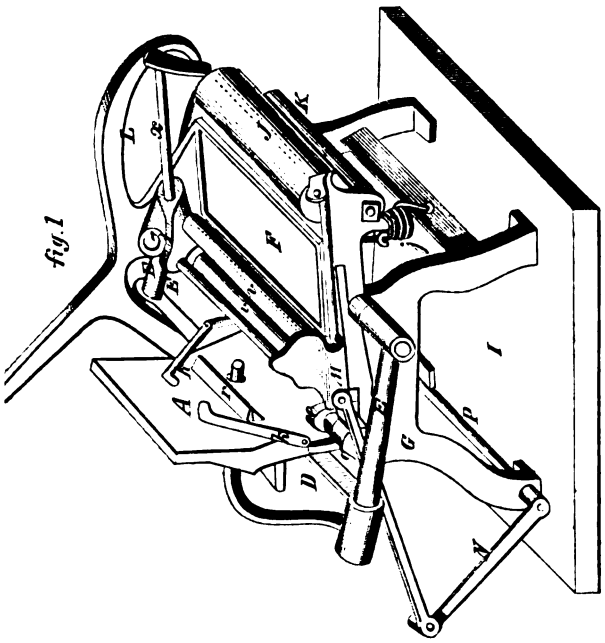

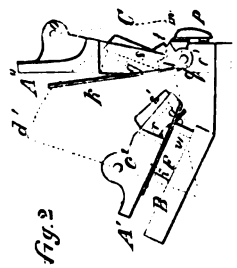

17322

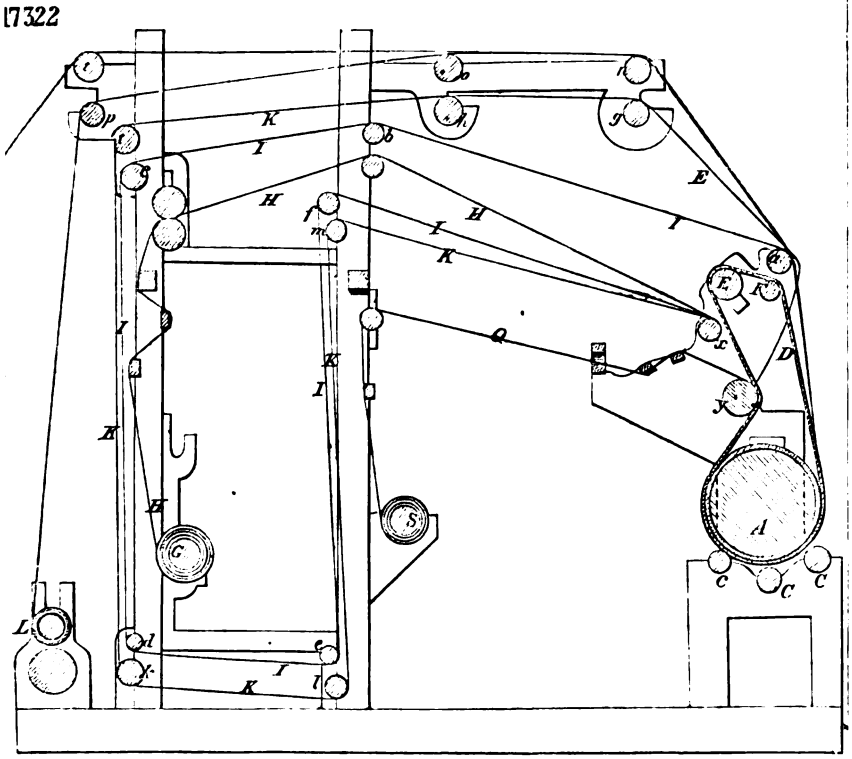

18744

fig 1

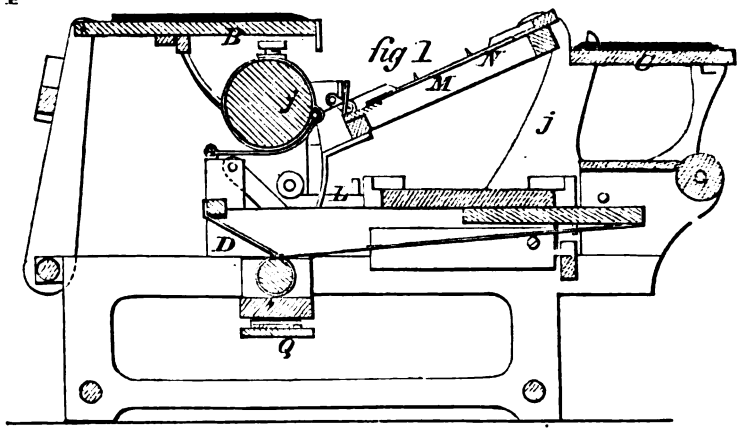

fig 2

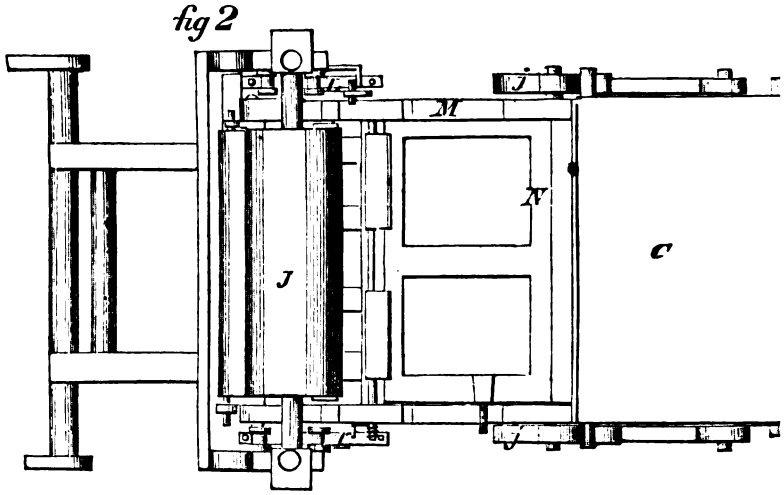

fig 3

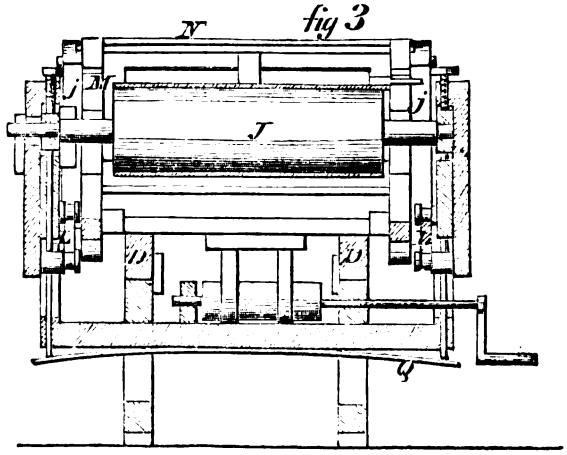

18477

fig.1

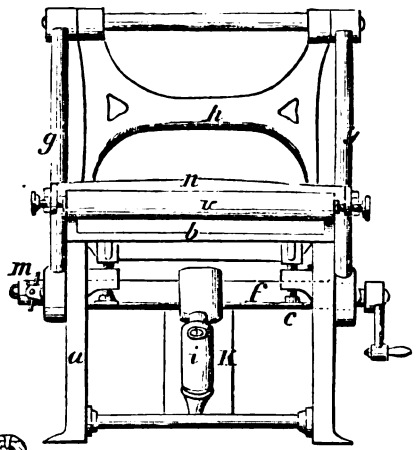

fig.2

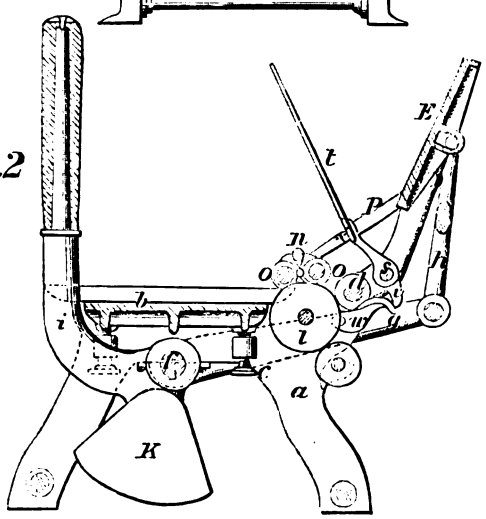

fig.3

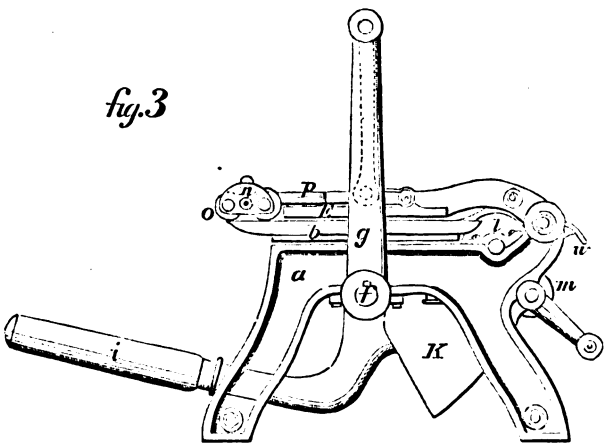

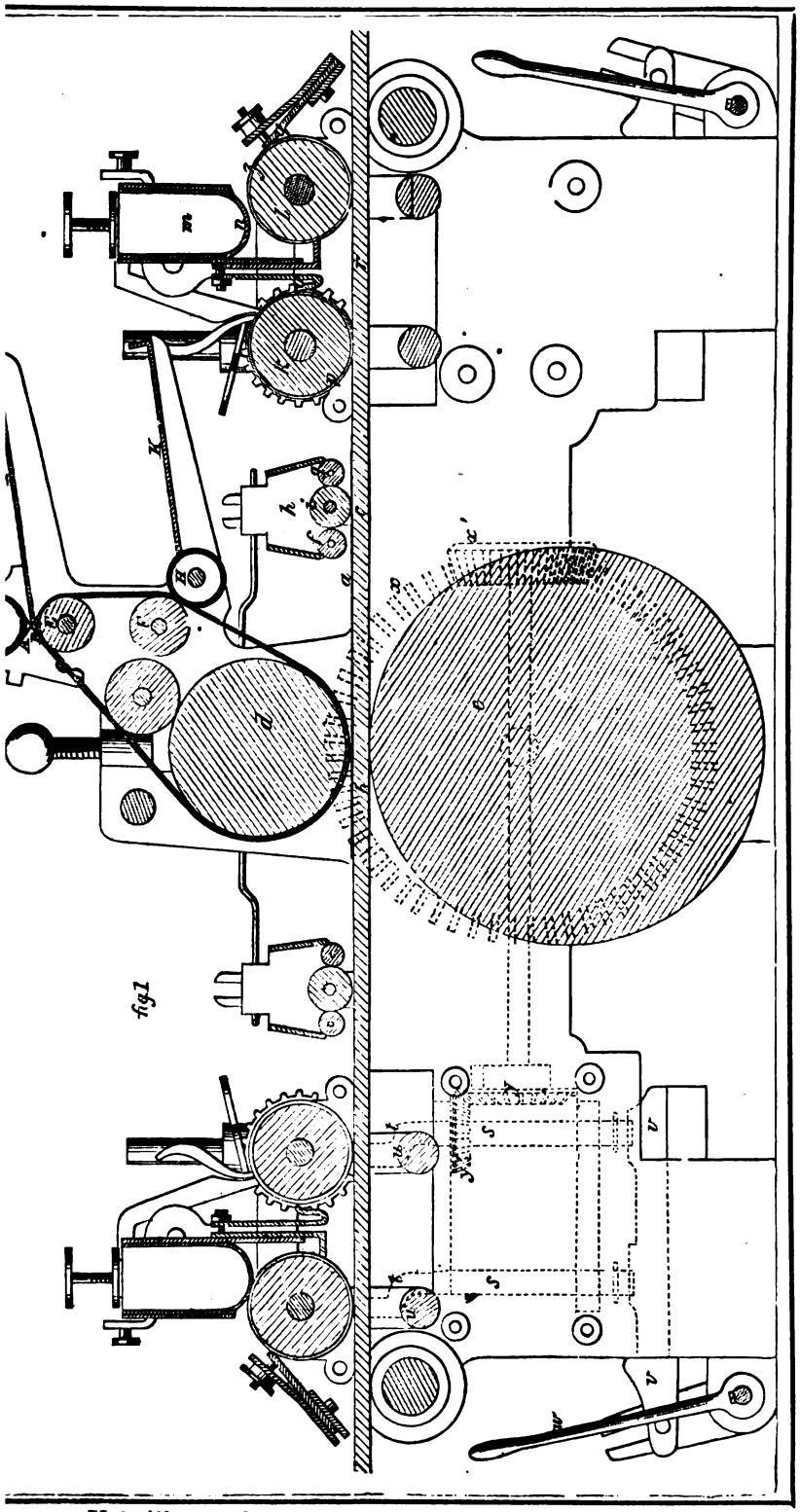

fig1

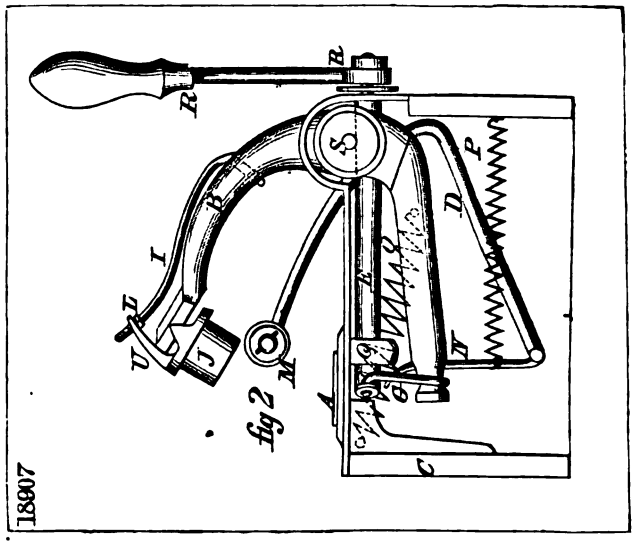

ad17036

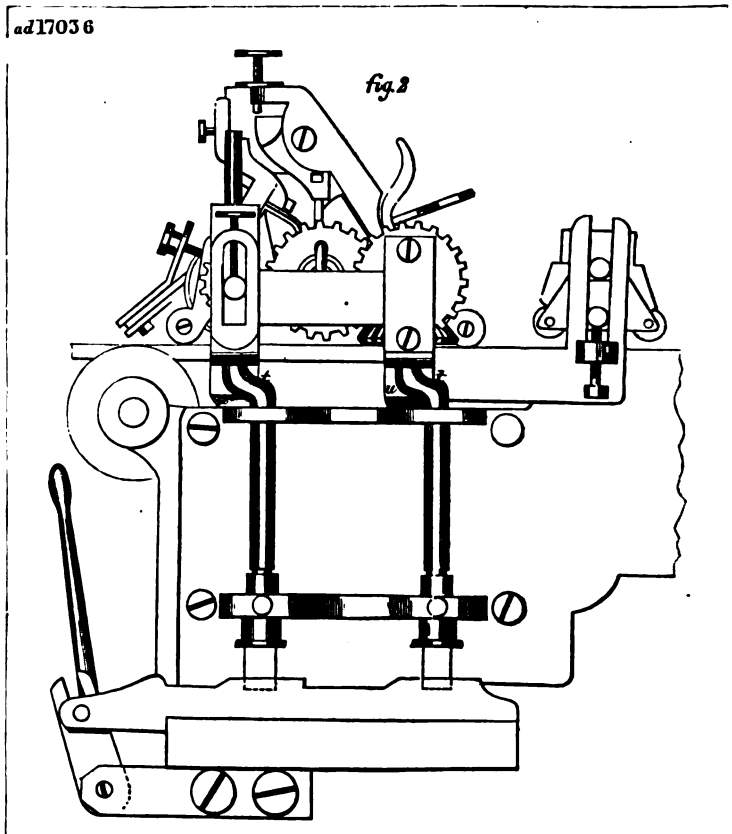

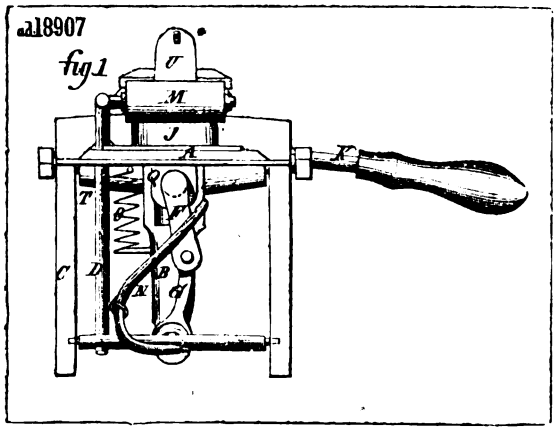
a.d.18907
fig 1
U
M
J
A
K
T
C
D
B
N
G

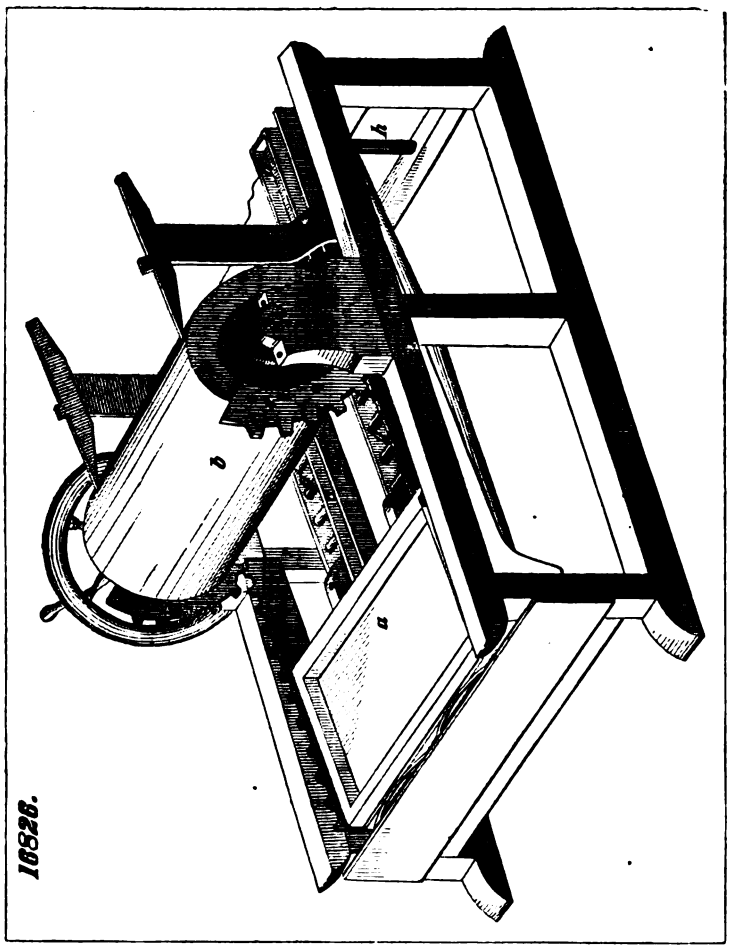
16826.
h
b
a

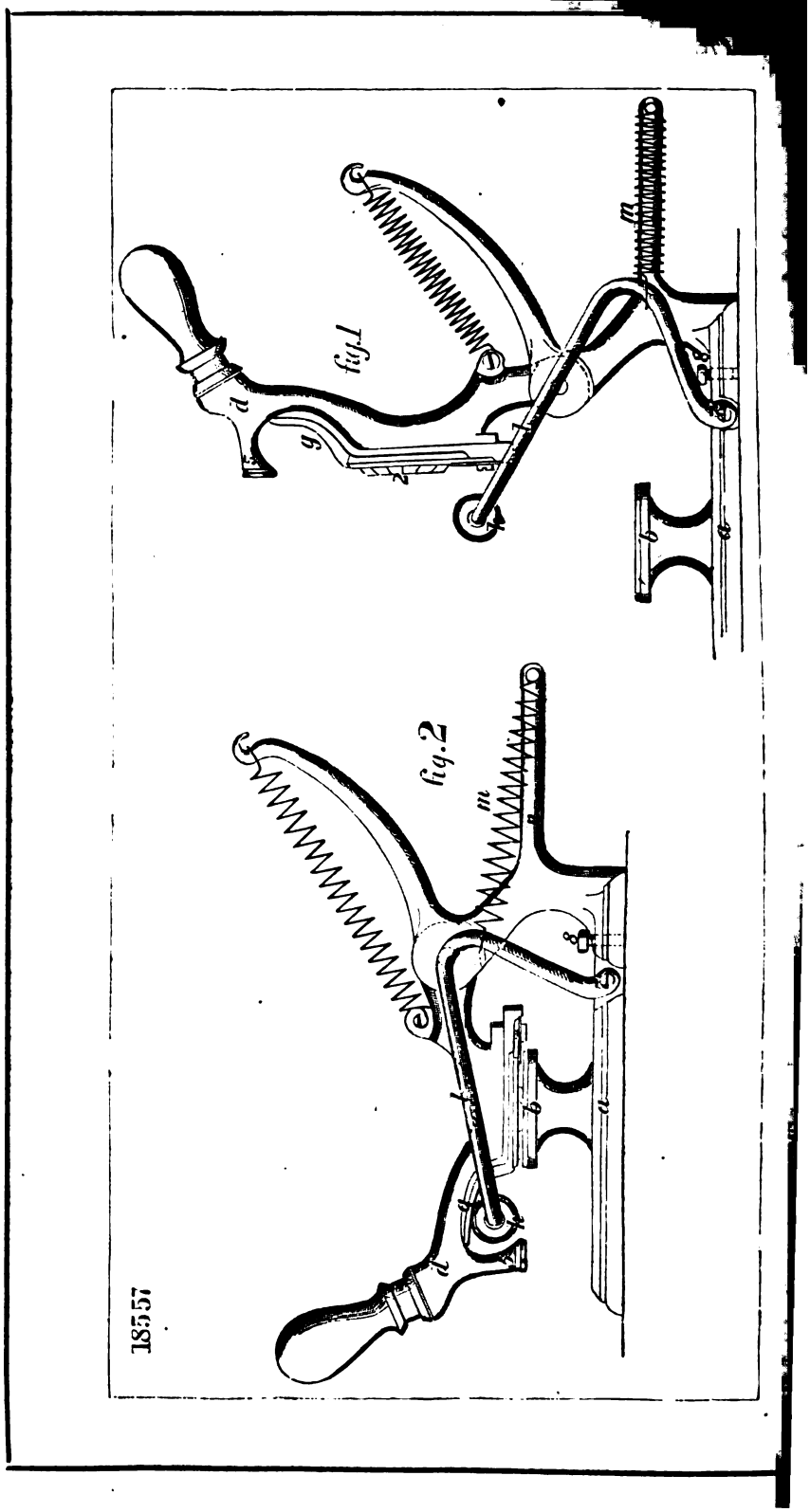
1857
fig.2
fig.1

17615

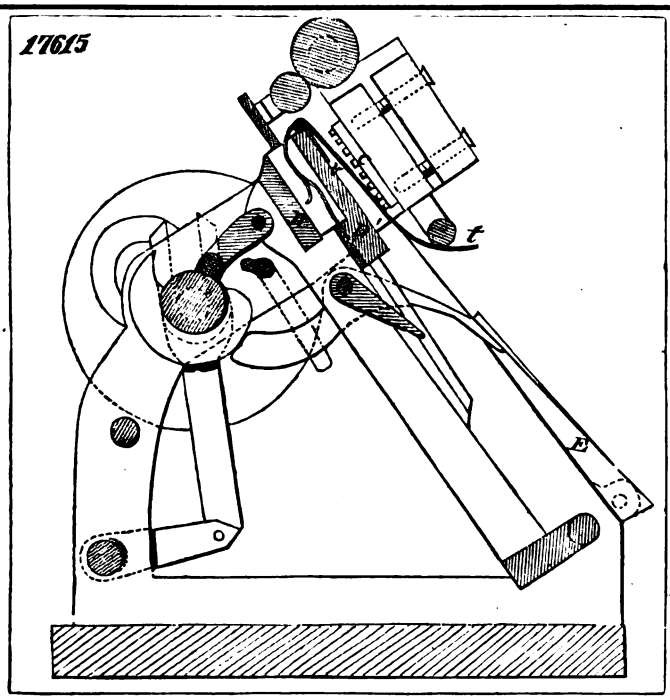

17418

fig1

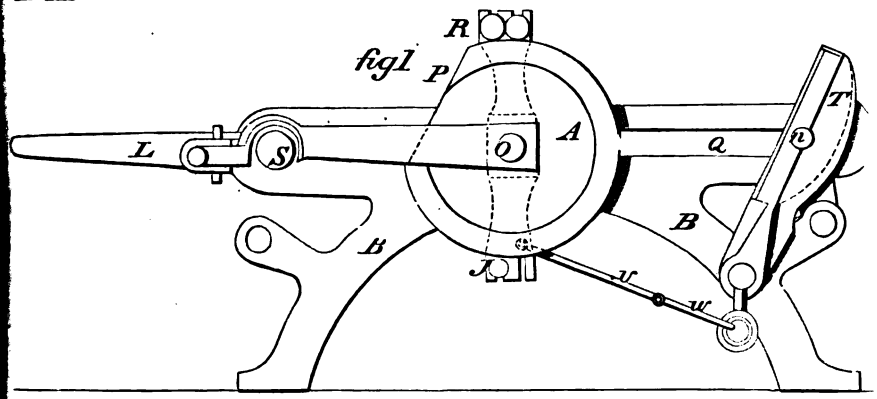

fig2

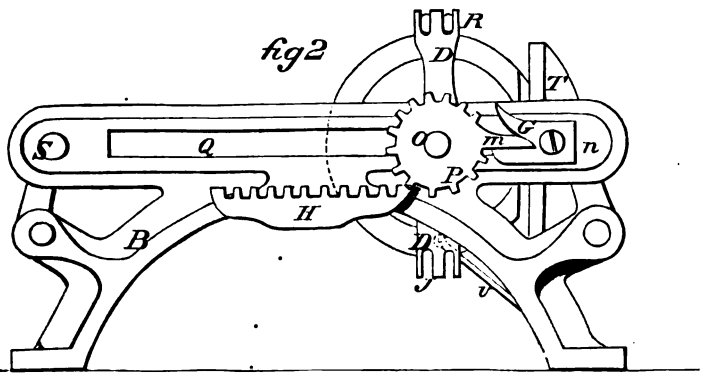

18032

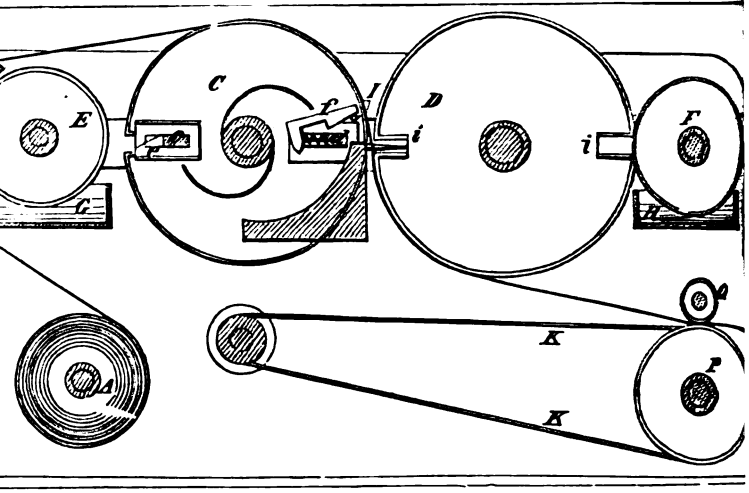

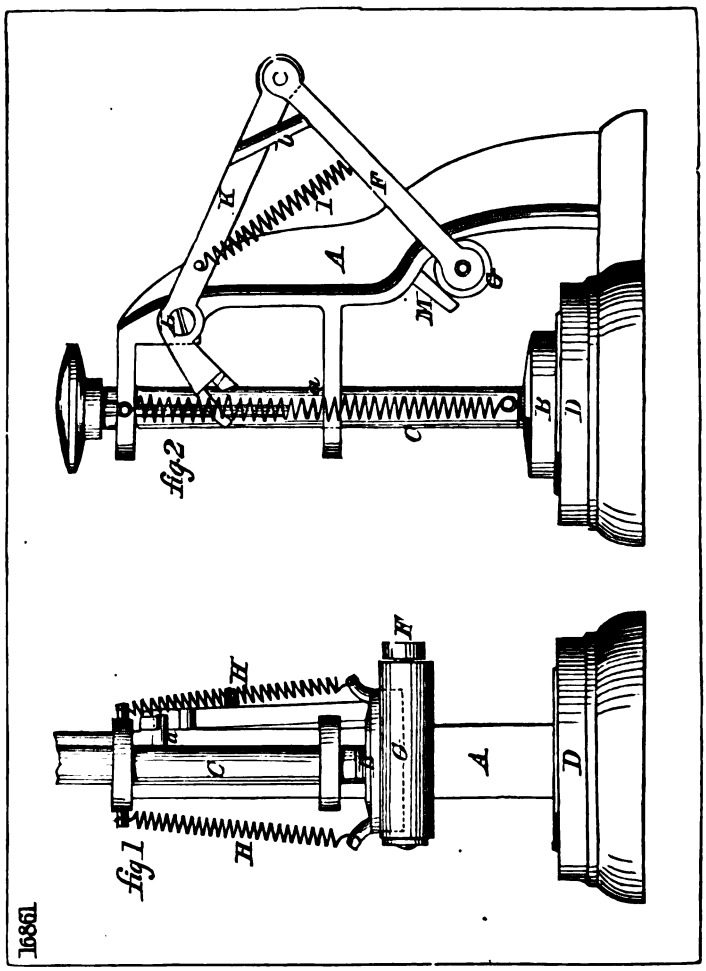

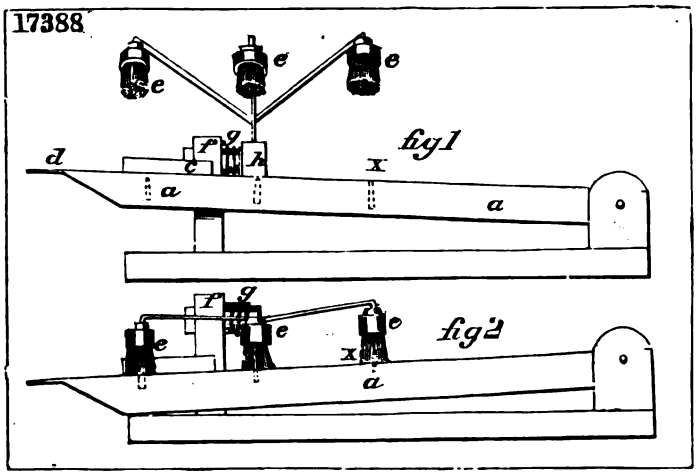
17388
fig1
fig2

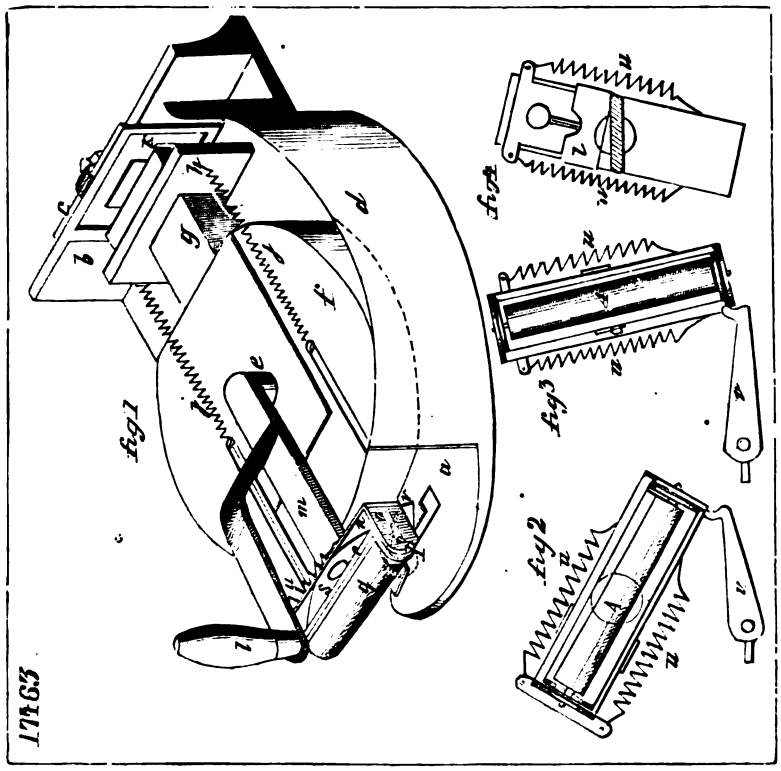
17463
fig1
fig2
fig3
fig4

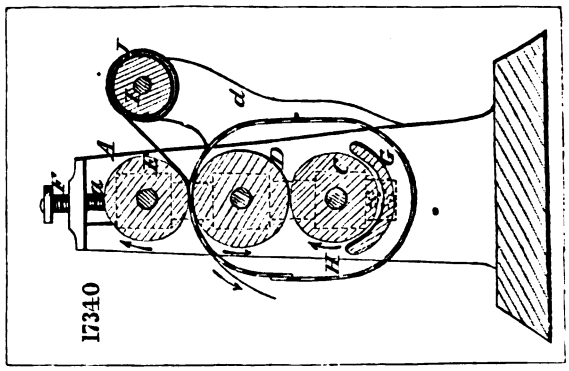
17340

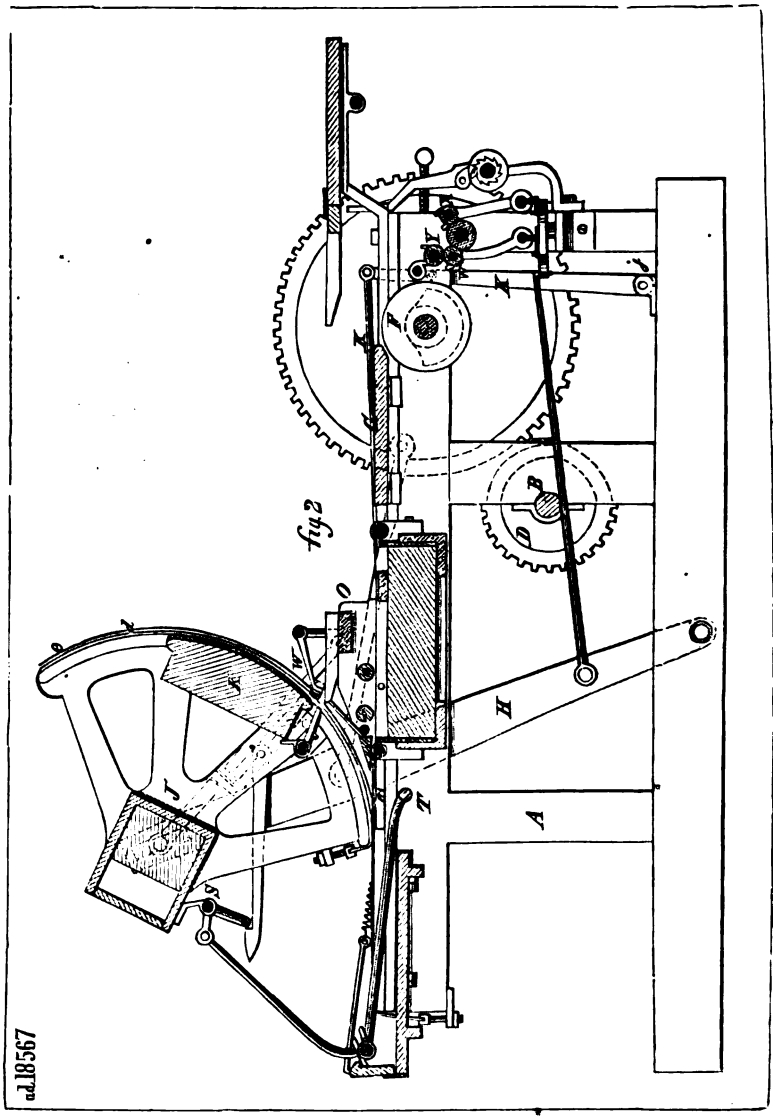
fig 2
ad.18567

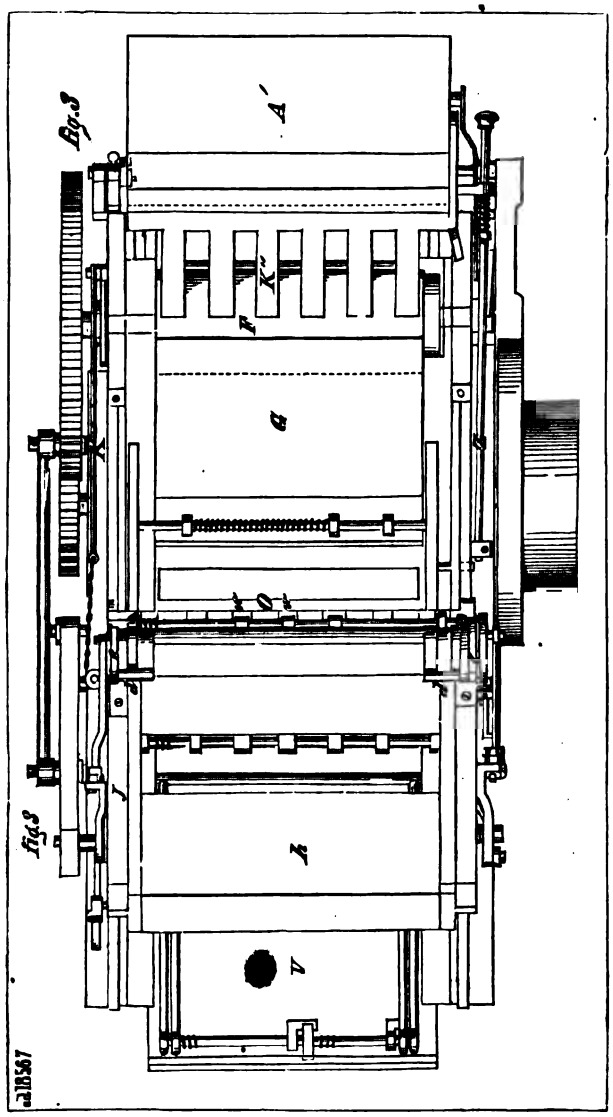
Fig. 3
A'
K''
F
G
O
J
h
V
Fig. 3
18567

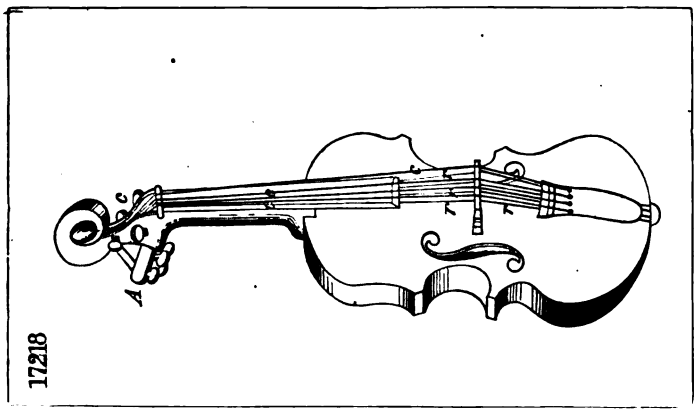
A
17218

16811

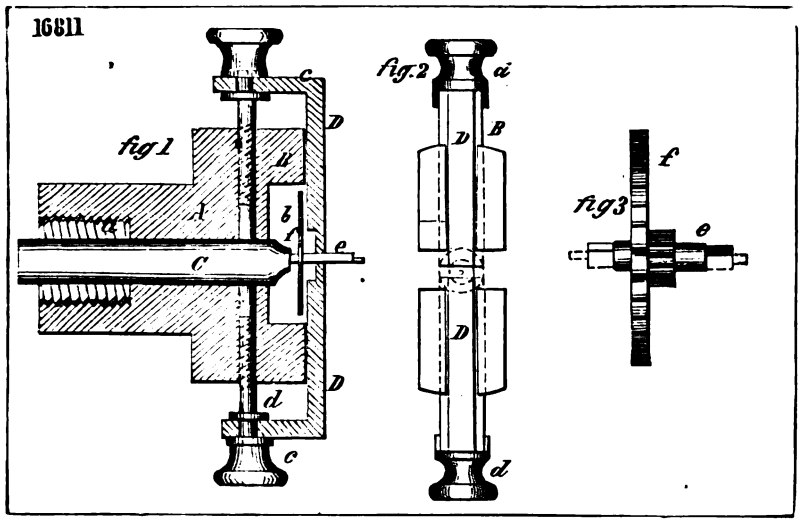

18545

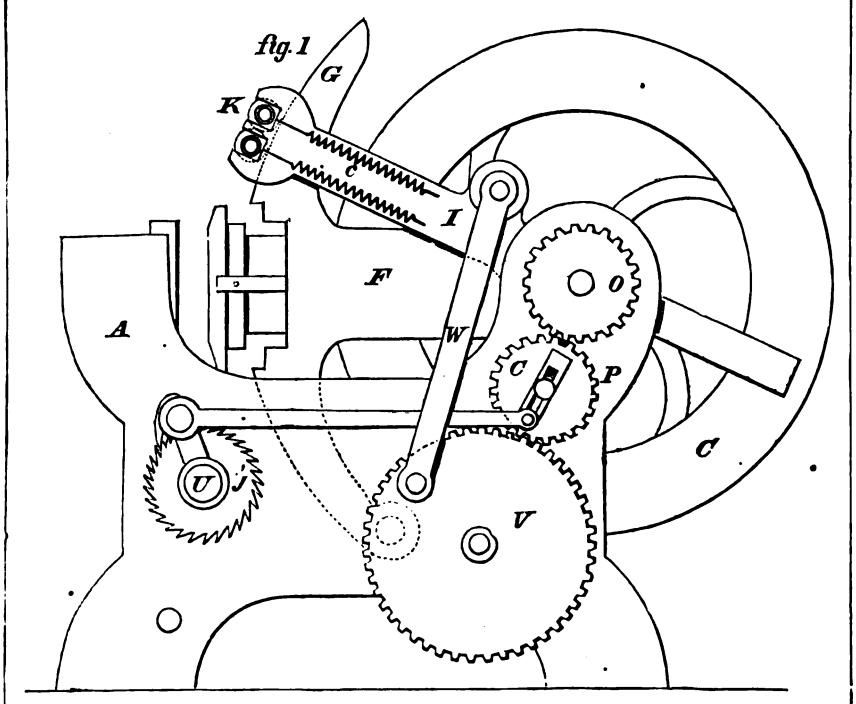

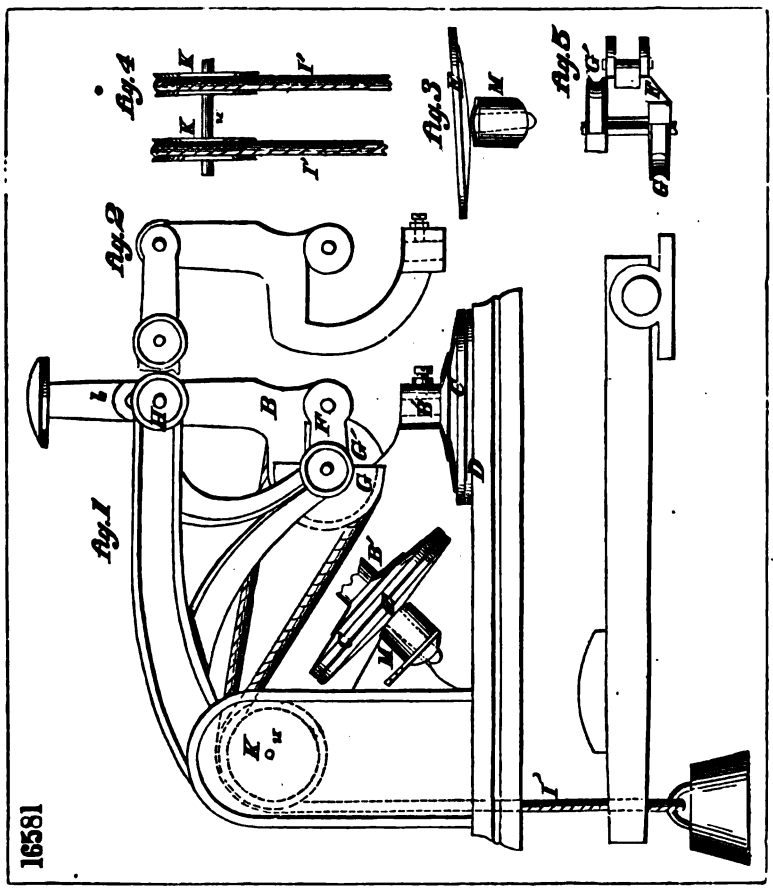
16581
Fig.1
Fig.2
Fig.3
Fig.4
Fig.5

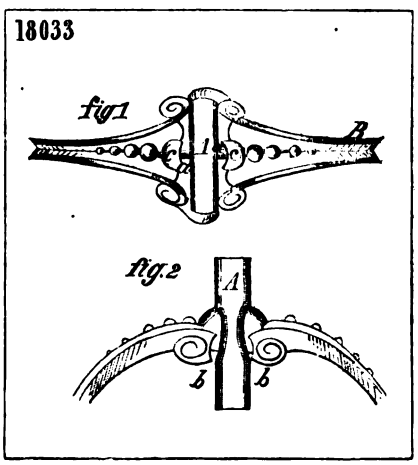
18033
fig.1
fig.2

1754.

fig. 1

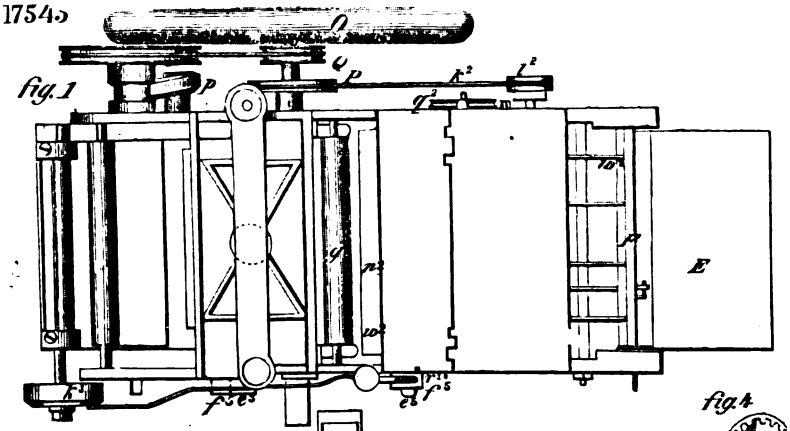

fig. 2

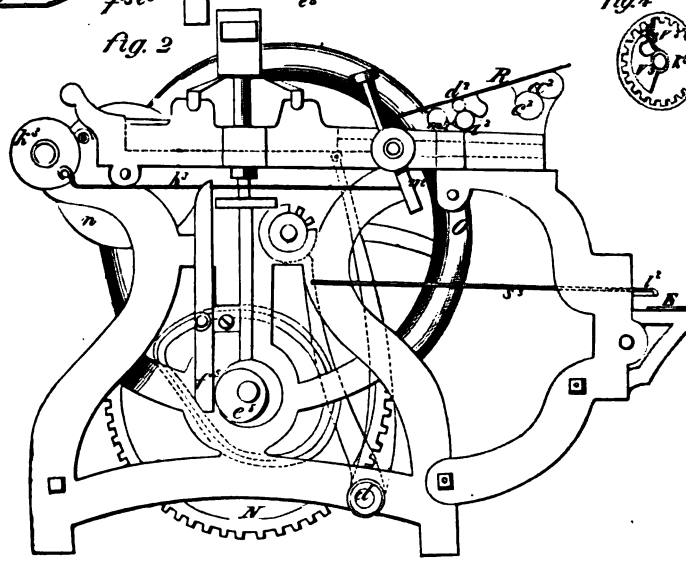

fig. 4

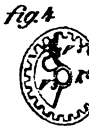

fig. 3

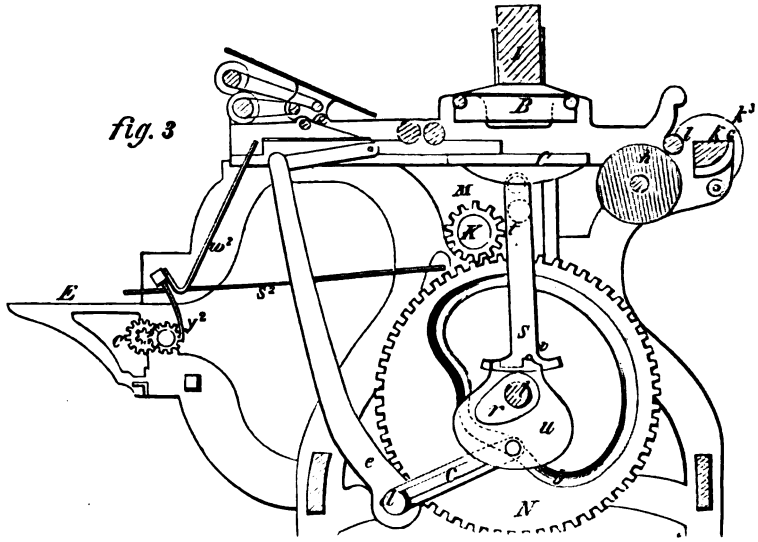

16856

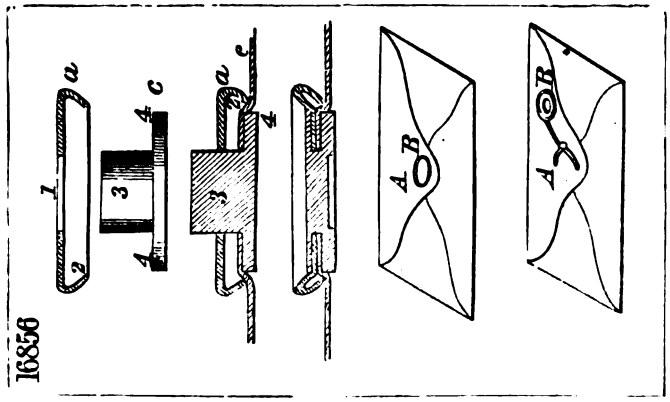

17449

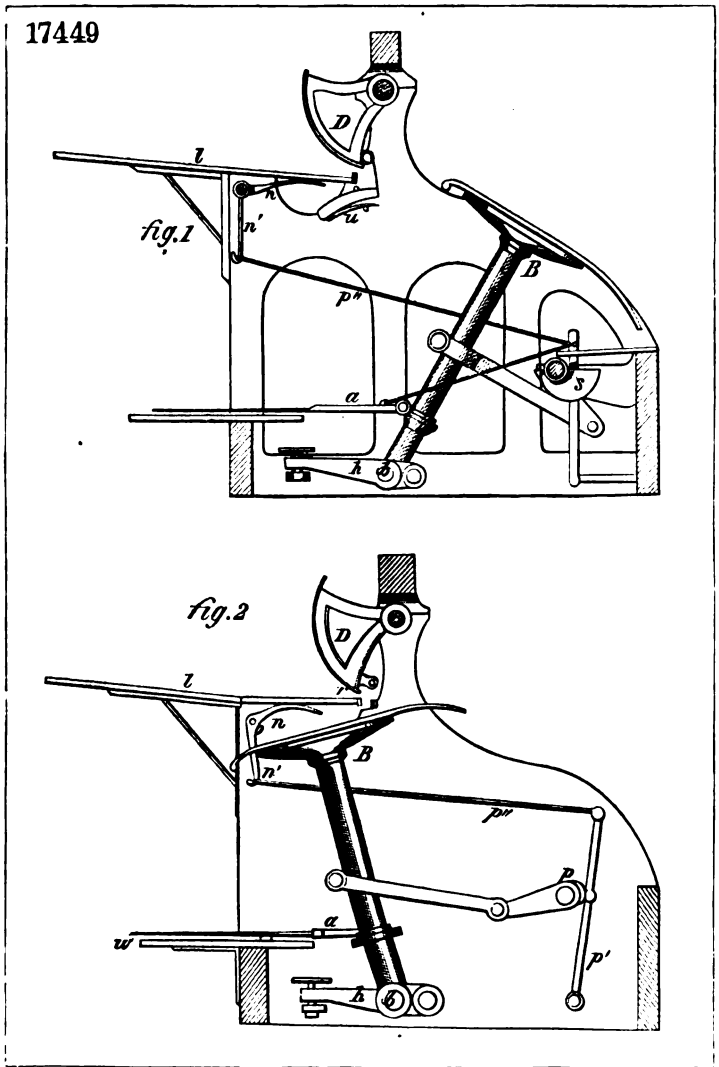

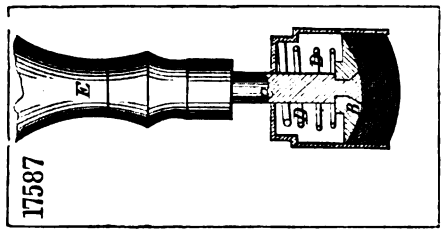
17587

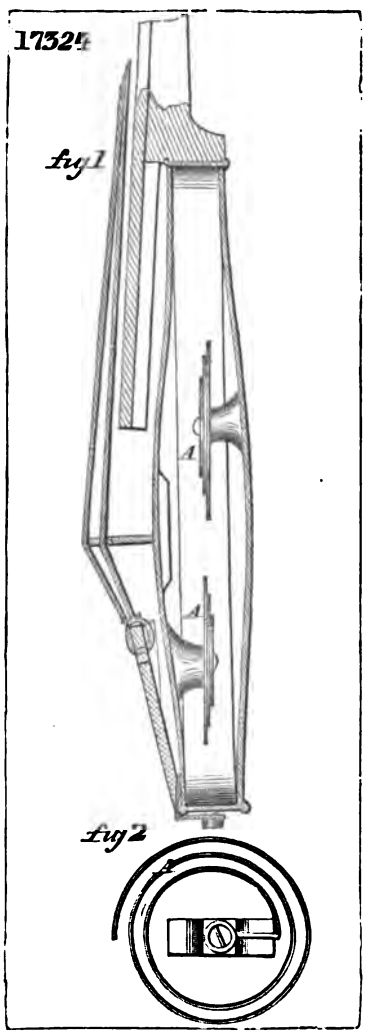
17324
fig 1
fig 2

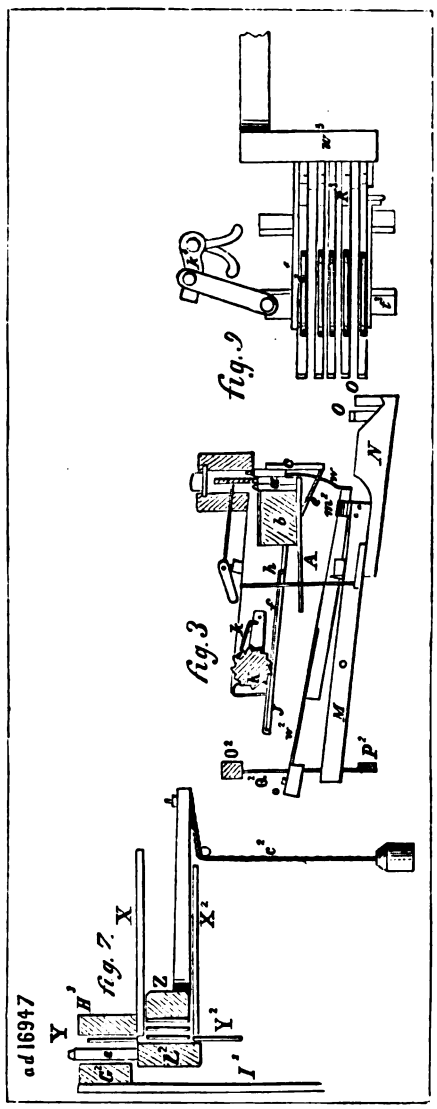
fig. 3
fig. 7
ad 16947

16641

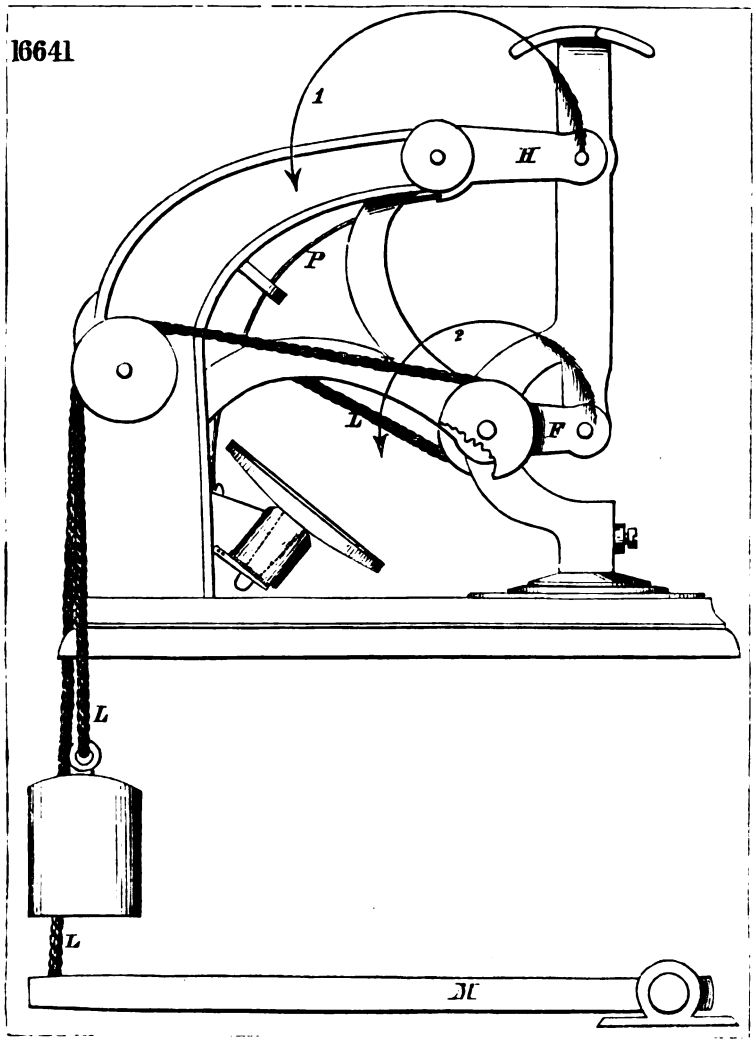

16962

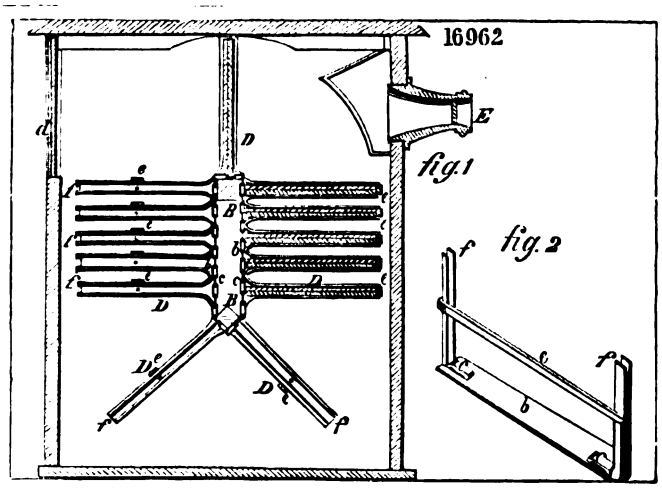

17549

fig.1

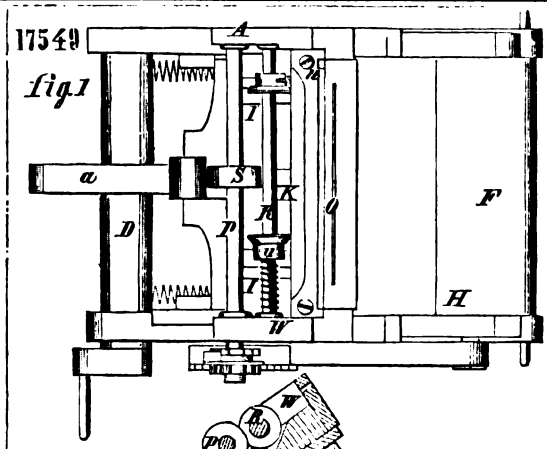

fig.2

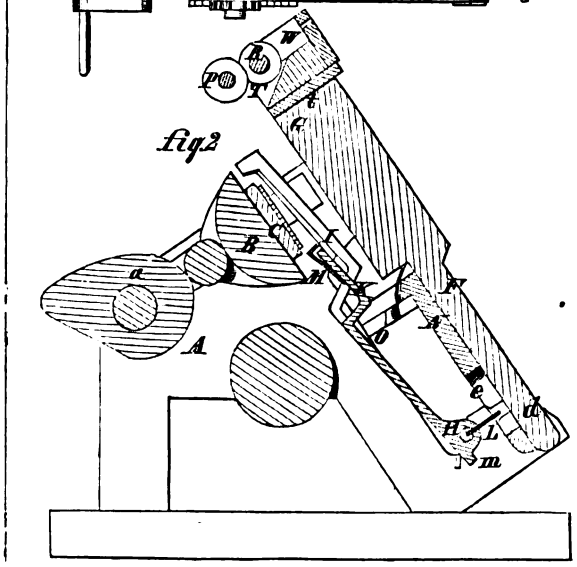

16712

fig.3

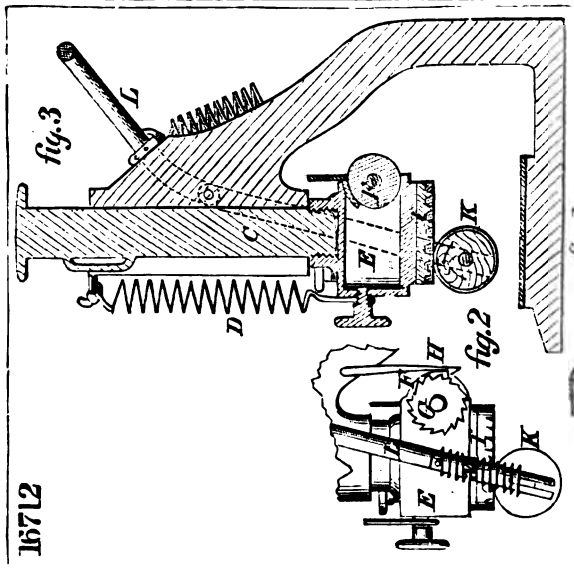

fig.2

fig.1

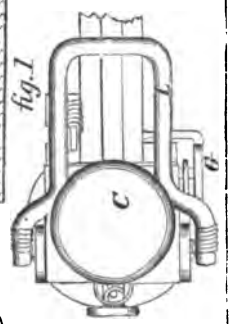

18065

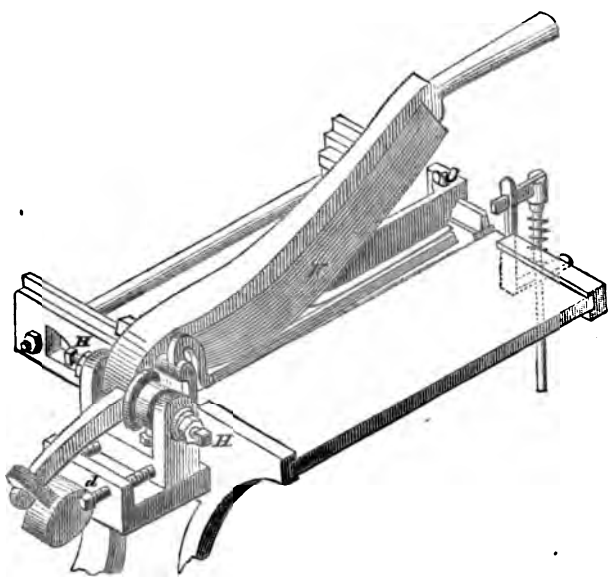

17824

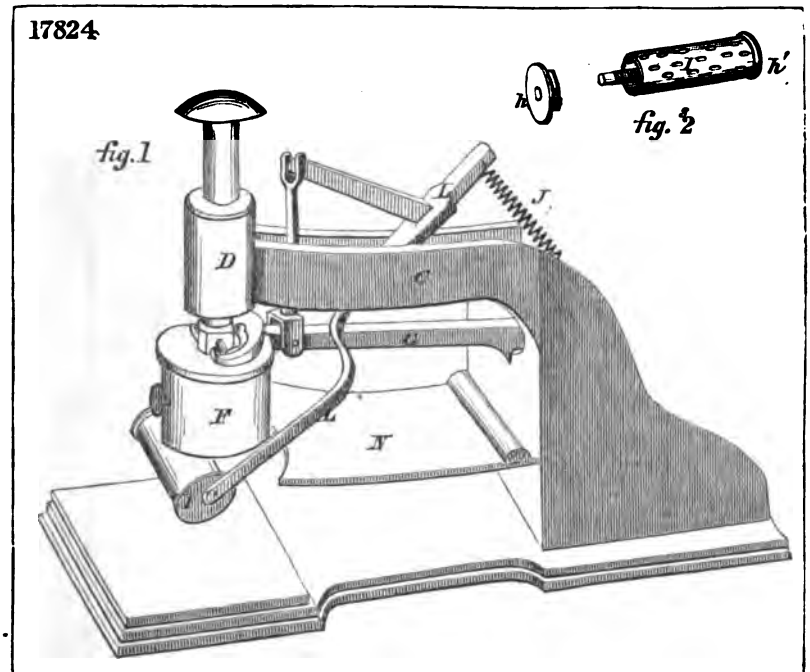

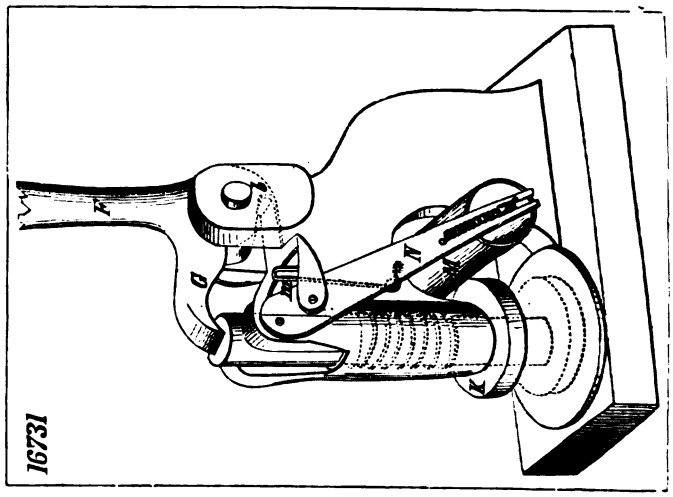

16731

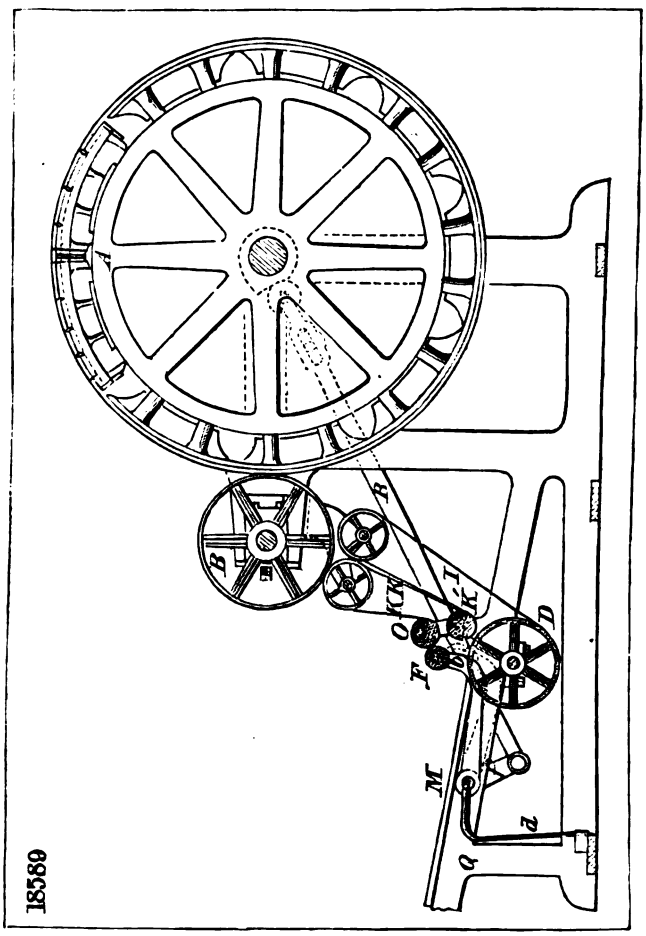

18589

17239

fig 1

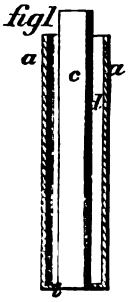

fig 2

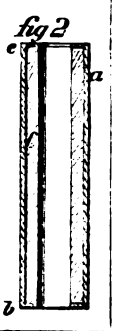

17057

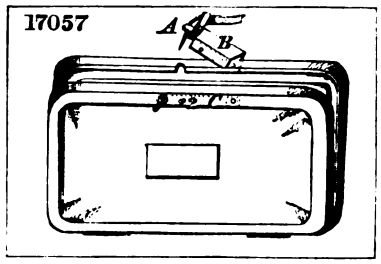

4

fig 1

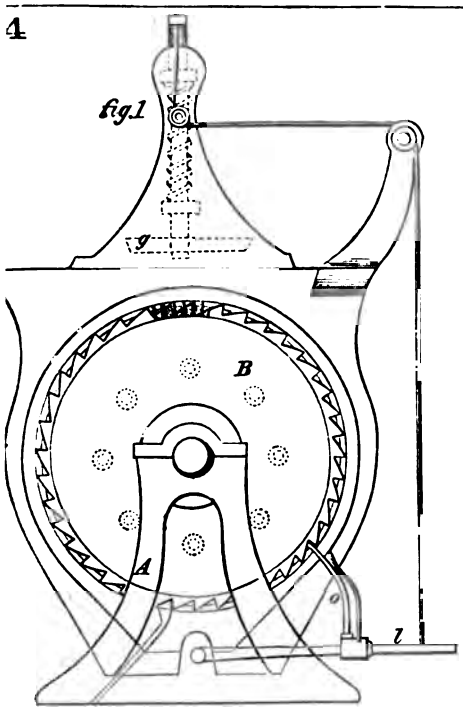

fig 2

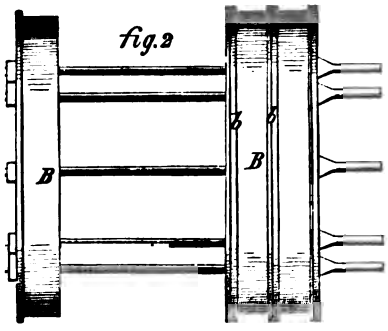

fig 4

fig 3

fig 2

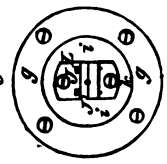

fig 1

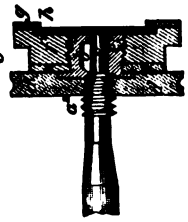

18213

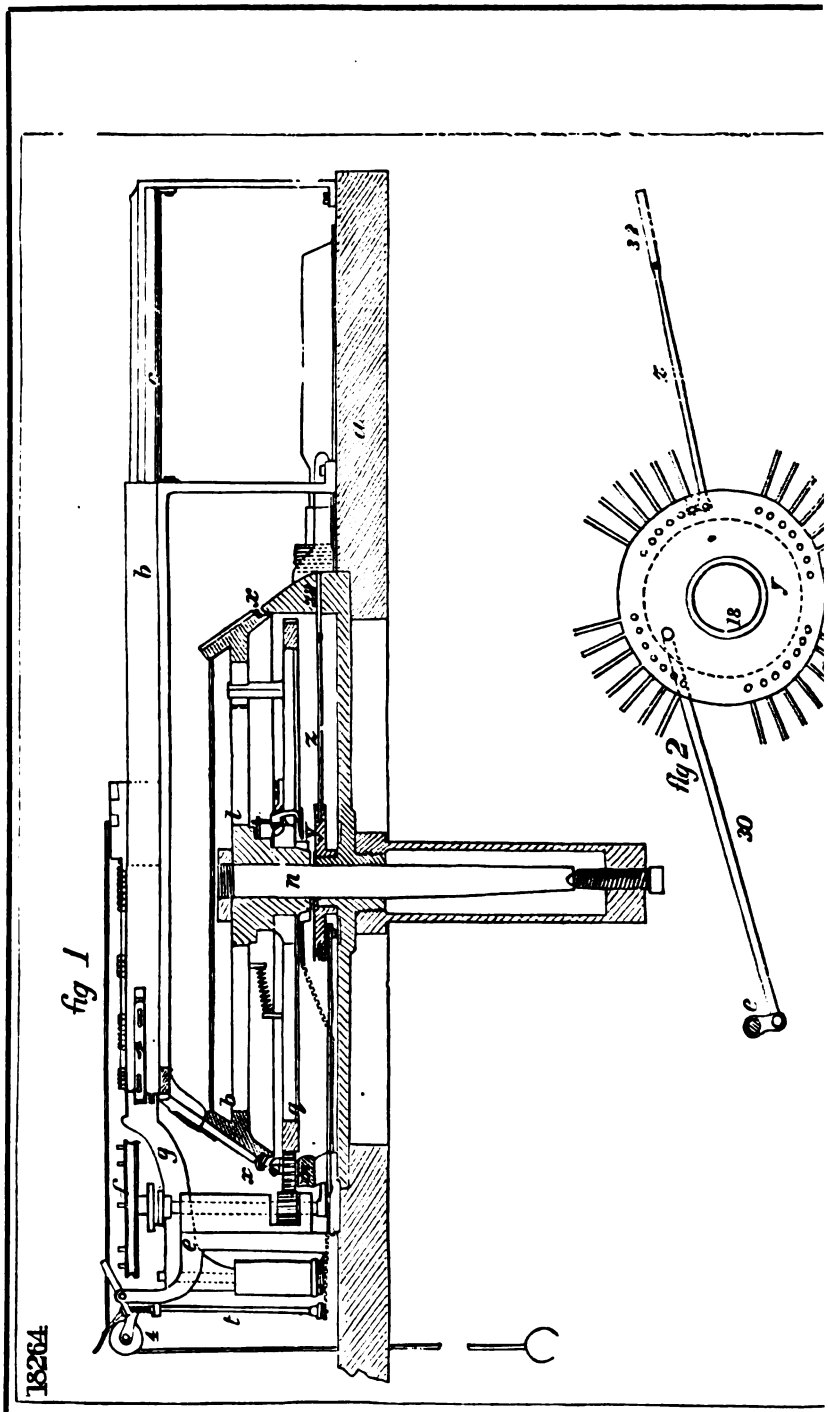
fig 1
fig 2
18264

16608

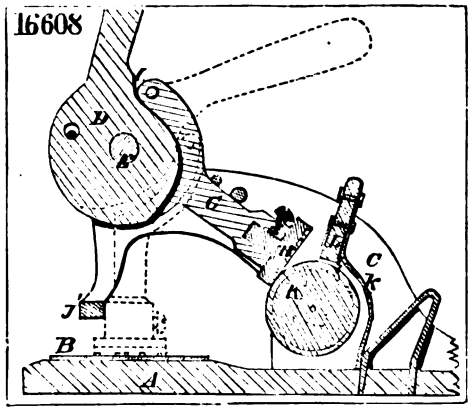

16837

fig.1

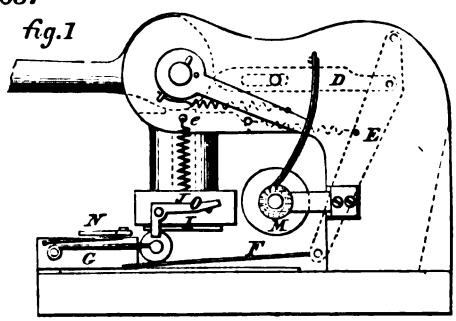

fig.2

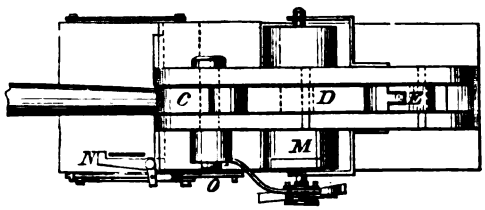

fig.3

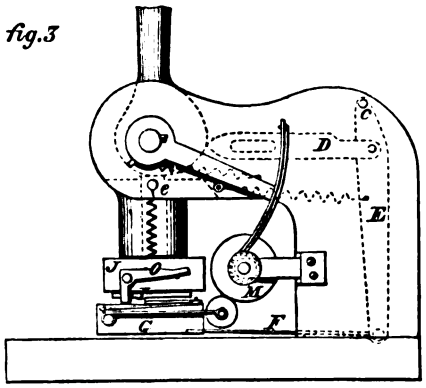

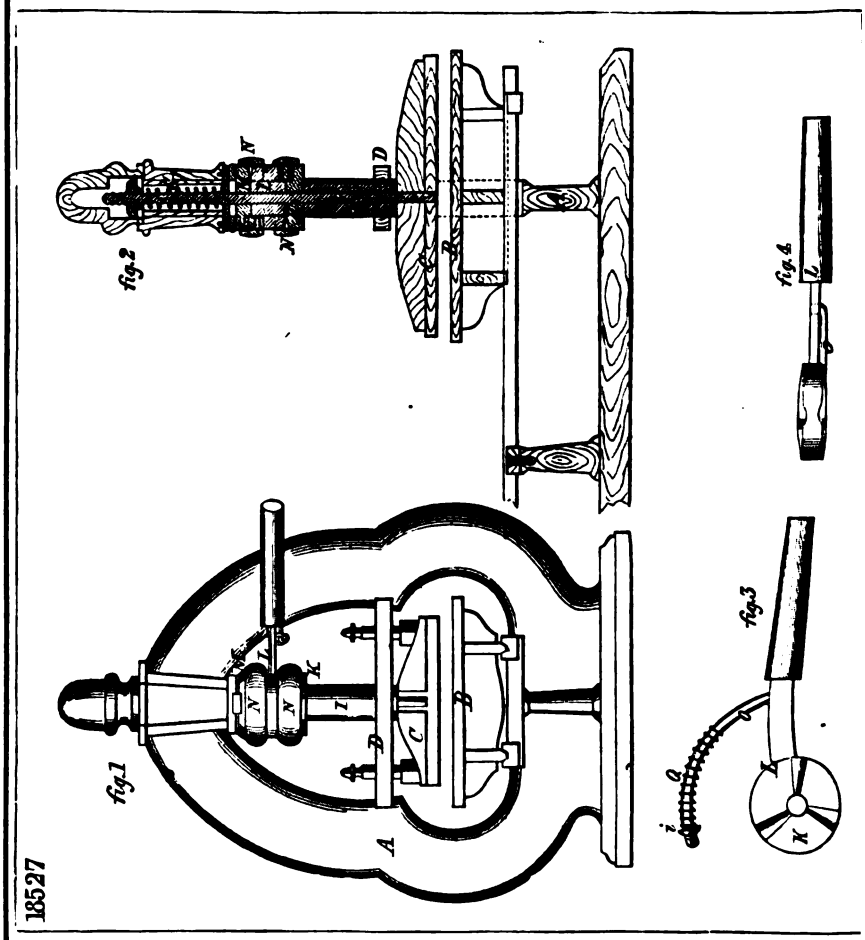
18527
fig.1
fig.2
fig.3
fig.4
A
B
C
D
N
K
L
I
i
Q

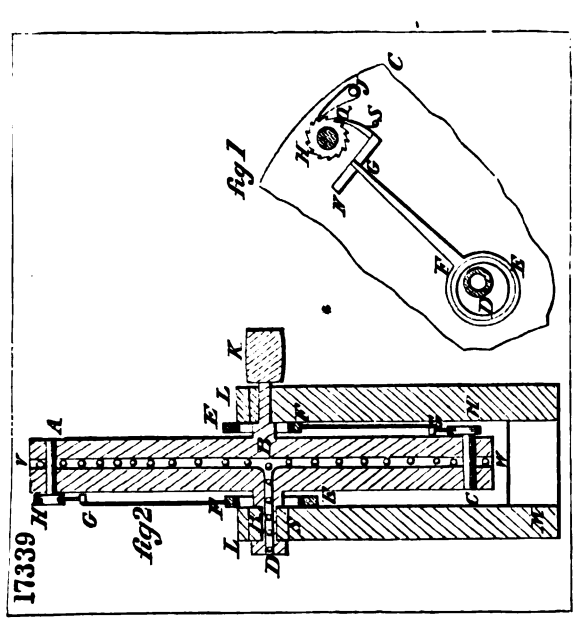
17339
fig 1
fig 2

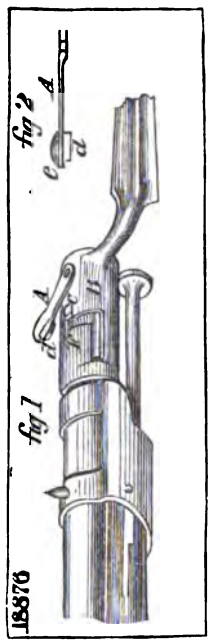
18876
fig 1
fig 2

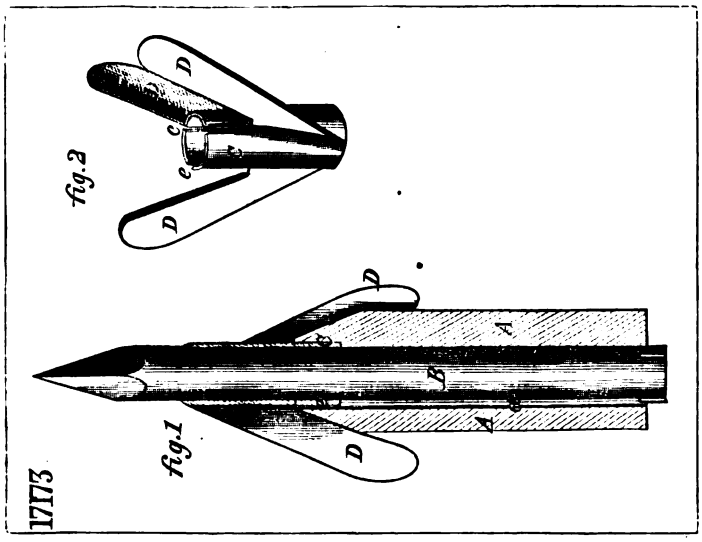
17173
fig 1
fig 2

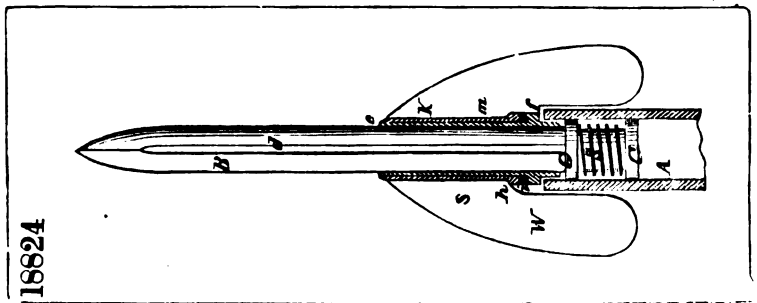
18824

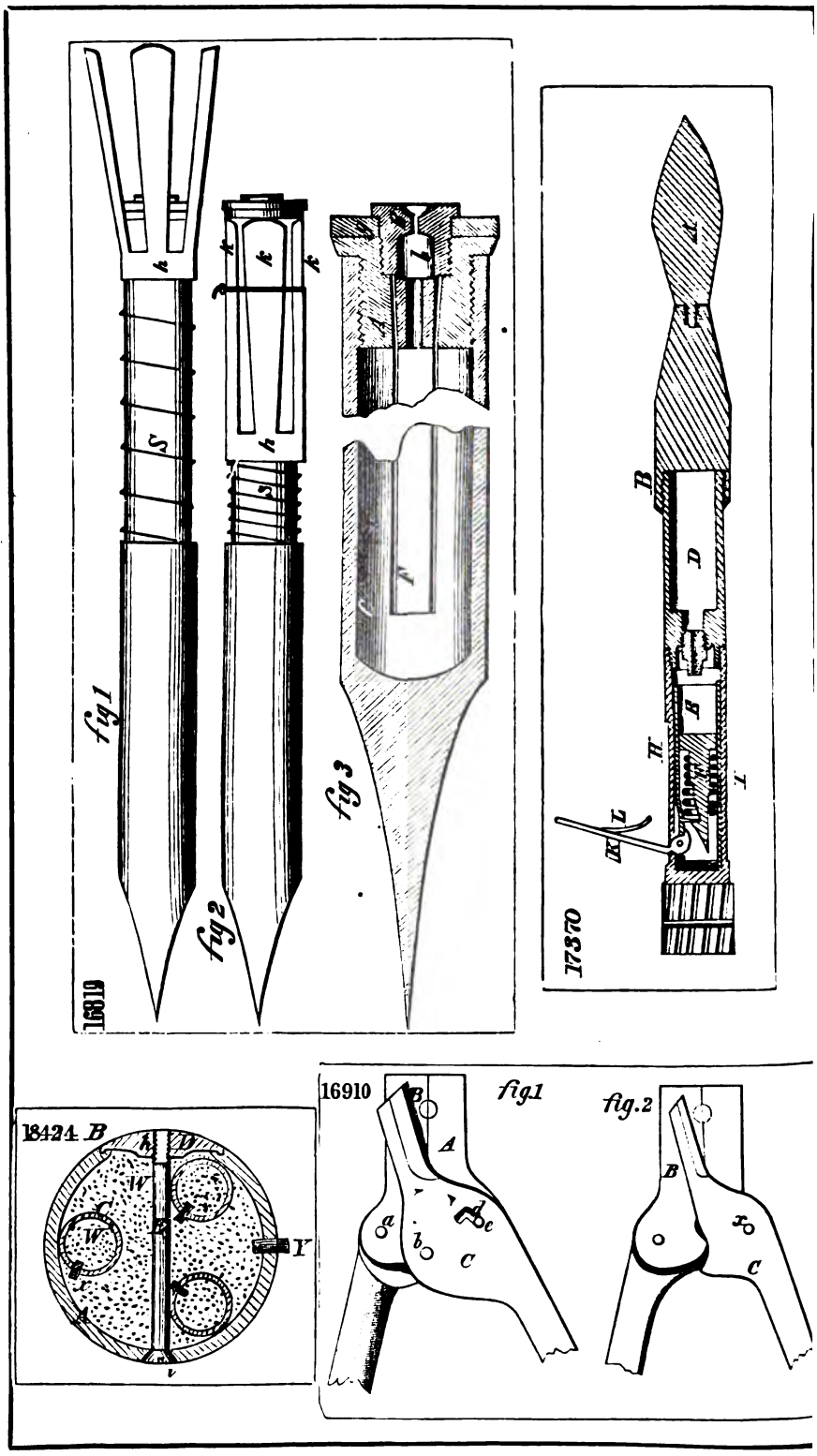
16819
fig 1
fig 2
fig 3
17370
18424 B
16910
fig 1
fig 2

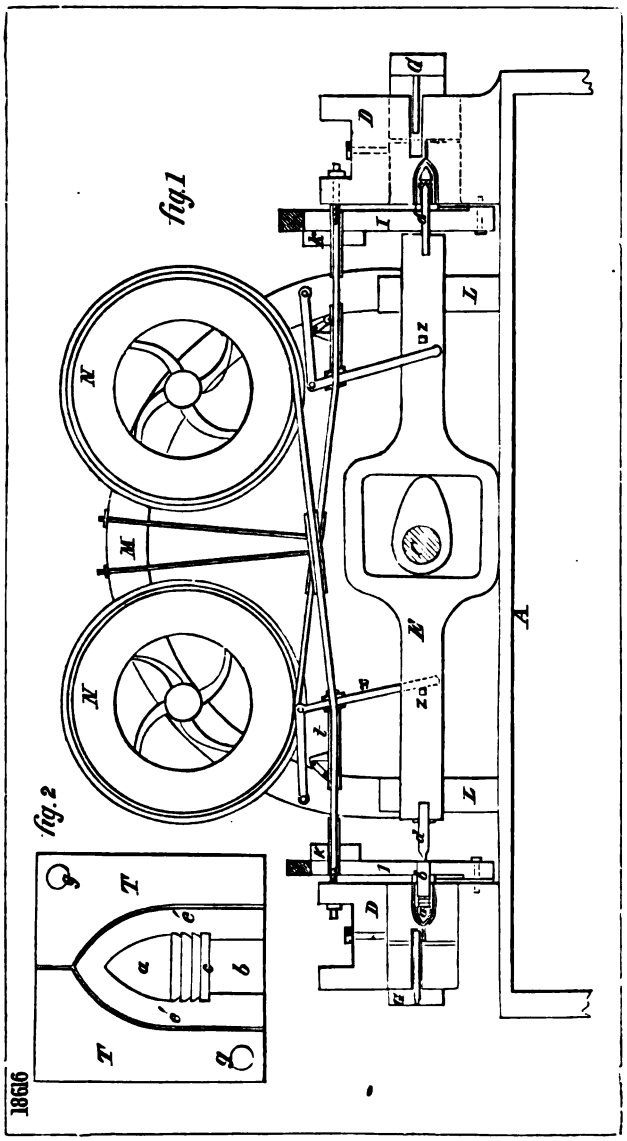
fig.1
fig.2
18616

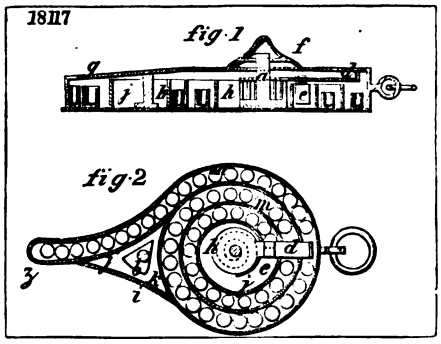
18117
fig.1
fig.2

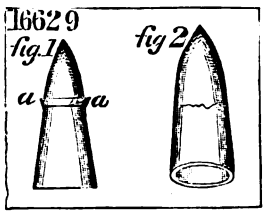
16629
fig.1
fig.2

16327

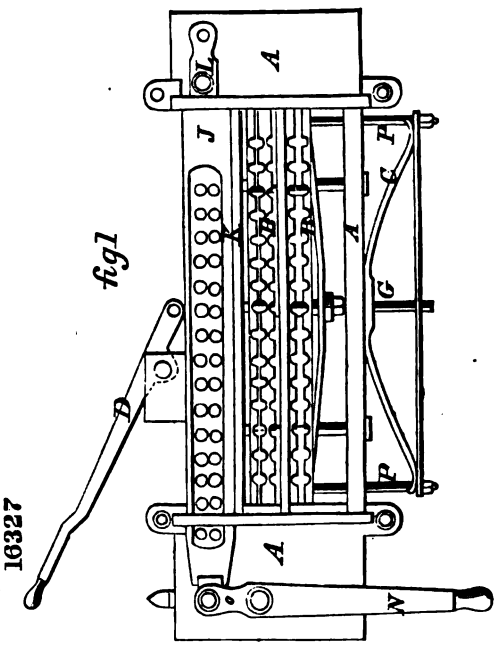

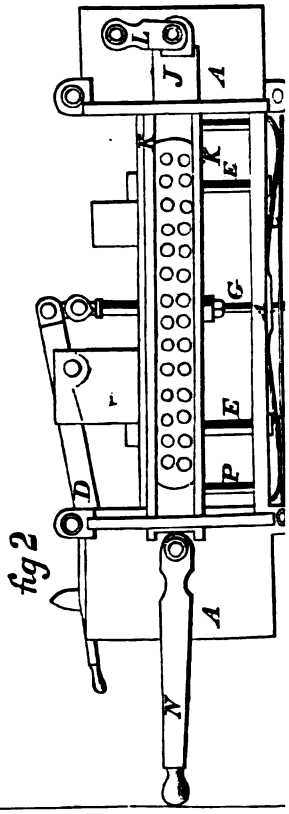

17920

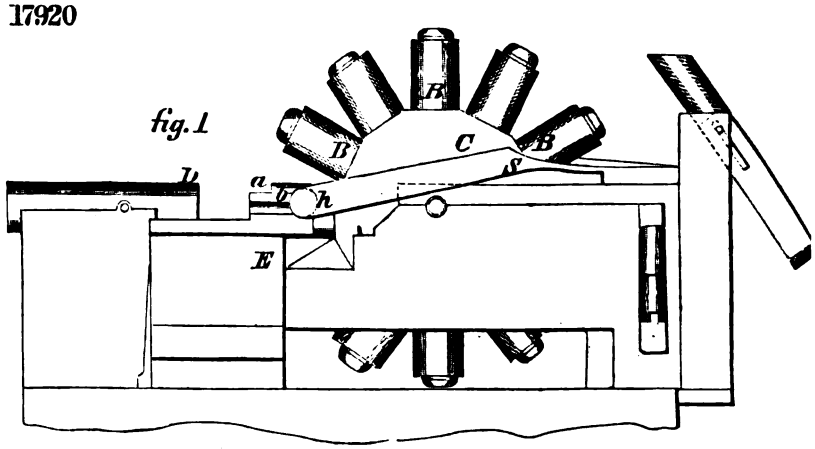

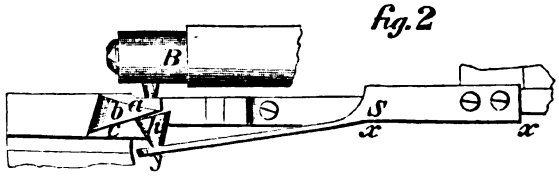

16587

fig 1

fig 2

16367

17702.

17287

17642

fig. 1

fig. 2

fig. 3

fig. 4

fig. 5

18217.

18143

17792

12385

fig. 1

fig. 2

16846

fig. 2

fig. 1

fig. 3

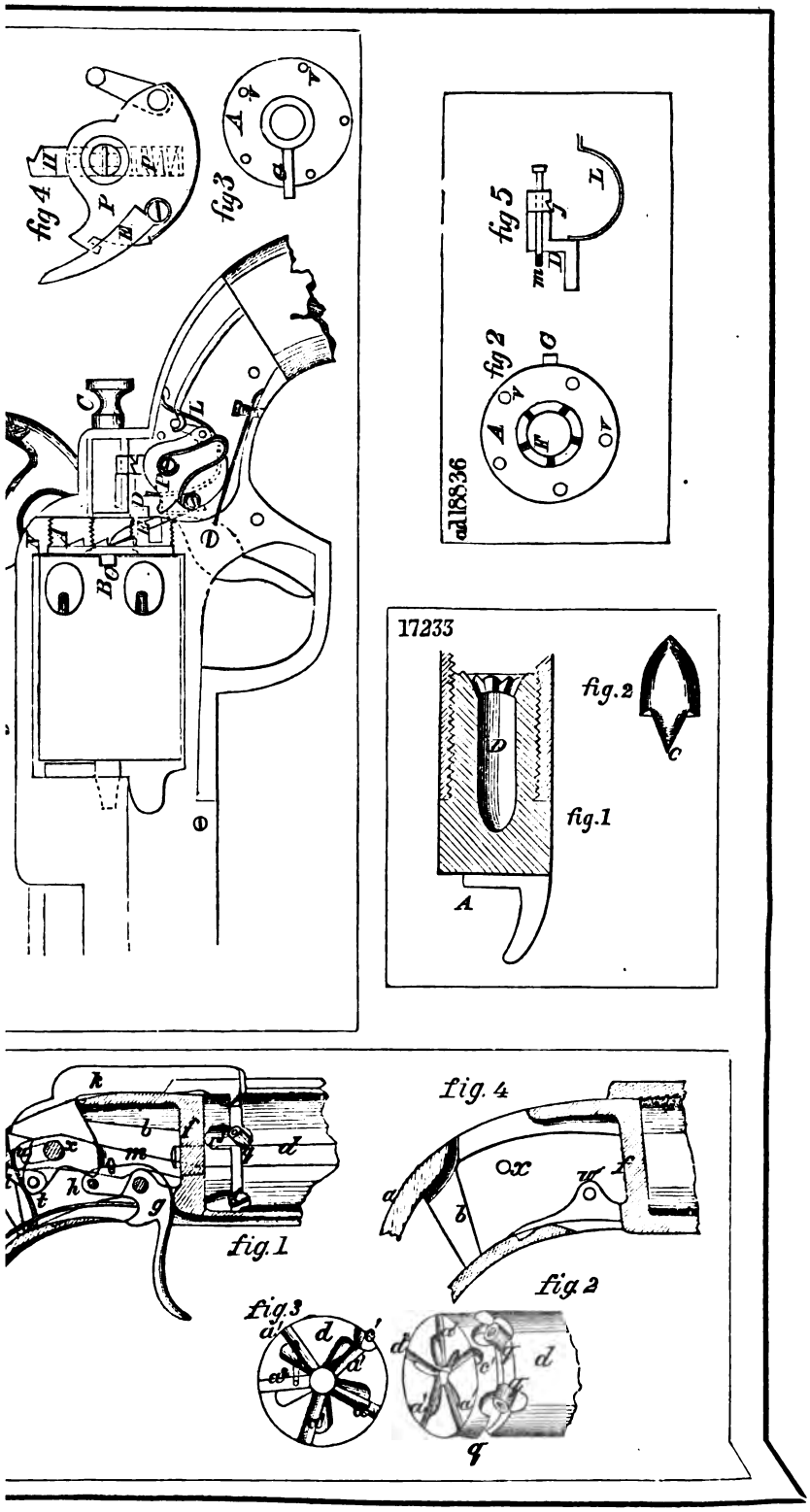
fig 4
fig 3
fig 5
fig 2
ad 18836
17233
fig. 2
fig. 1
fig. 1
fig. 4
fig. 2
fig. 3

16575

fig.1

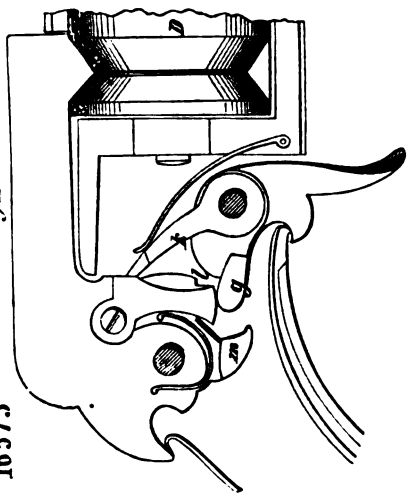

fig.2

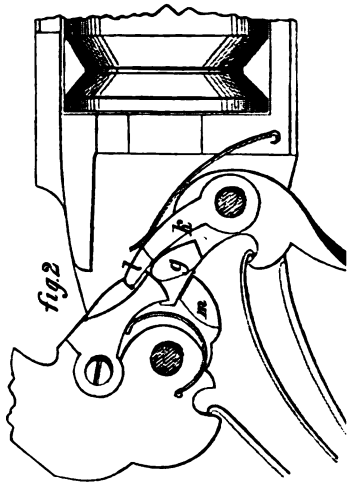

17136

fig.1

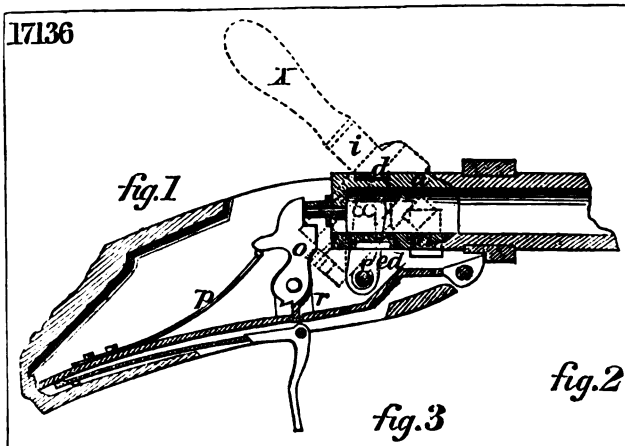

fig.2

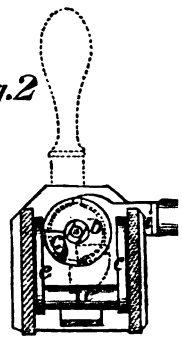

fig.3

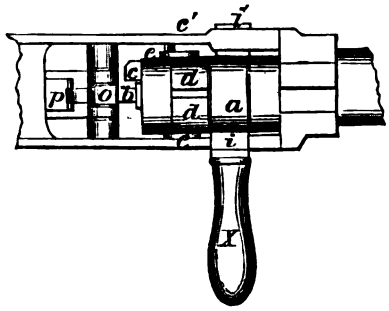

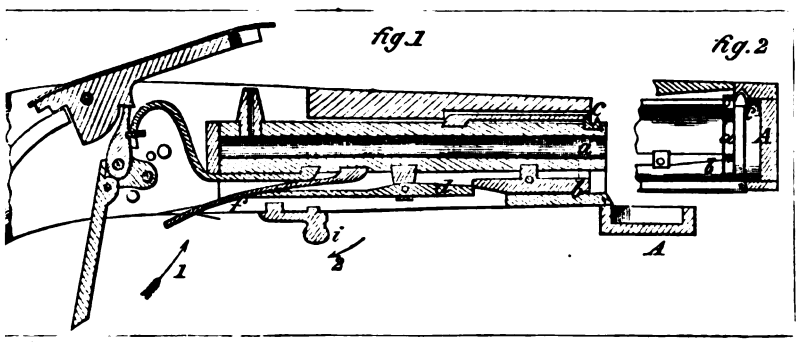
fig.1
fig.2

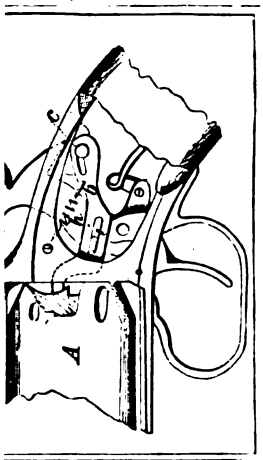

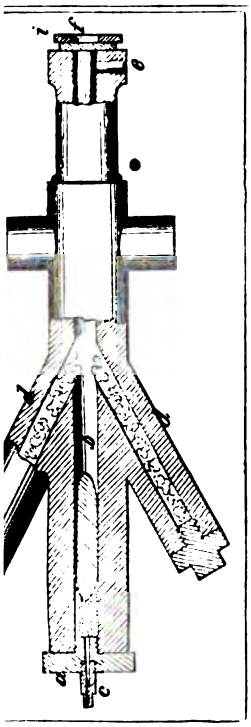

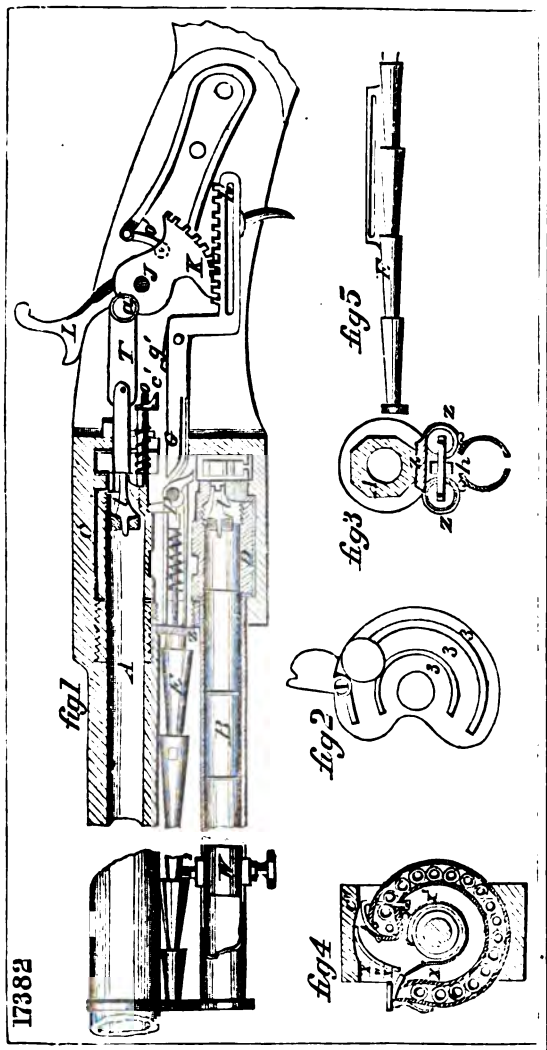
fig1
fig2
fig3
fig4
fig5
17382

16503

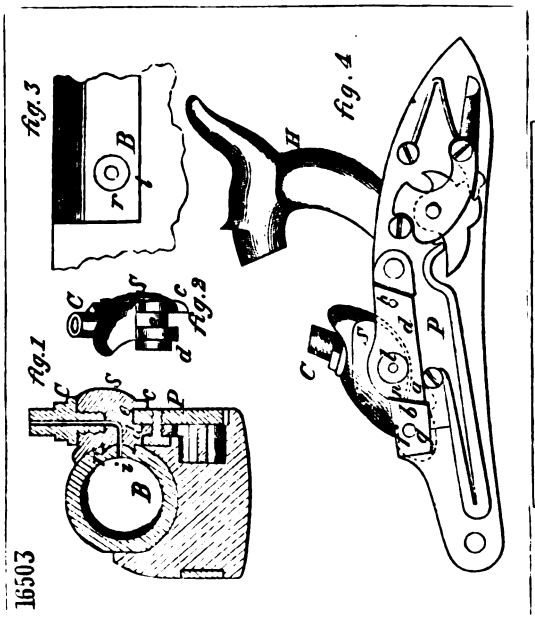

16411

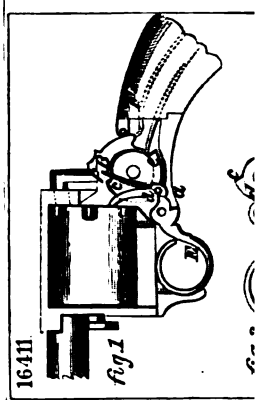

16797

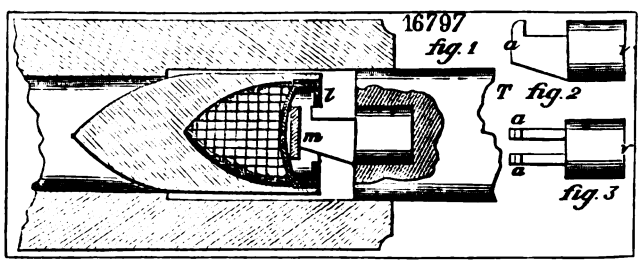

17698

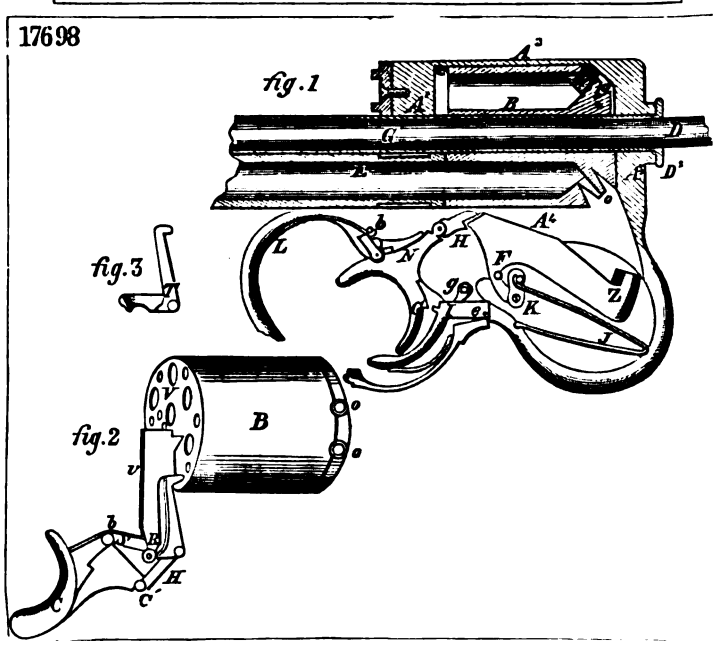

7044

fig 1

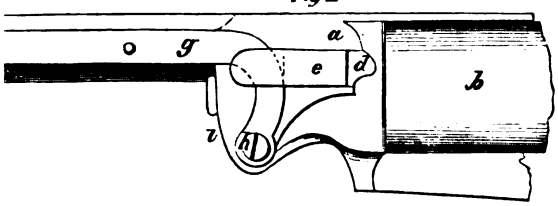

fig 3

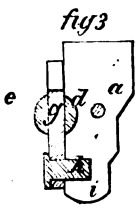

fig 2

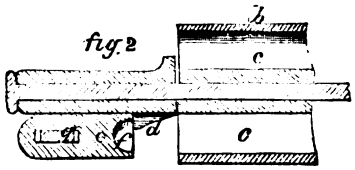

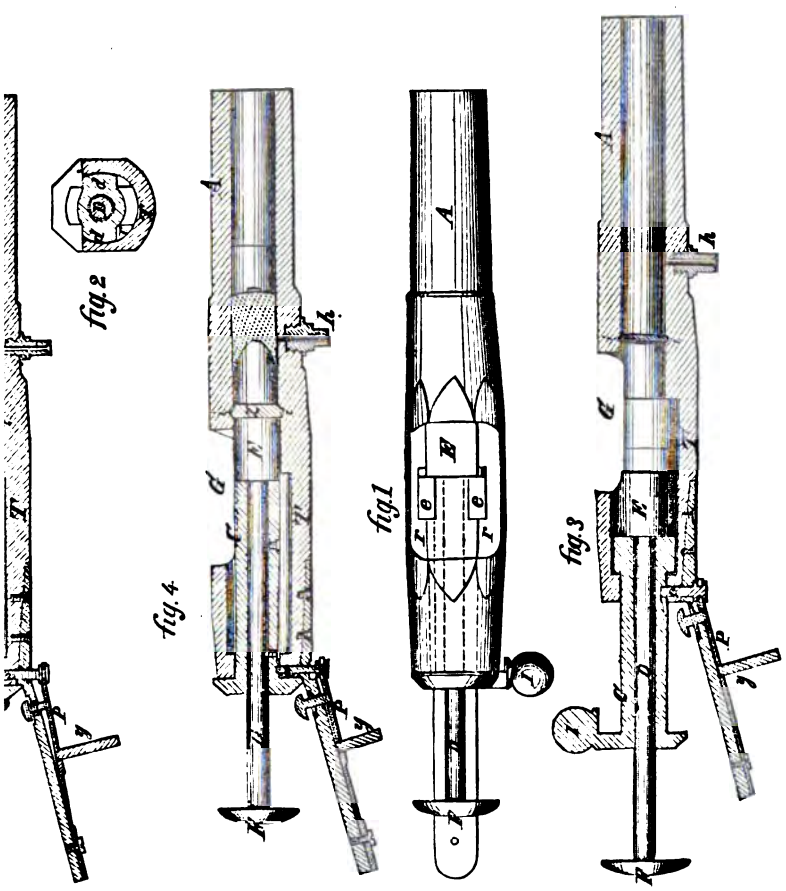

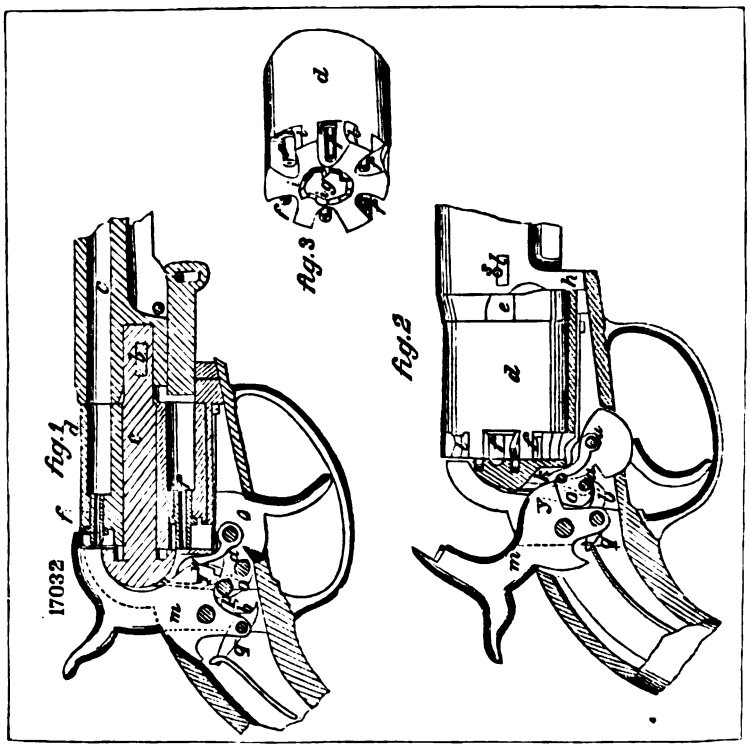
17032
fig.1
fig.2
fig.3

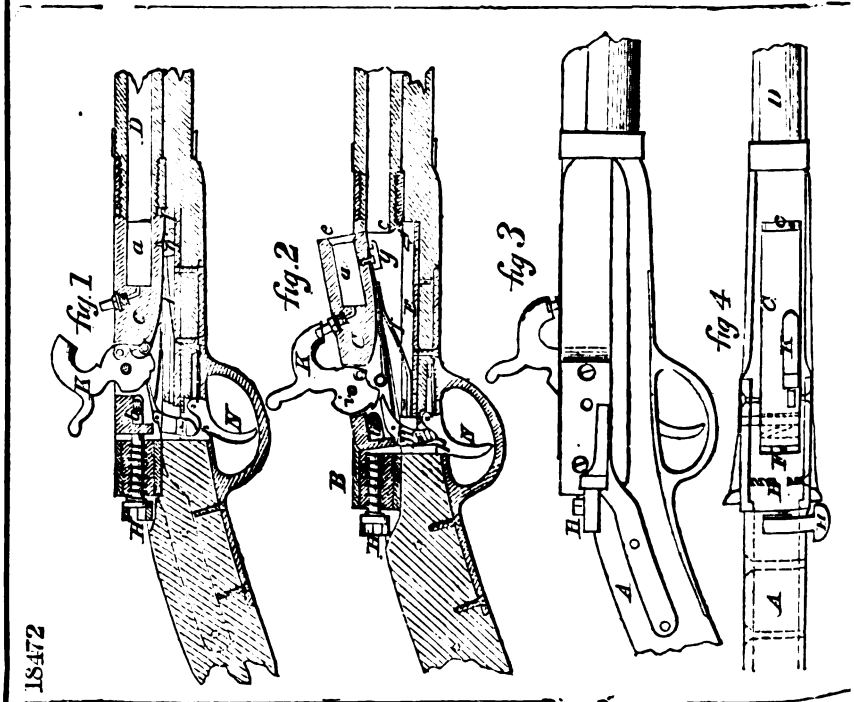
18472
fig.1
fig.2
fig.3
fig.4

17733

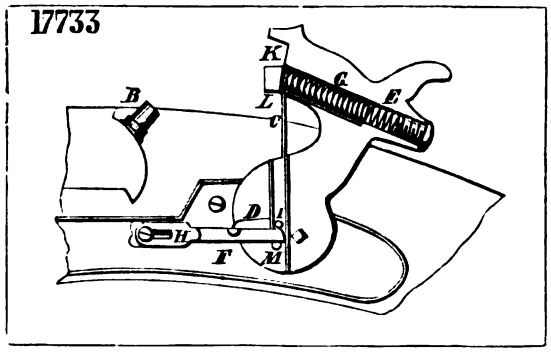

716

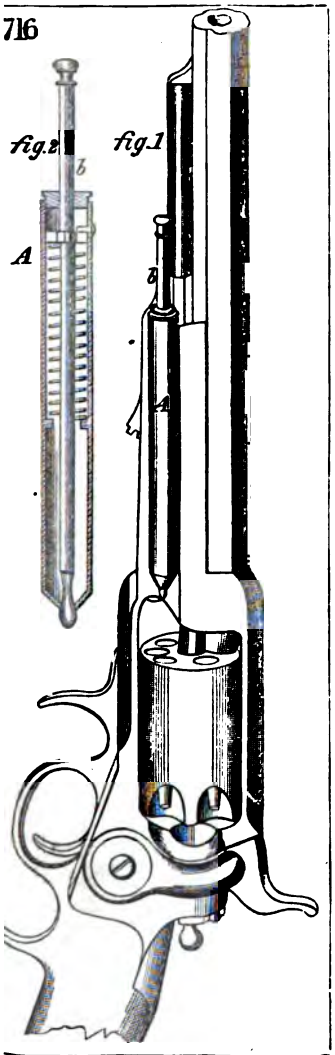

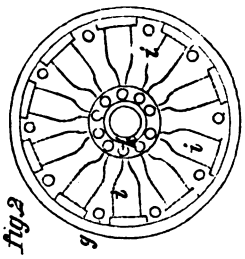

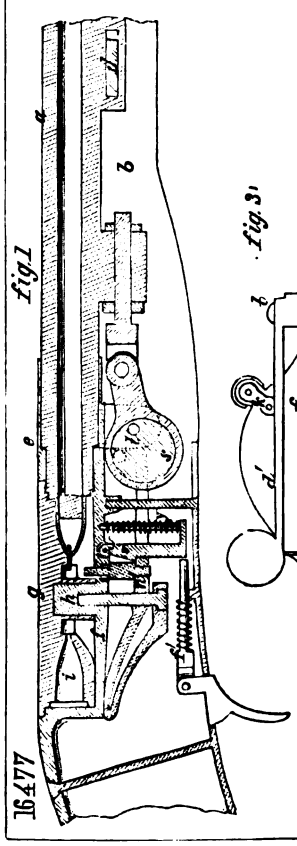

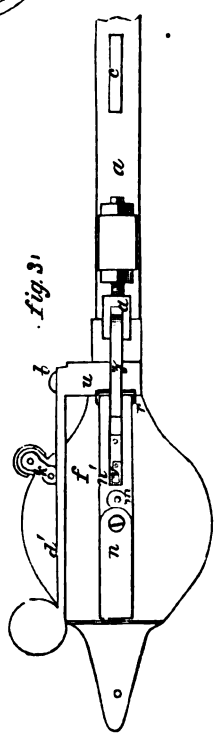

16477

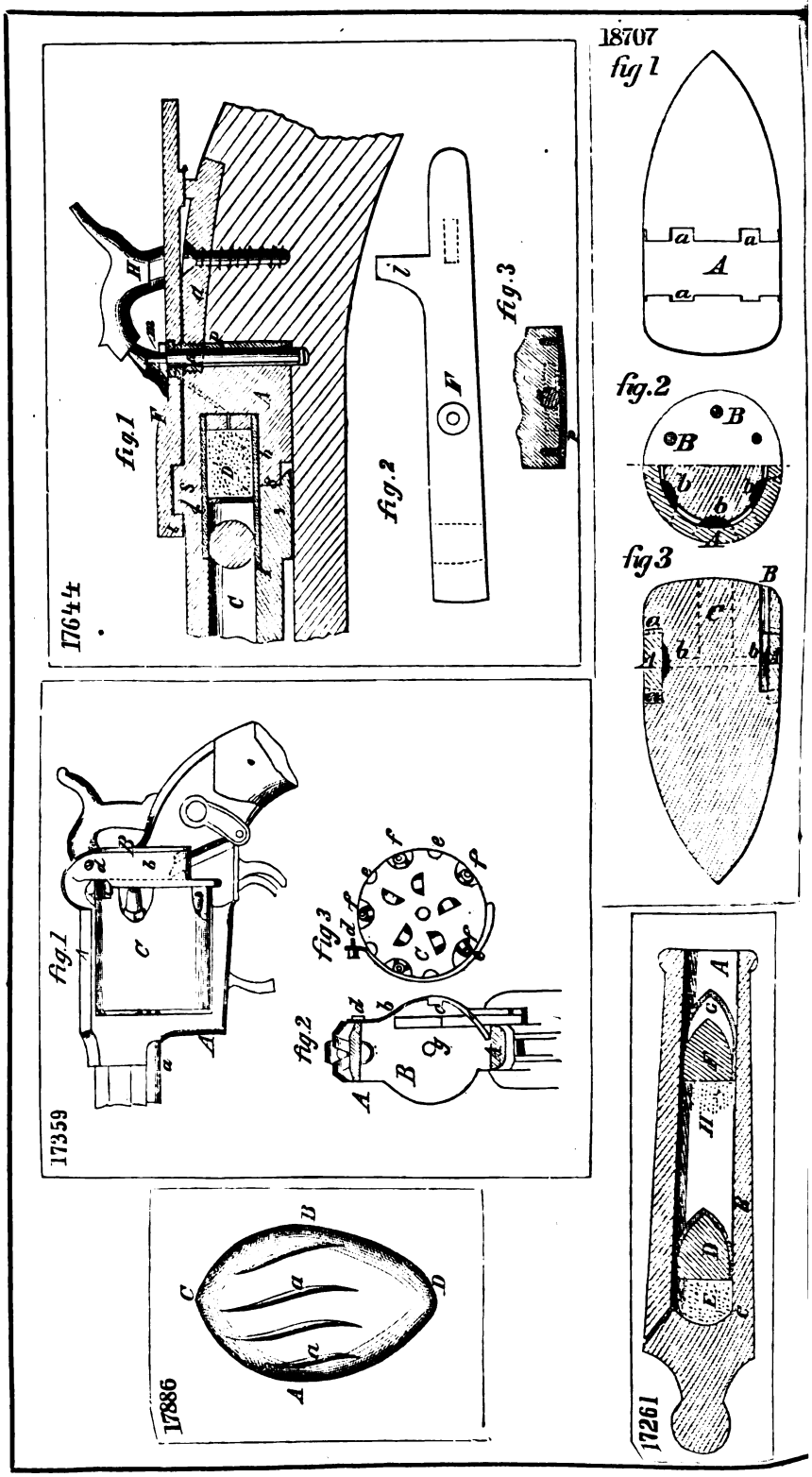
17644
fig.1
fig.2
fig.3
17359
fig.1
fig.2
fig.3
17886
18707
fig 1
fig.2
fig 3
17261

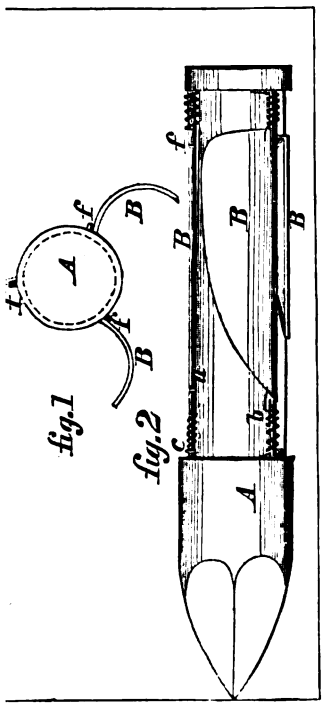
fig.1
fig.2
A
B
f
b
c

17863

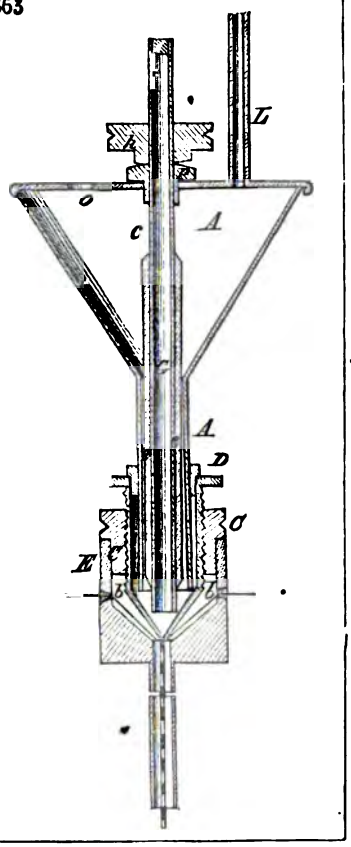
L
o
c
A
D
G
K

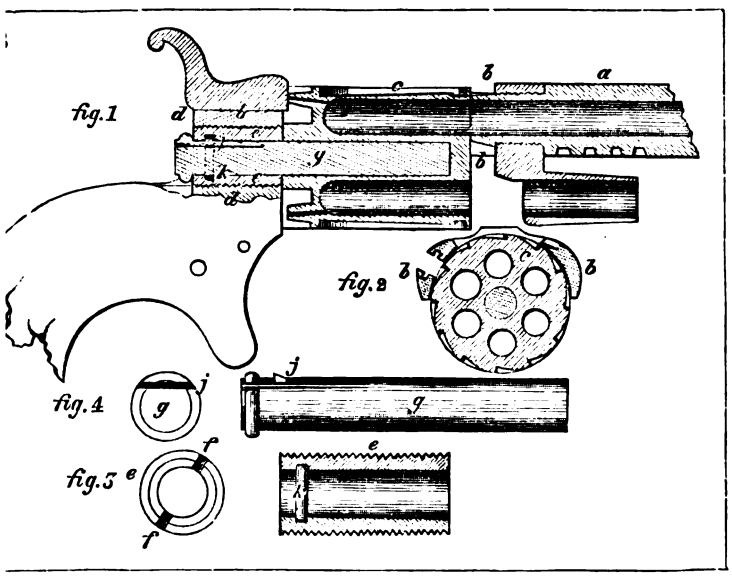
fig.1
fig.2
fig.3
fig.4
a
b
c
d
e
f
g
h
i
j
k
l
m
y

17915

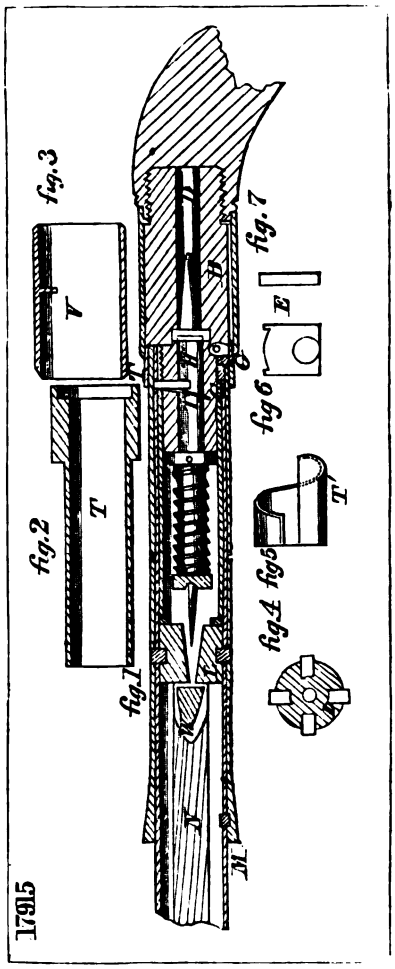

18486

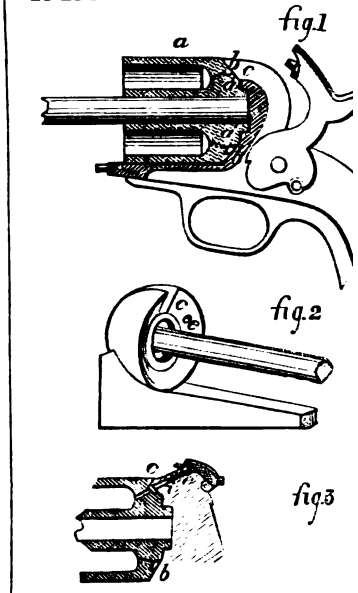

16944

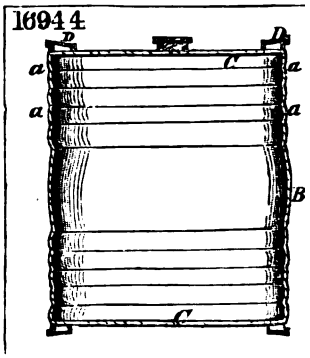

18418

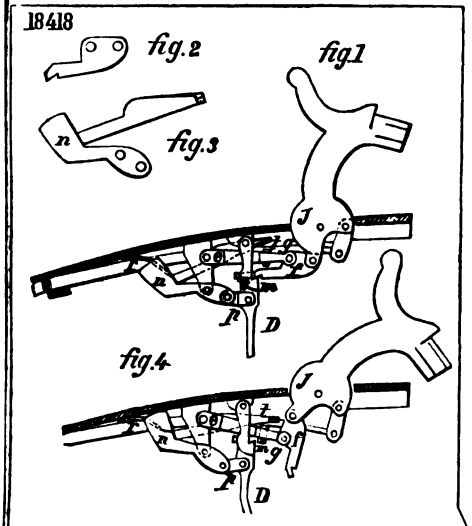

18049

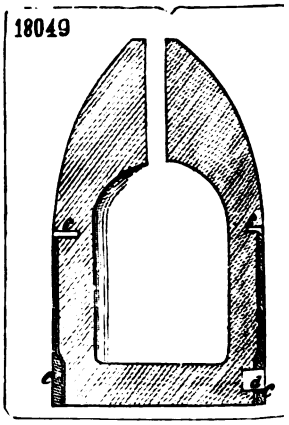

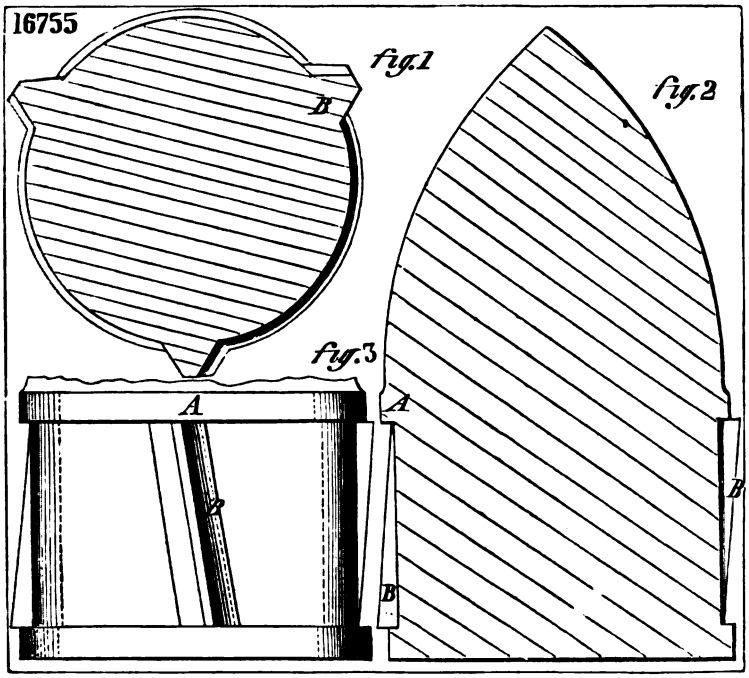
16755
fig.1
fig.2
fig.3
A
B

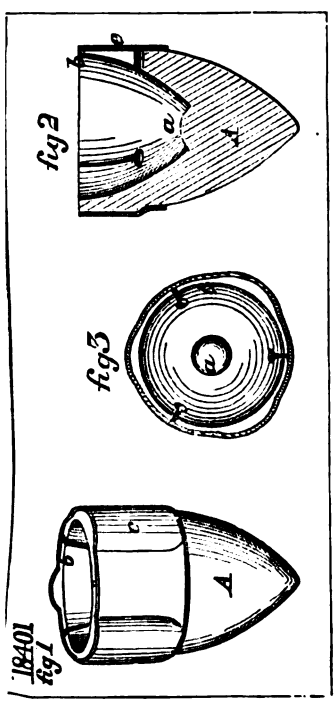
18401
fig.1
fig.2
fig.3
A
a
b
c

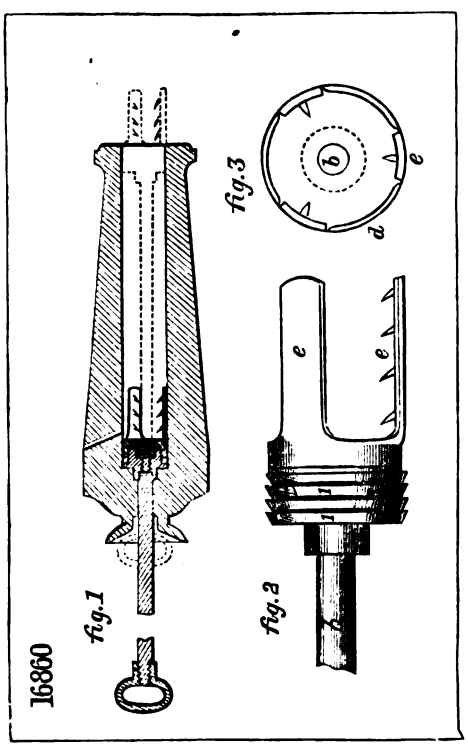
16860
fig.1
fig.2
fig.3
b
d
e

16634

Fig. 1

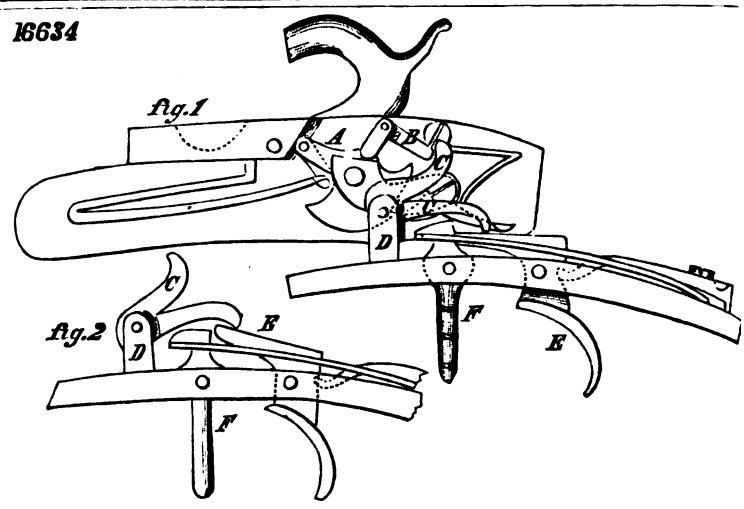

Fig. 2

16683

fig. 1

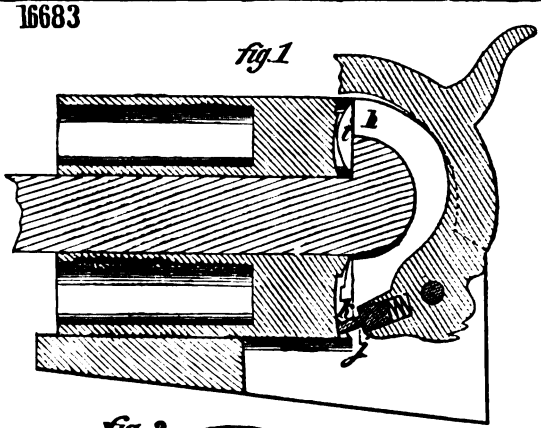

fig. 2

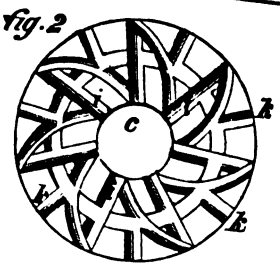

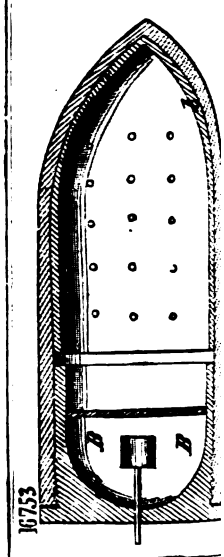

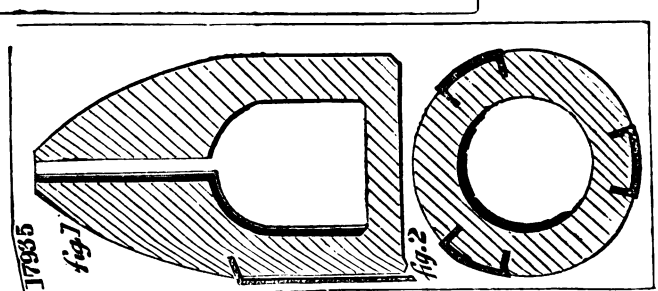

16377

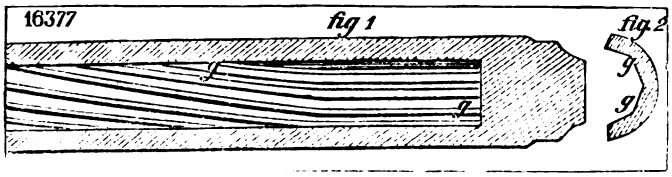

8866

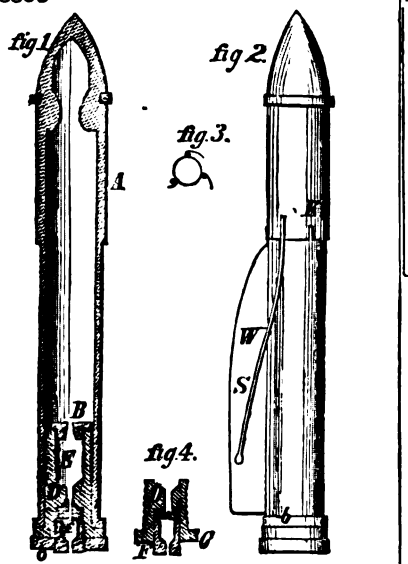

18568

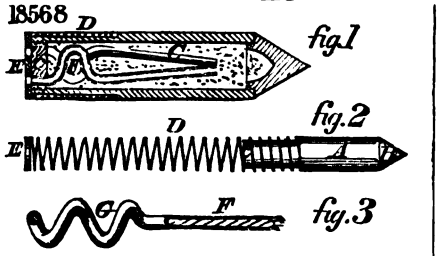

16571

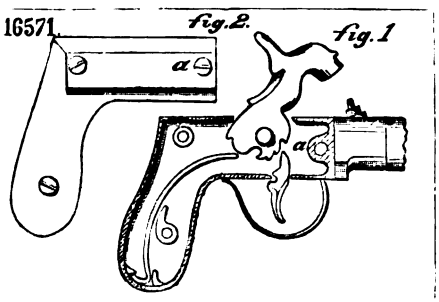

18387

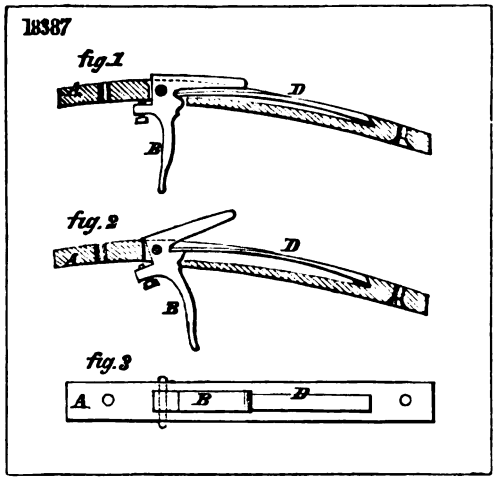

17312

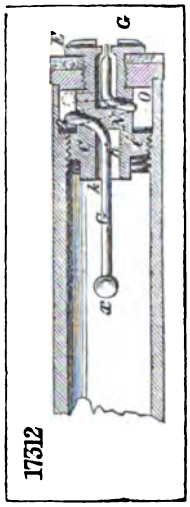

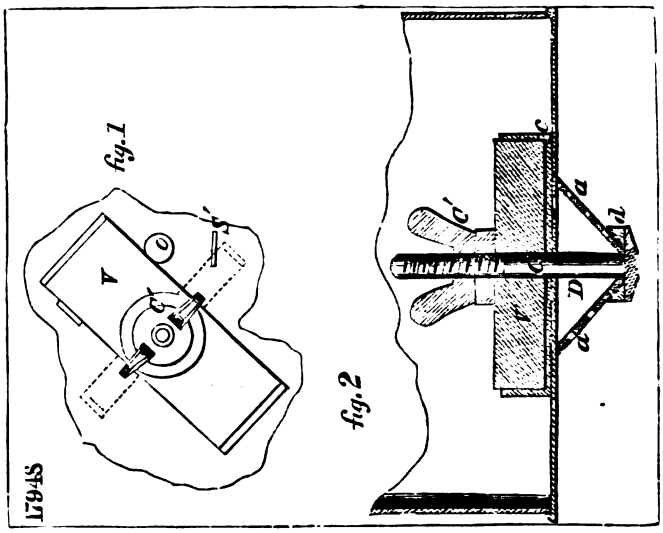
fig.1
fig.2
1794S

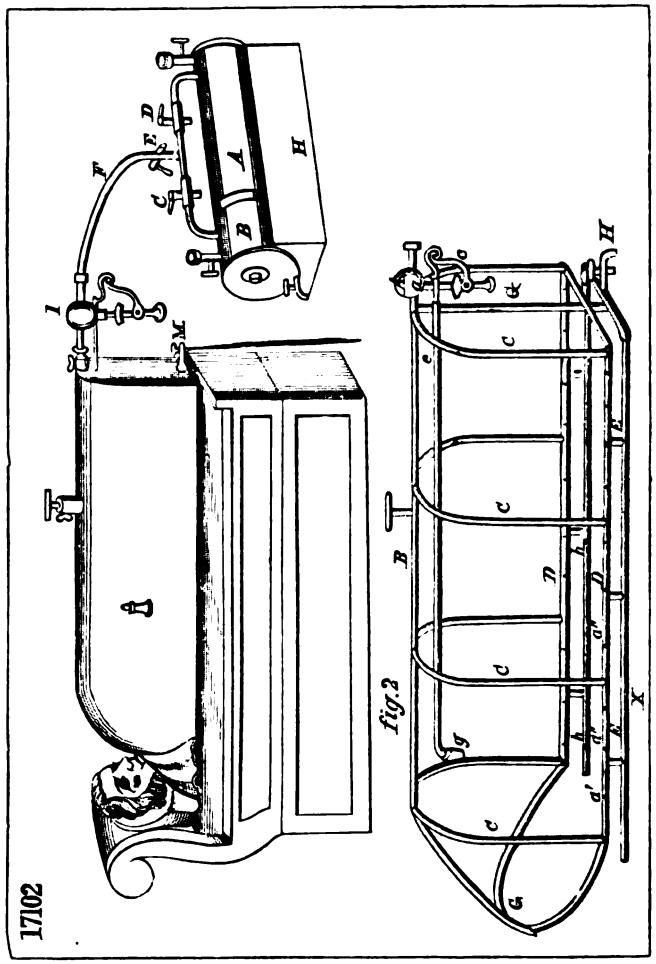
fig.2
1710Z

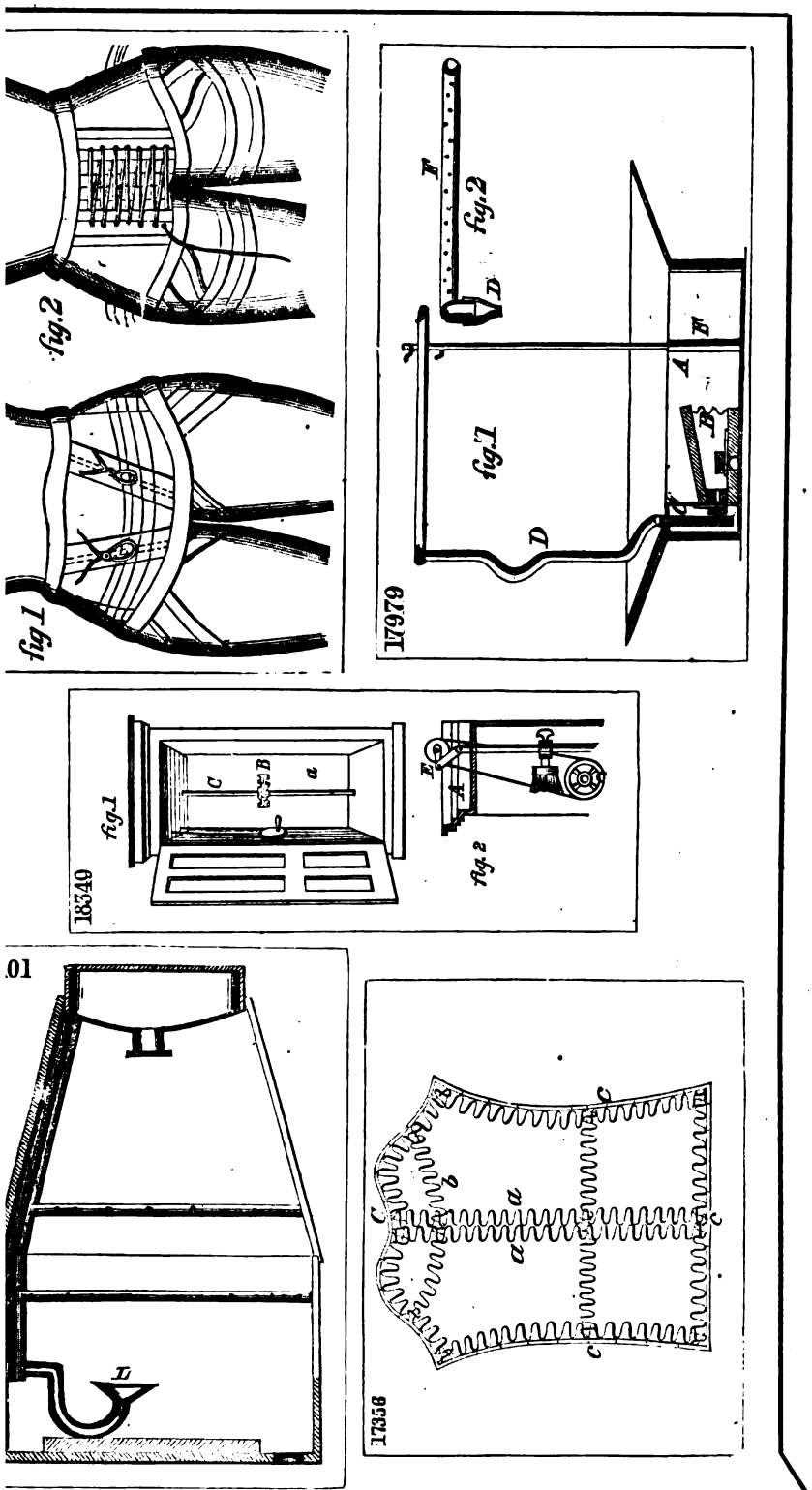
fig.2
fig.1
17979
fig.2
fig.1
18340
fig.1
fig.2
01
17358

16361

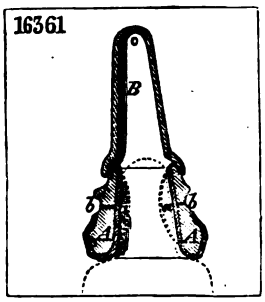

17095

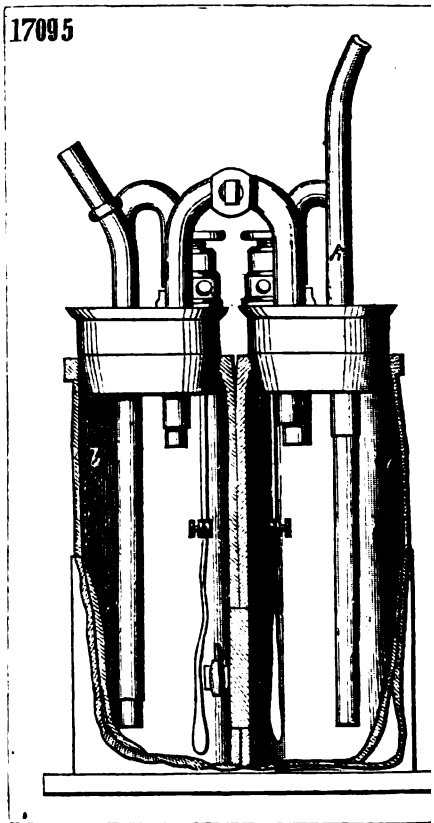

16479

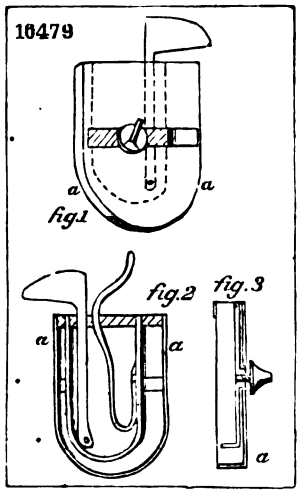

18021.

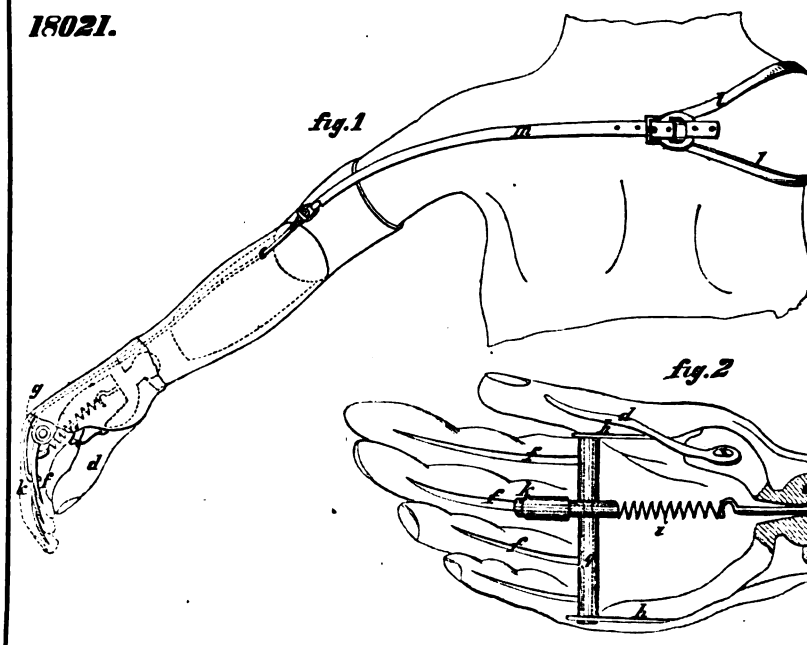

17107

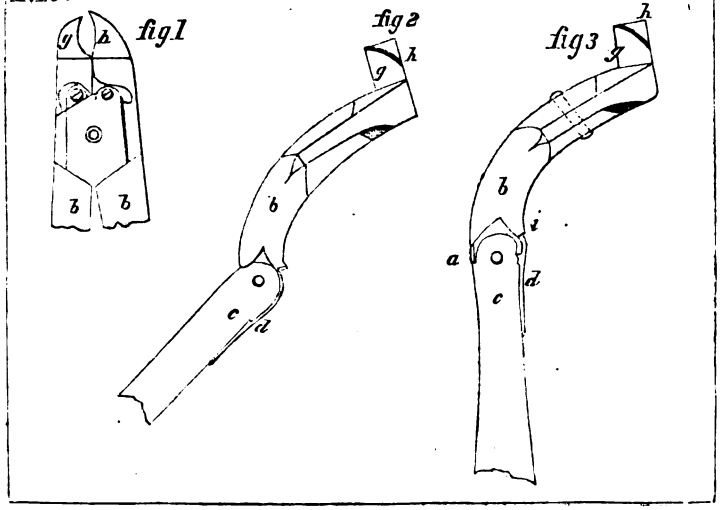

17262

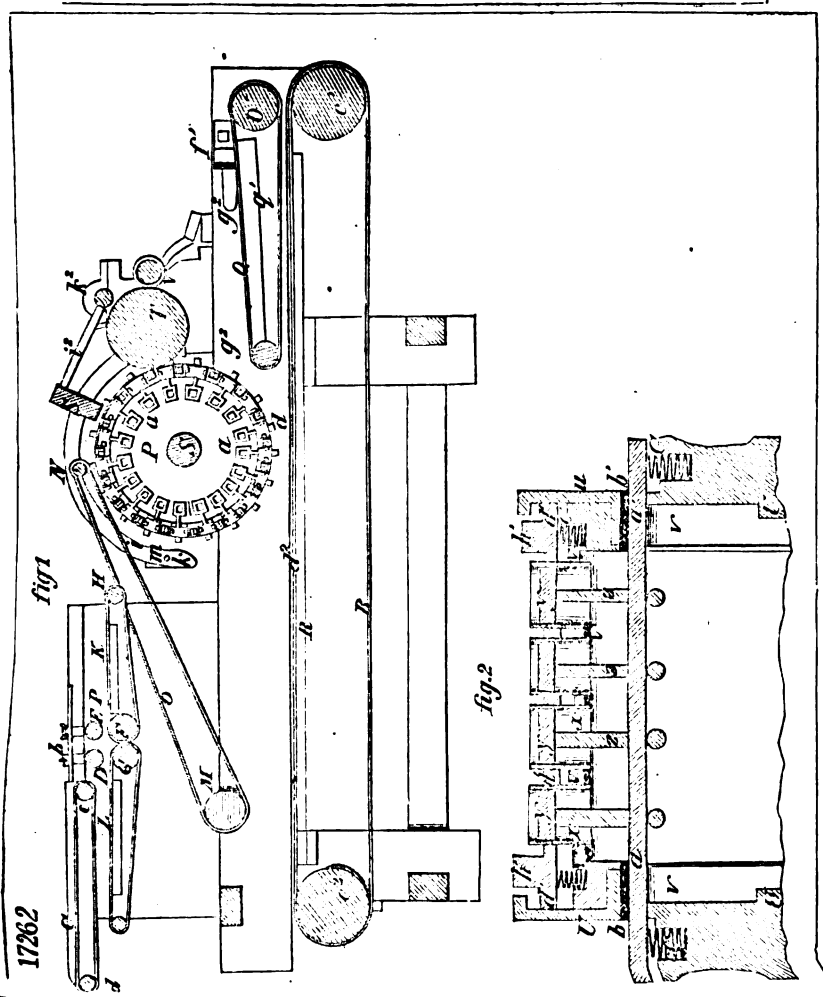

16361

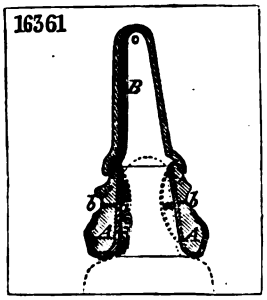

10479

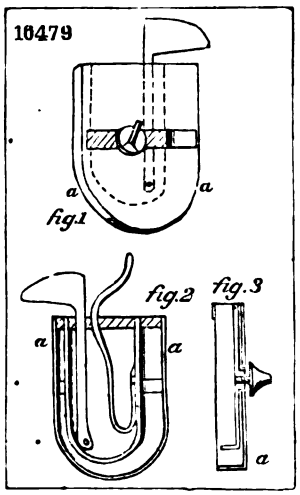

17095

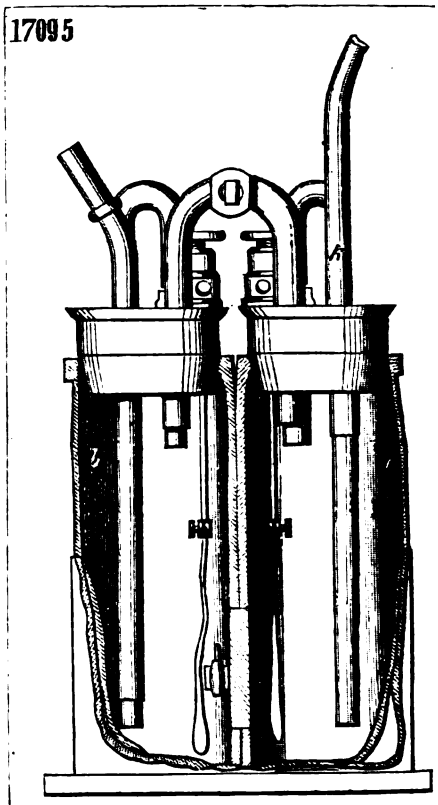

18021.

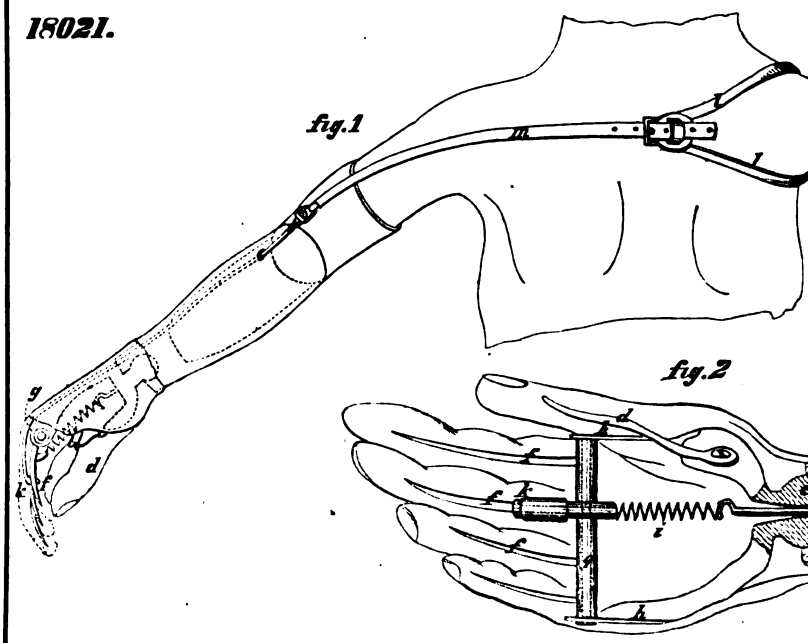

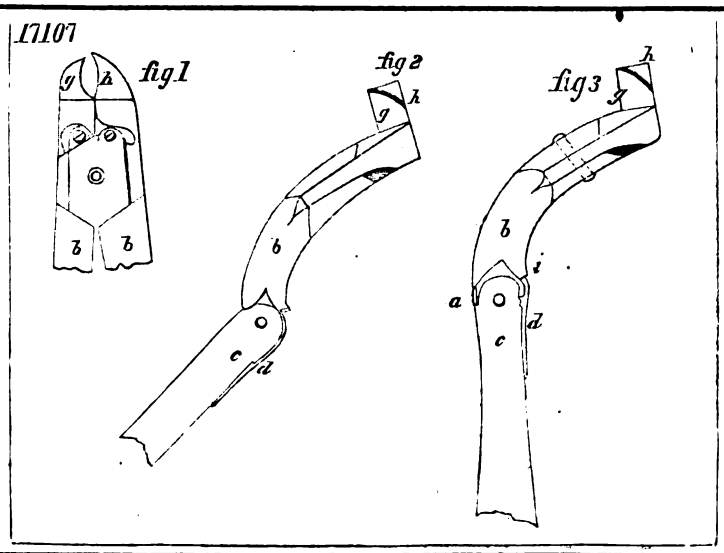
17107
fig 1
fig 2
fig 3

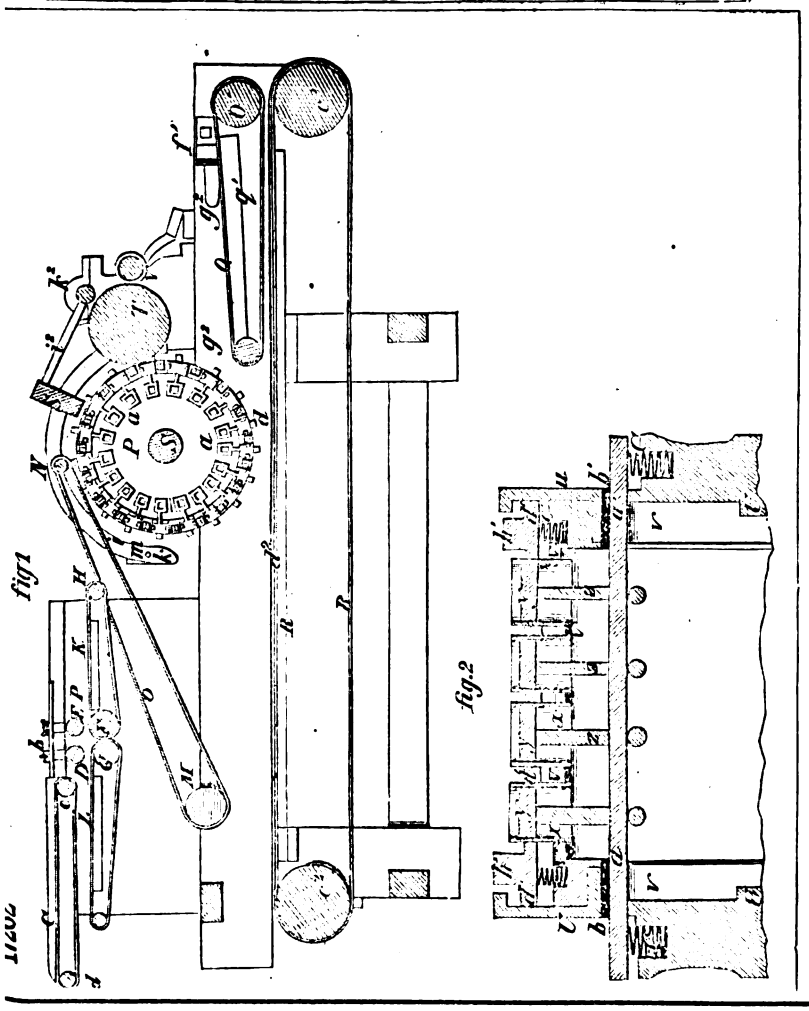
fig 1
fig 2
17107

17195

fig. 1

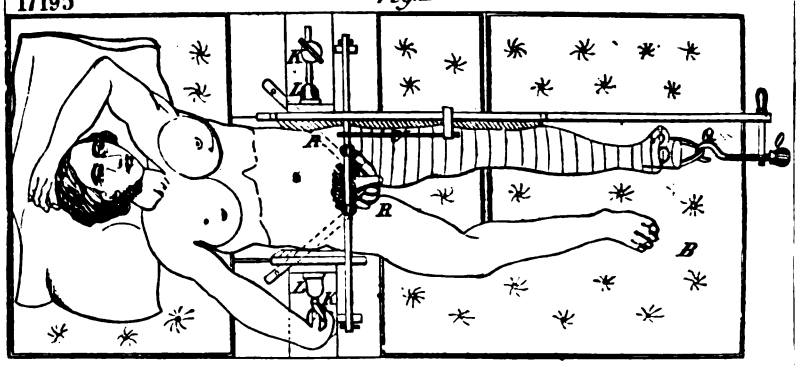

fig. 2

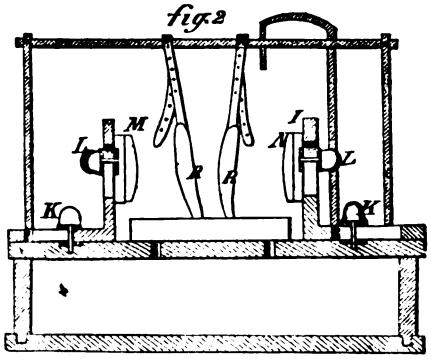

17670

fig. 1.

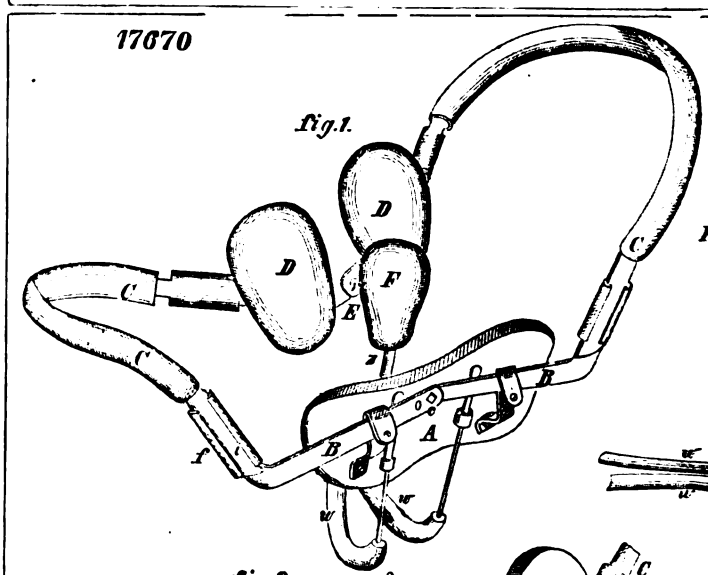

fig. 3.

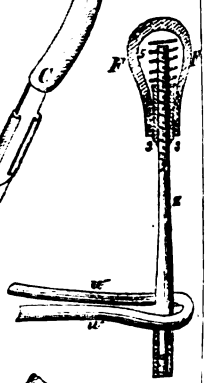

fig. 2.

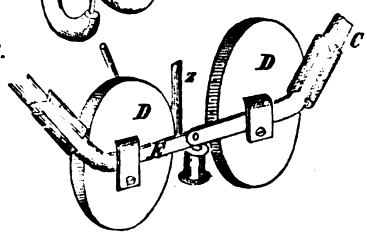

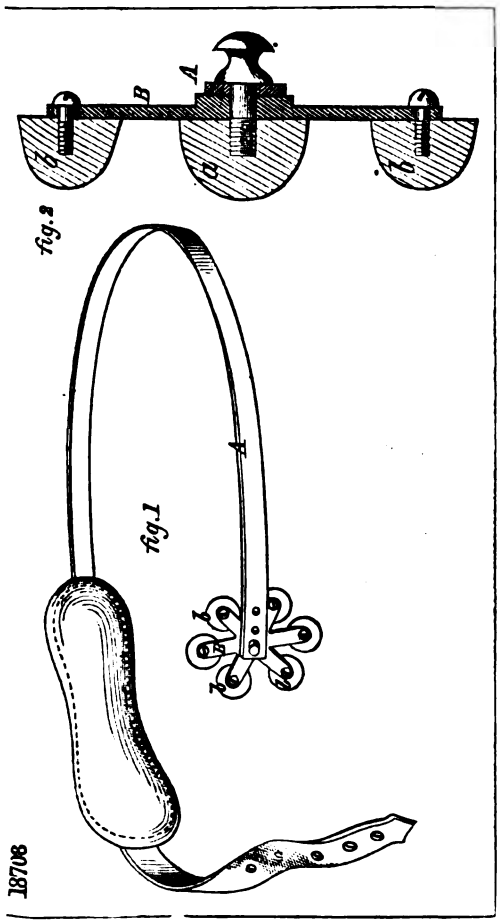
fig.2
A
B
fig.1
A
18708

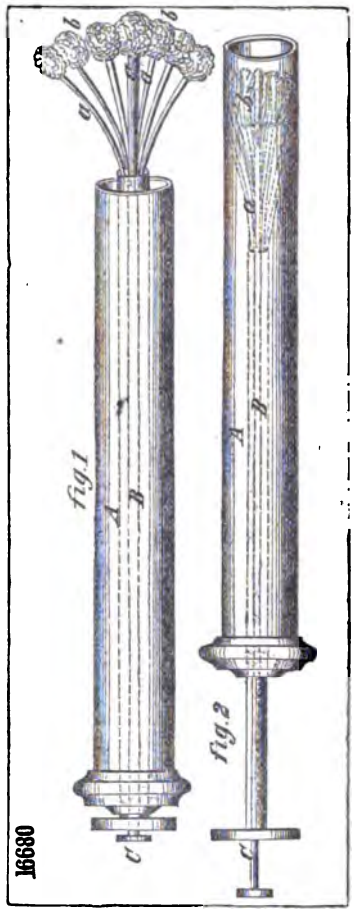
fig.1
fig.2
16680

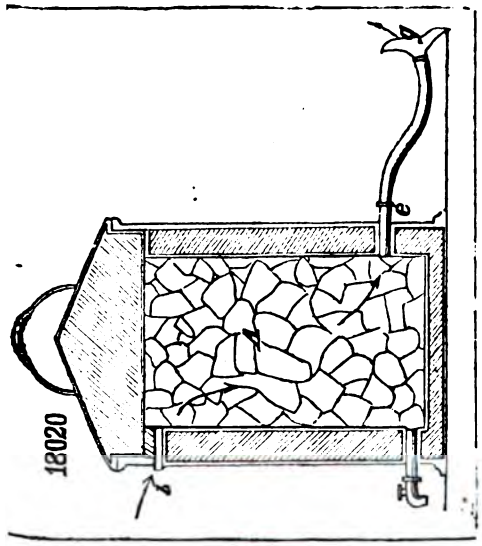
e
18020

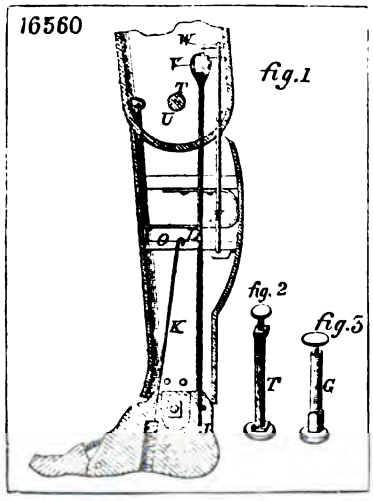
16560
fig.1
fig.2
fig.3
K
T
G

16182

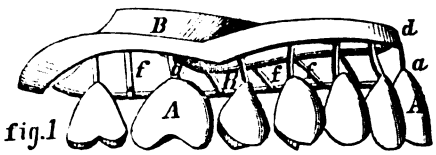

fig.1

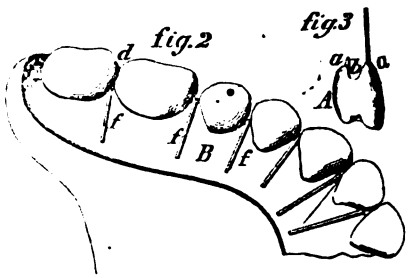

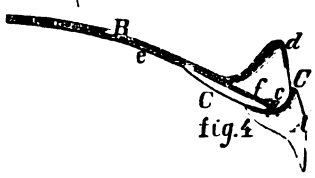

fig.4

16956

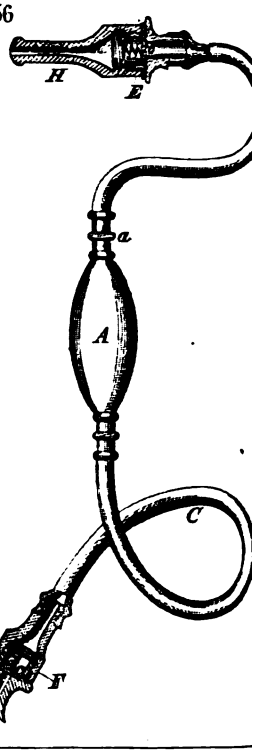

16396

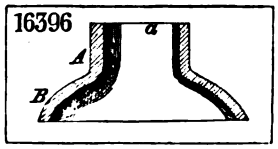

16822

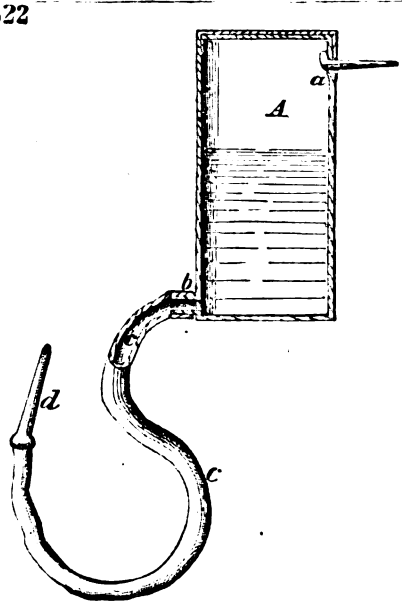

16420

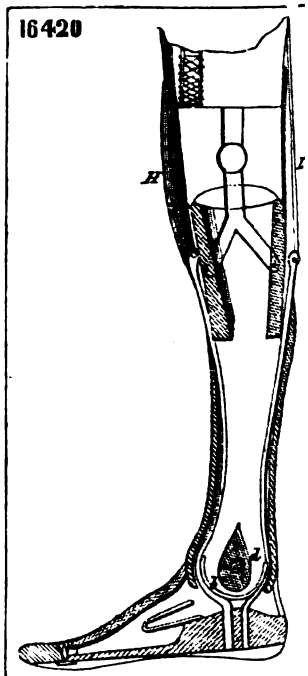

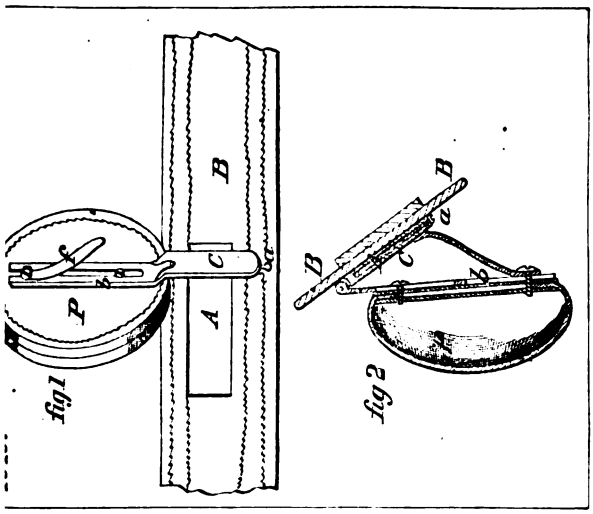
fig 1
P
A
B
C
fig 2
B
B
C
a
b

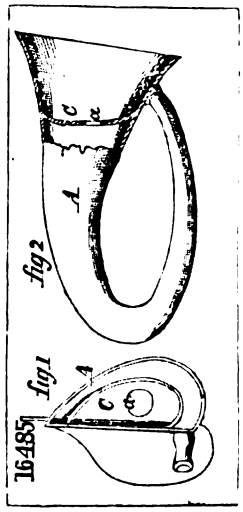
16485
fig 1
A
C
fig 2
A
C
a

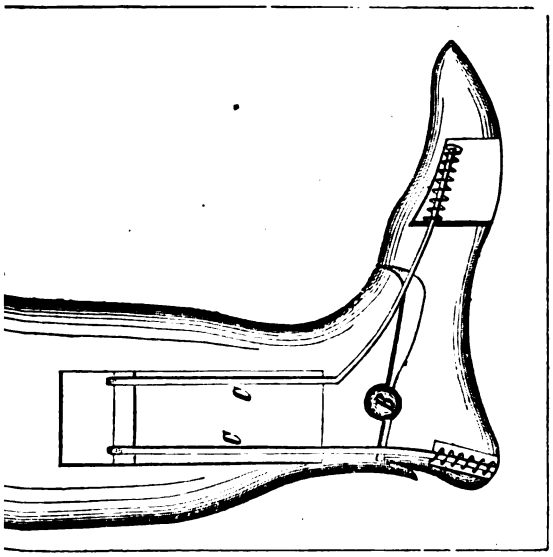
C
C

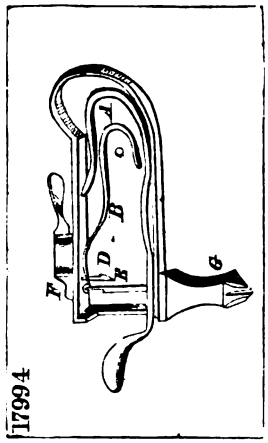
17994
A
B
D
E
G

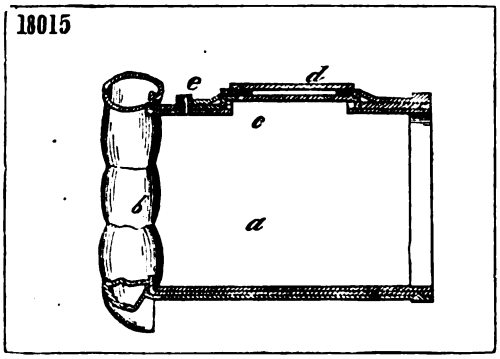
18015
e
d
c
b
a

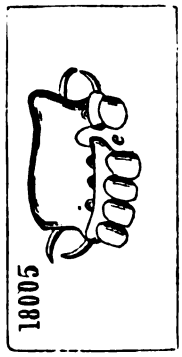
18005

16708

fig.1

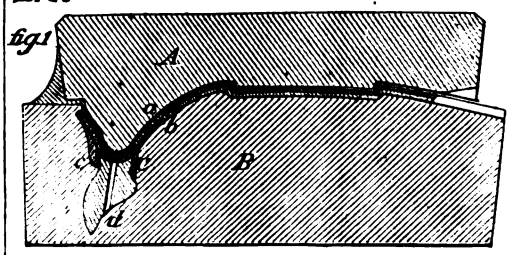

fig.2

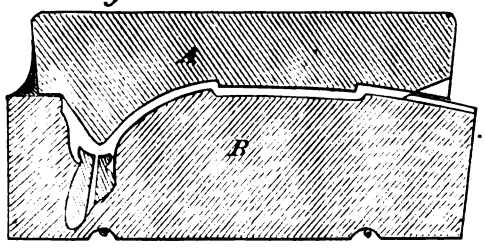

16478

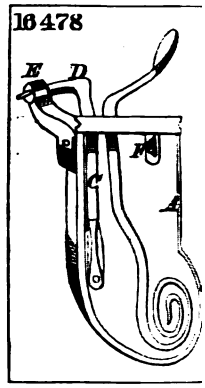

16835

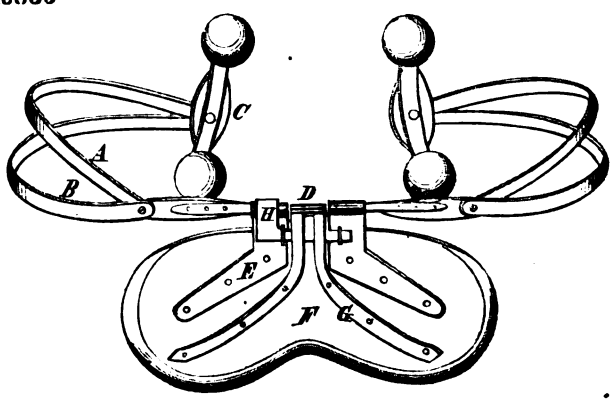

17775

16433

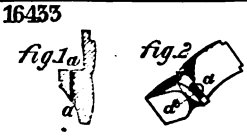

17000

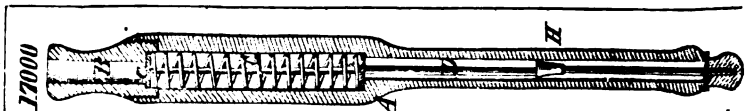

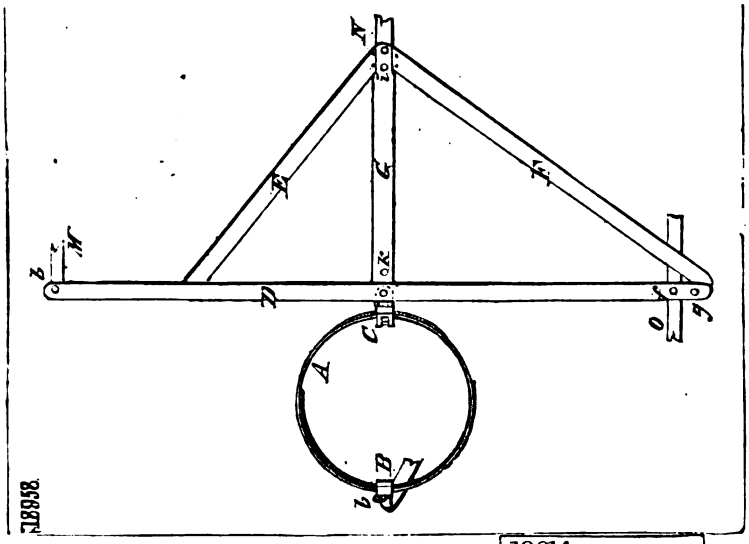

18014

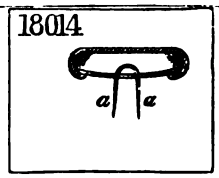

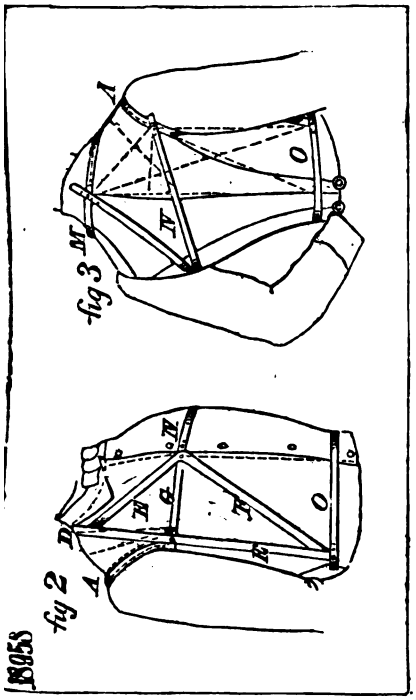

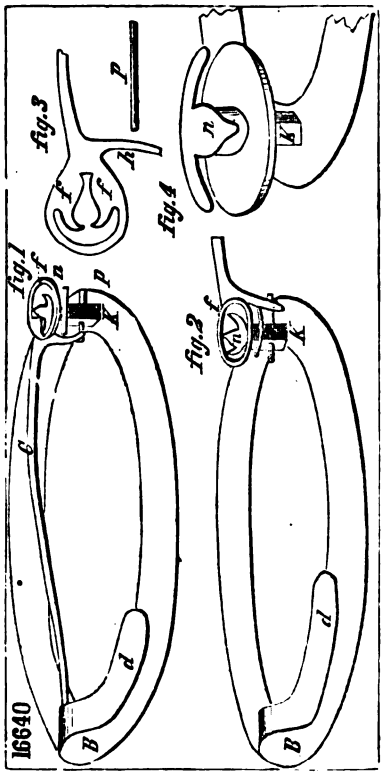

16859

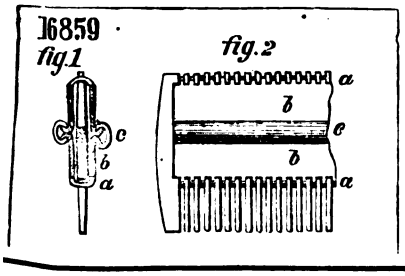

7573

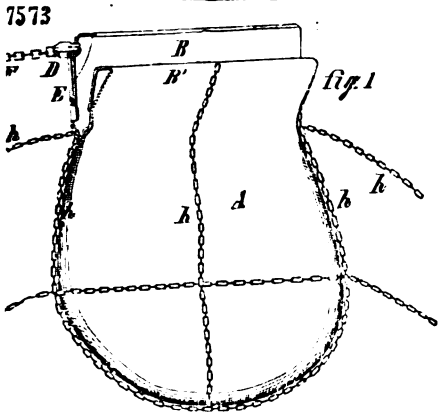

17857

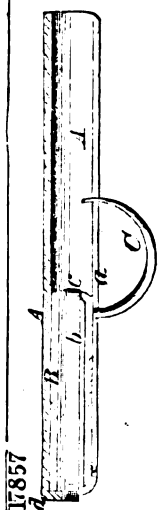

583

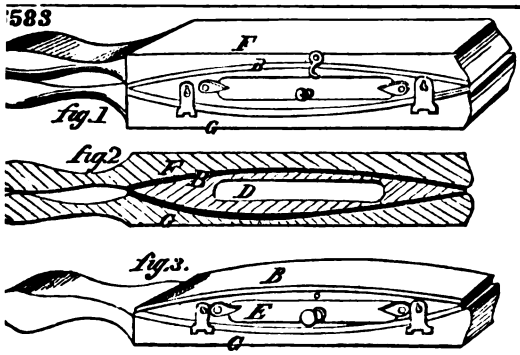

18445

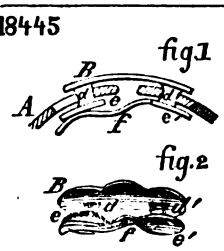

16533

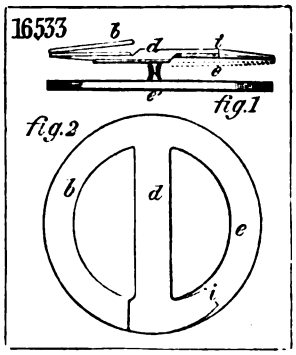

7241

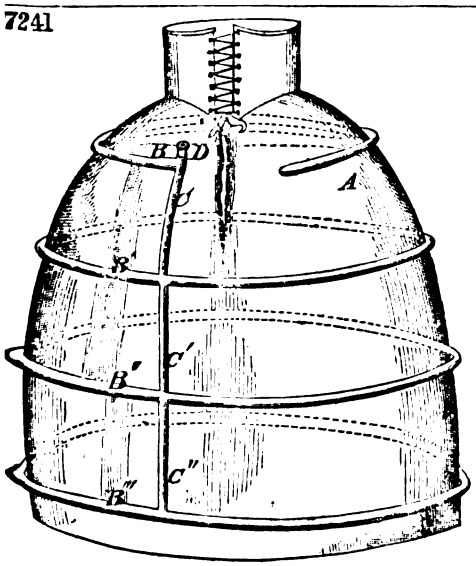

18013

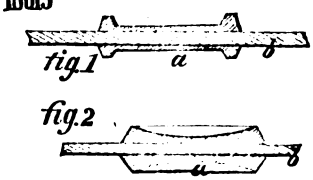

17600

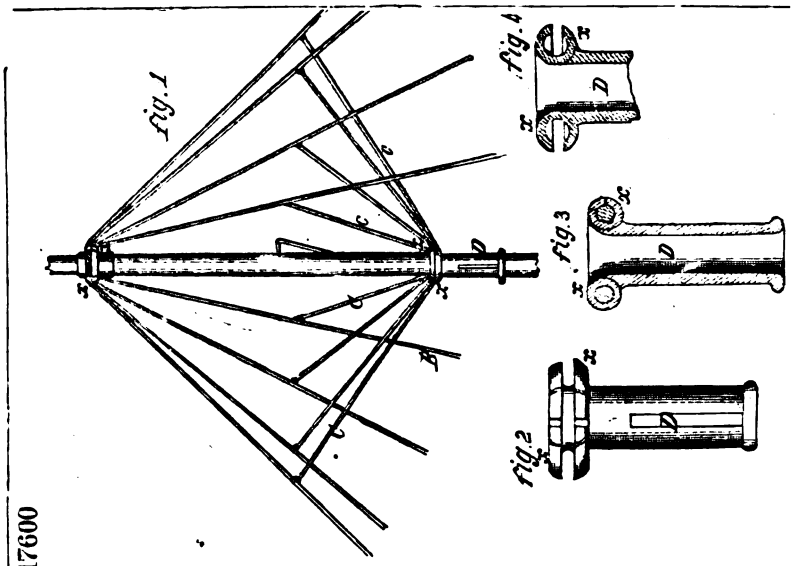

18036

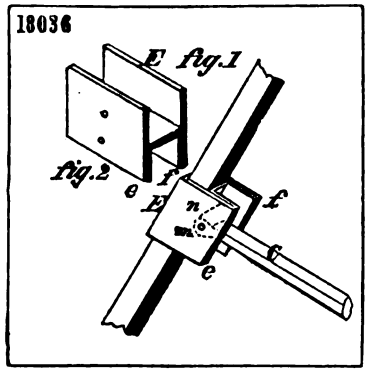

17413

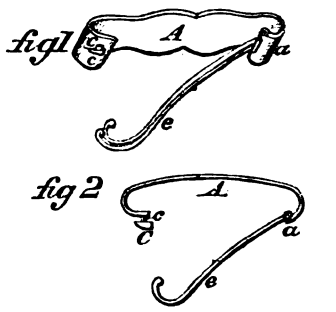

18560

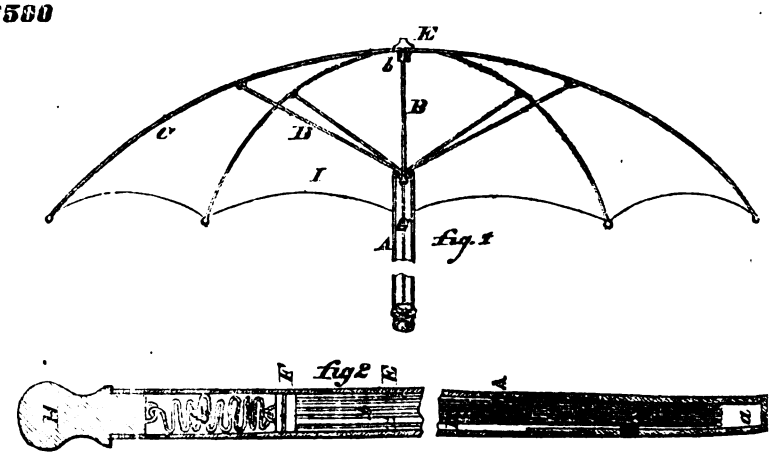

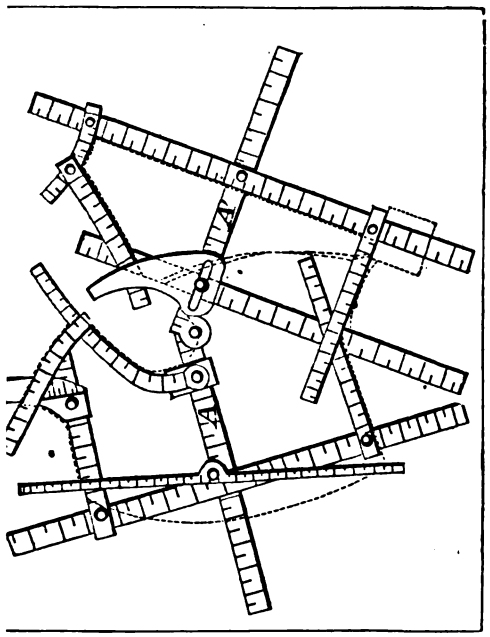

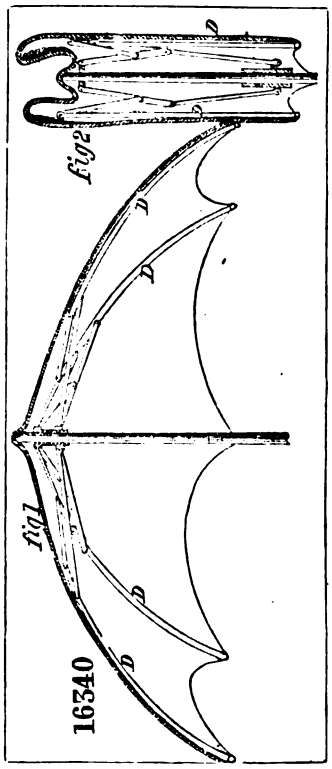
fig2
fig1
16340

16328

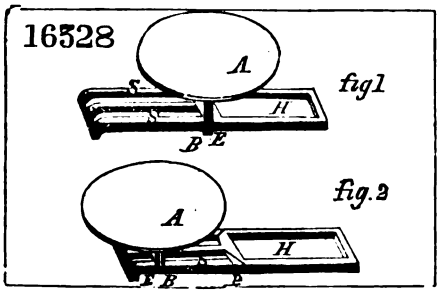
A
H
B
E
fig1
fig.2

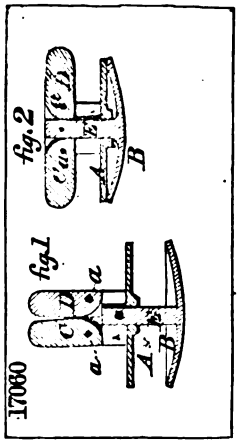
fig.2
B
fig1
a
A
B
17060

45

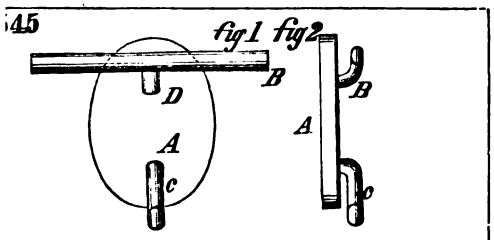
fig1
fig2
B
D
A
c
B
A
c

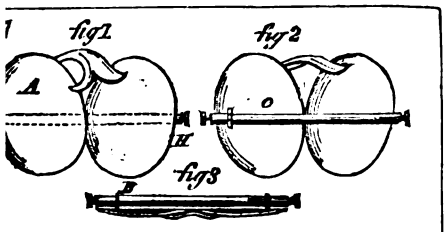
fig1
fig2
A
H
fig3

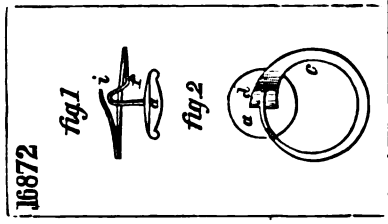
fig1
fig2
c
16872

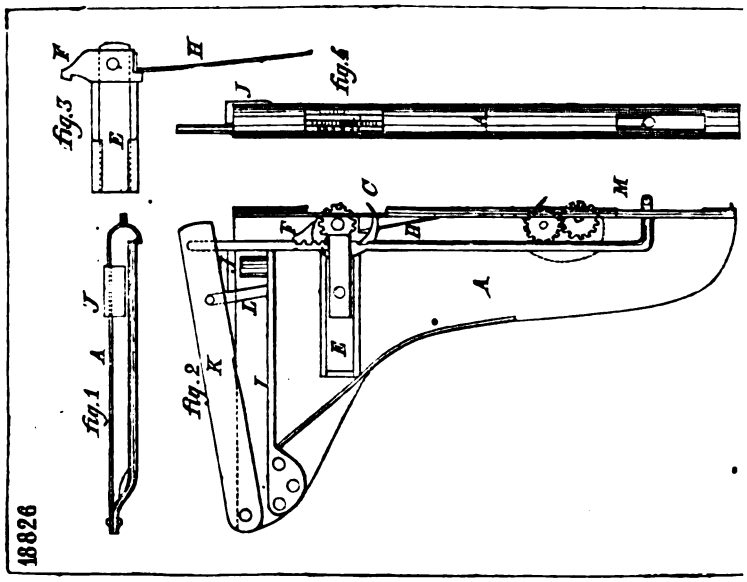

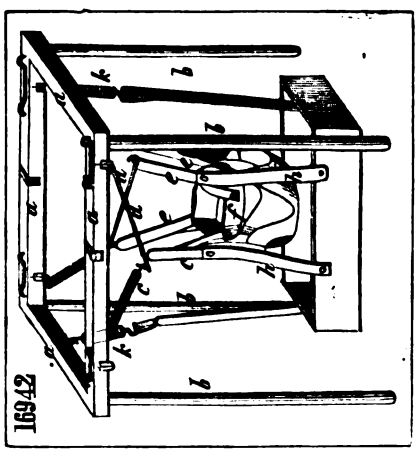

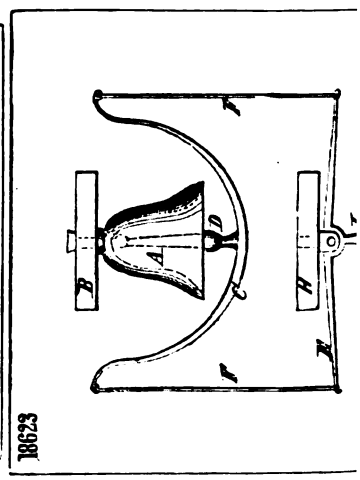

17621

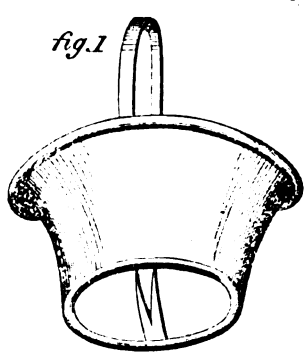

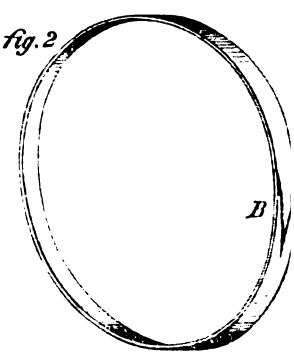

17836

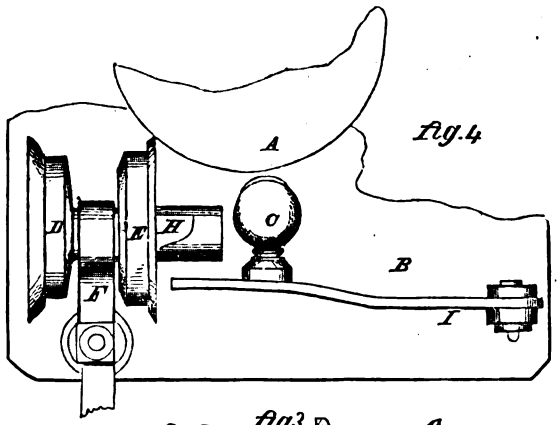

Fig. 4.

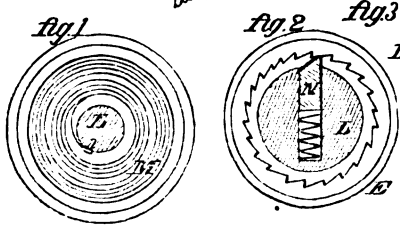

16374

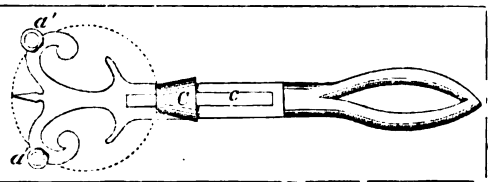

16862

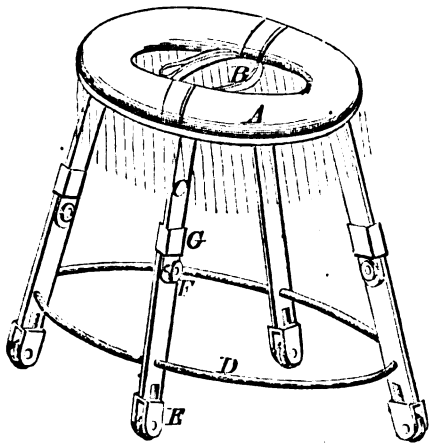

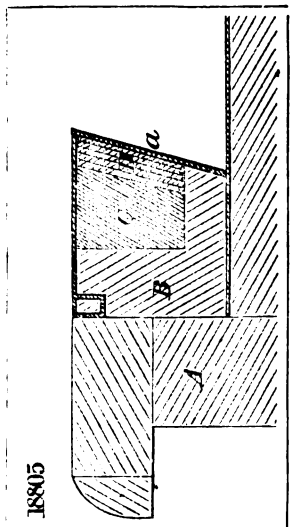

18805

17504

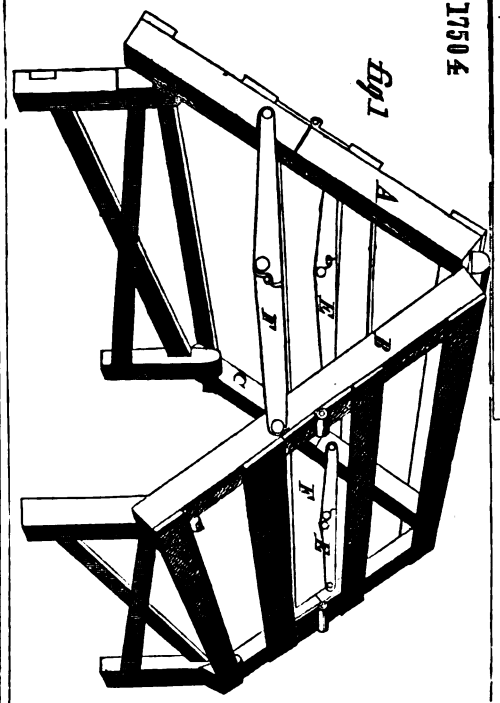

Fig 1

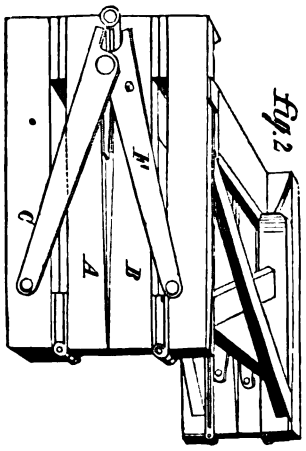

Fig. 2

17163

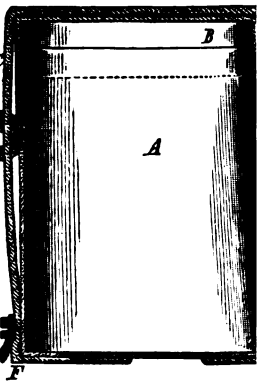

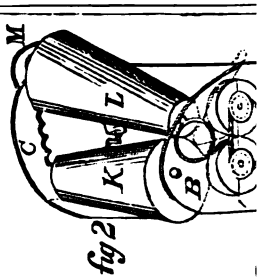

Fig 2

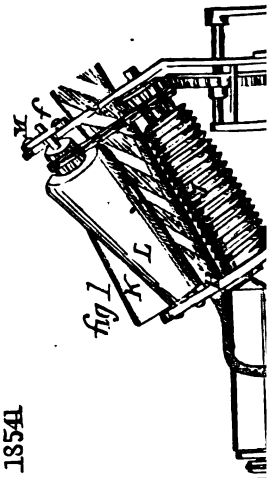

Fig 1

18541

18841

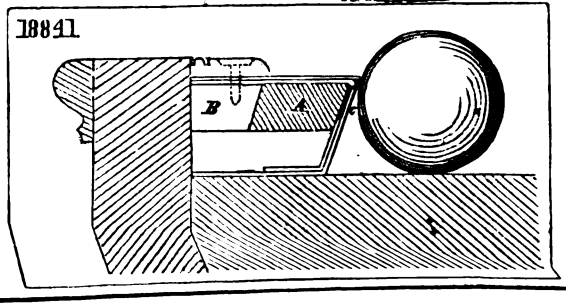

'06

fig 4

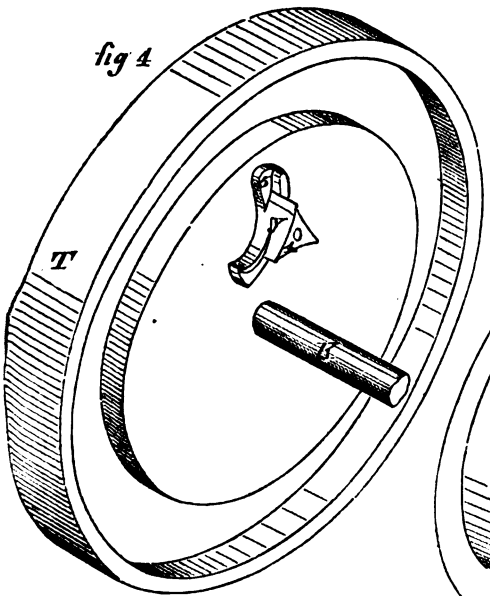

fig 5

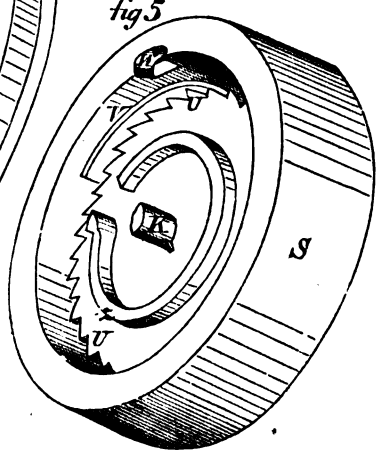

fig 6

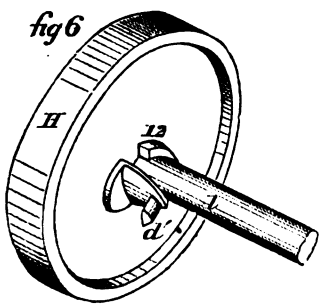

fig 7

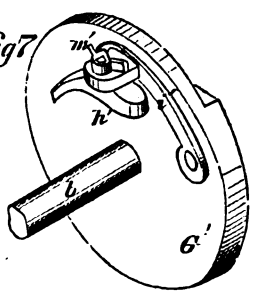

fig 1

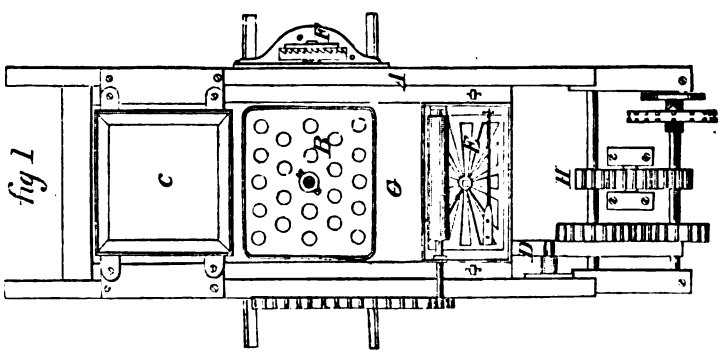

18706

ad18706

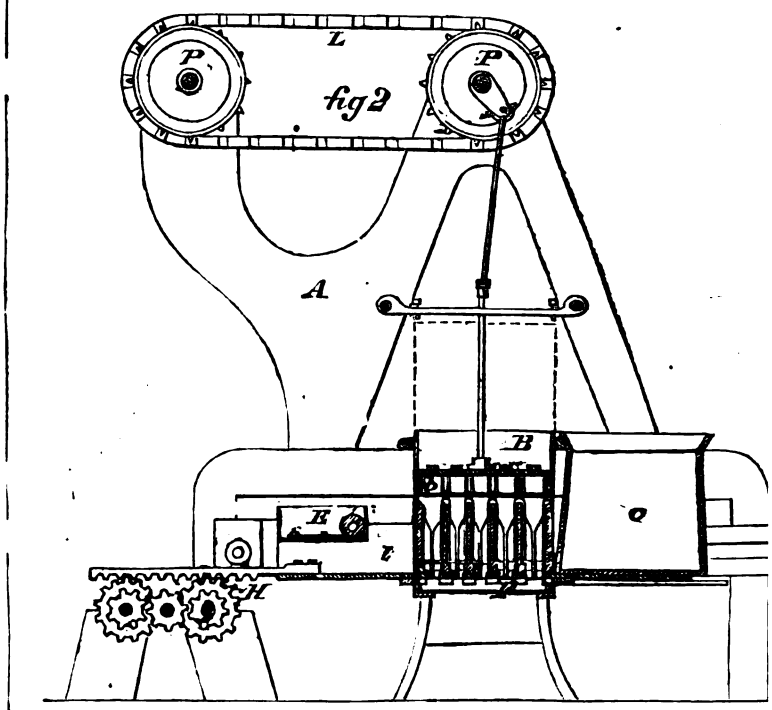

18706

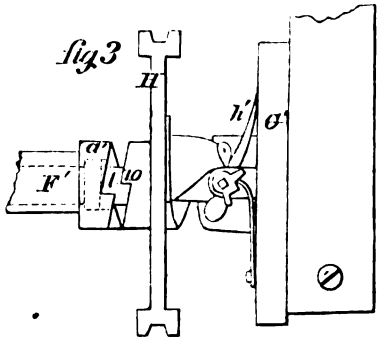

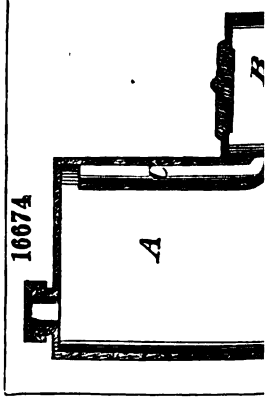

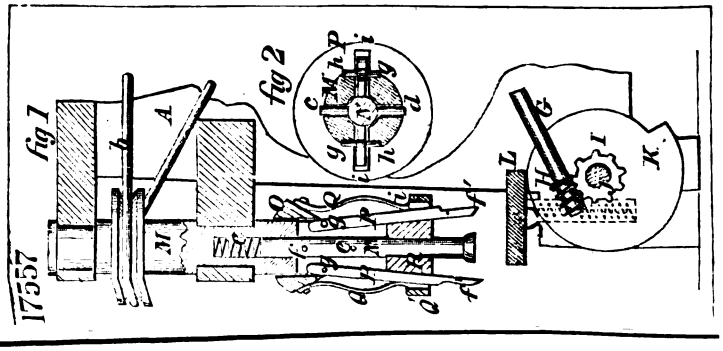

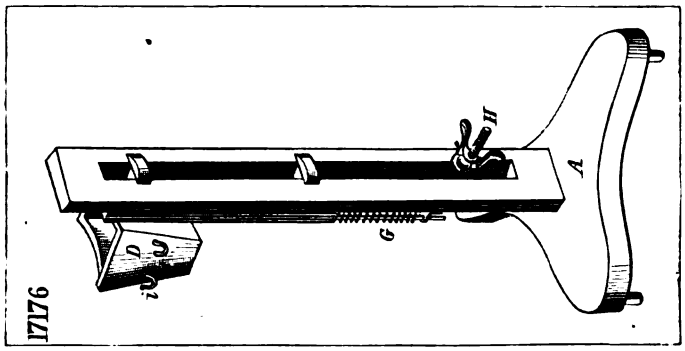

'295

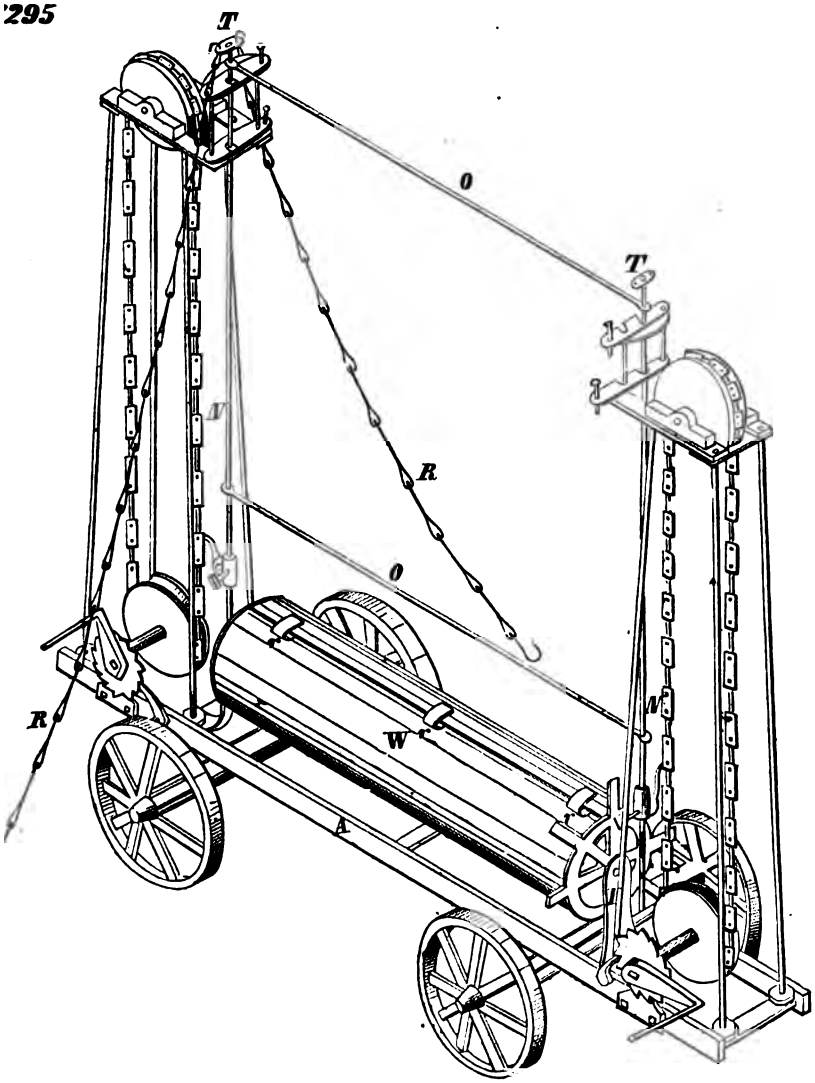

18262

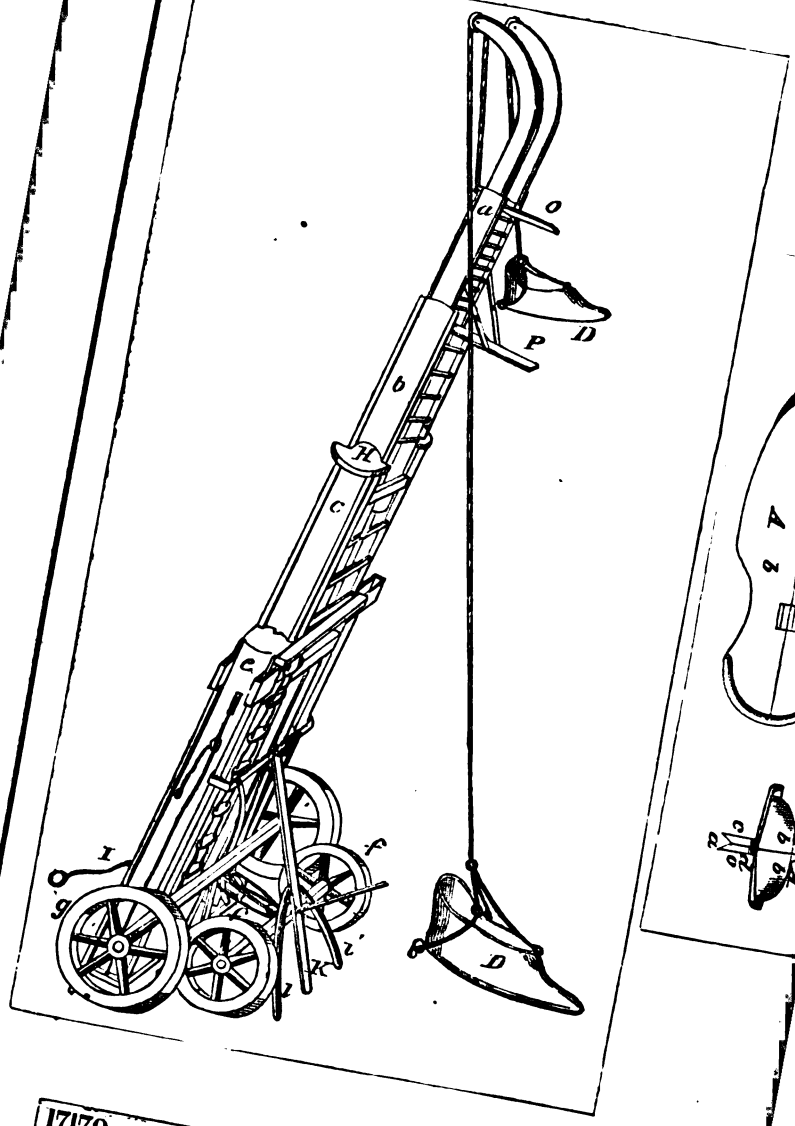

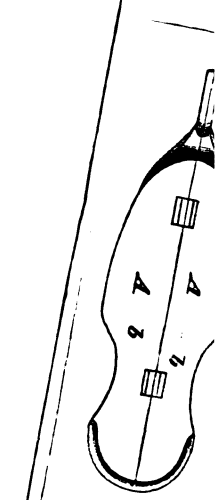

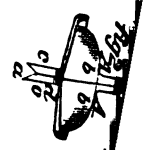

17179

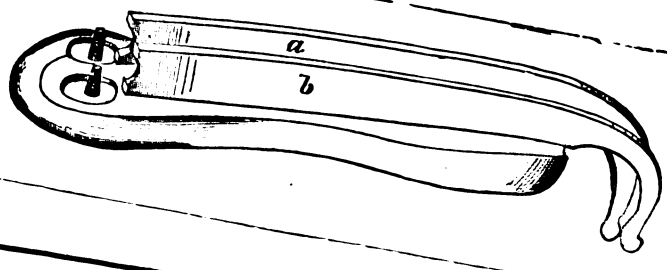

16653

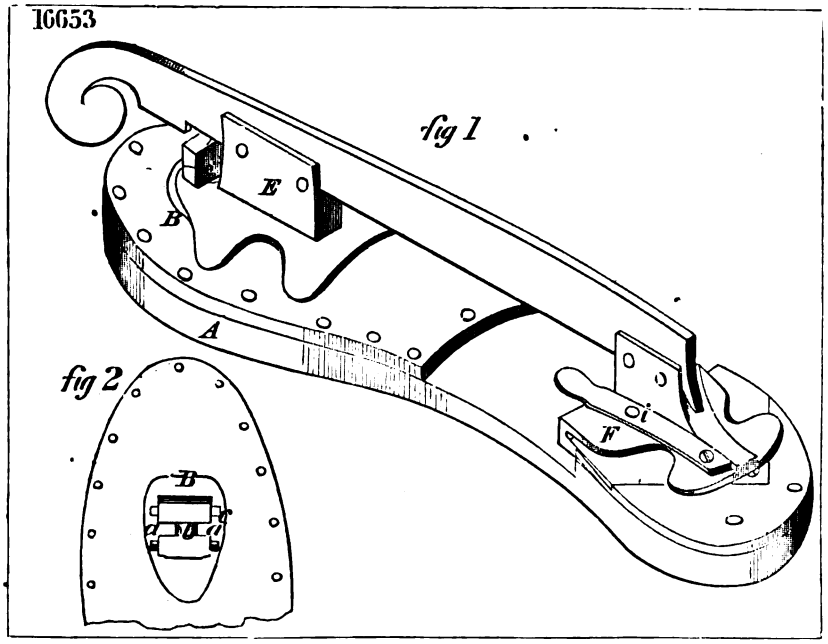

18552

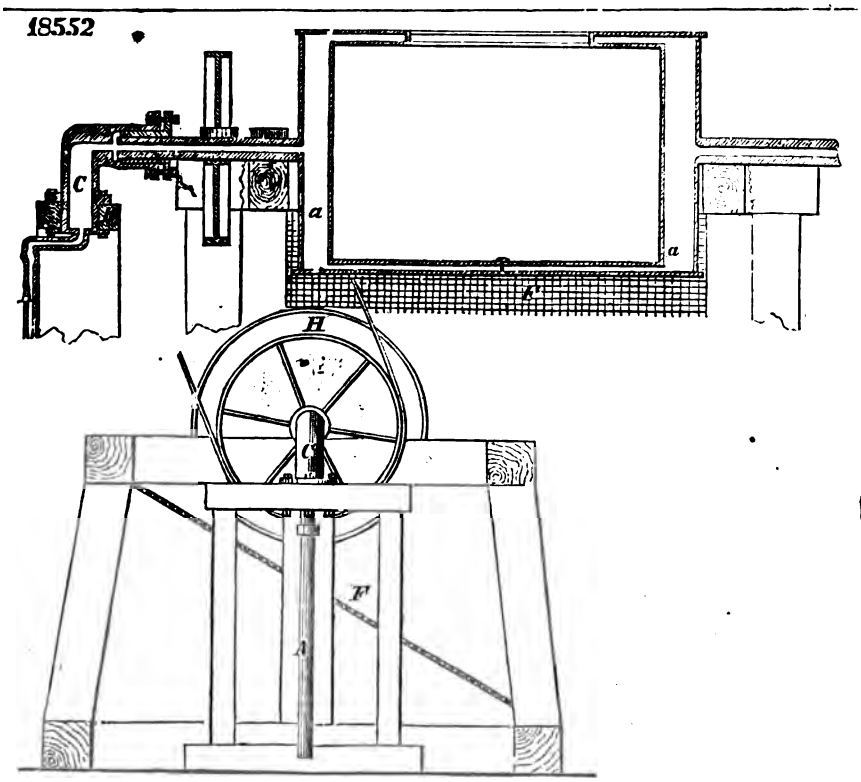

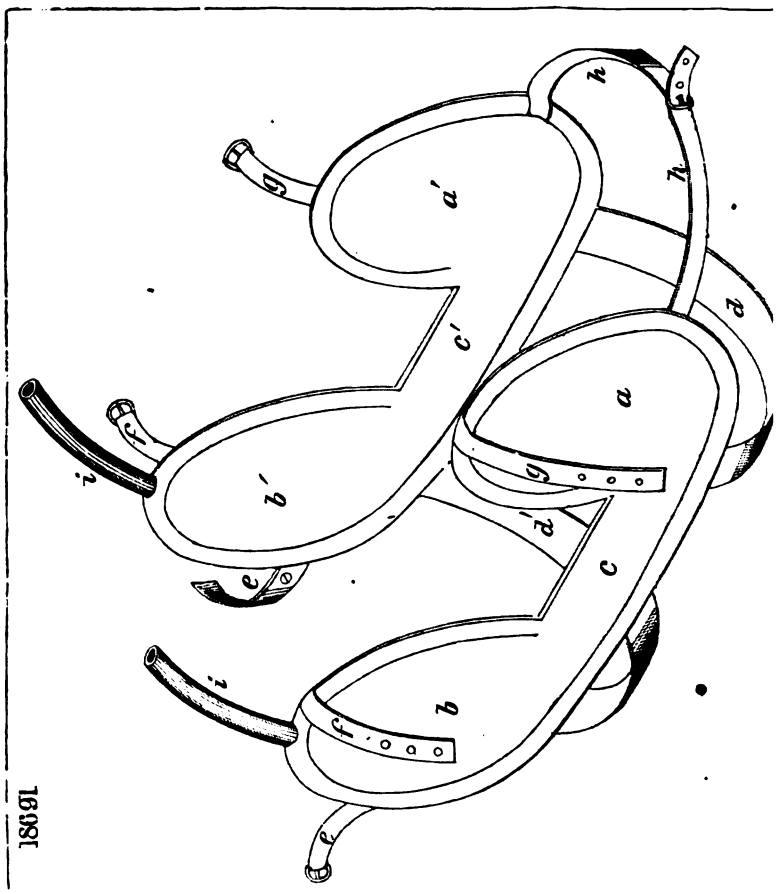
18691
a
a'
b
b'
c
c'
d
d'
e
f
g
h
i

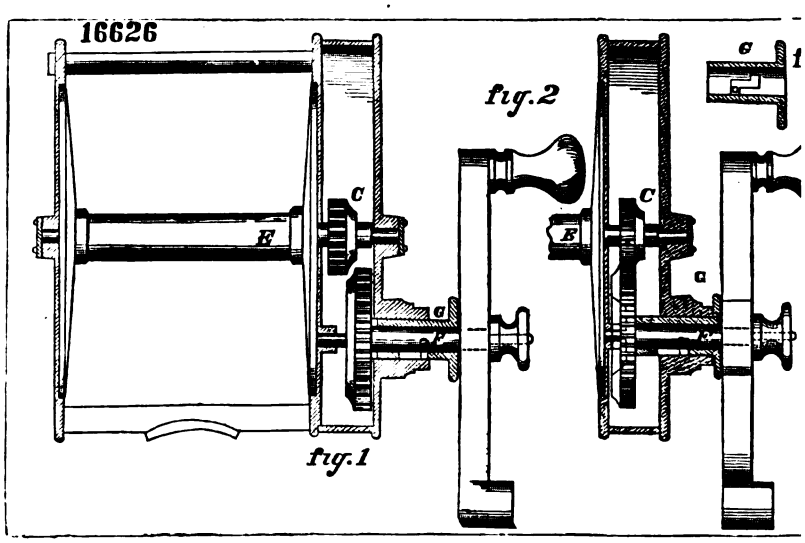
16626
fig.1
fig.2
C
E
G

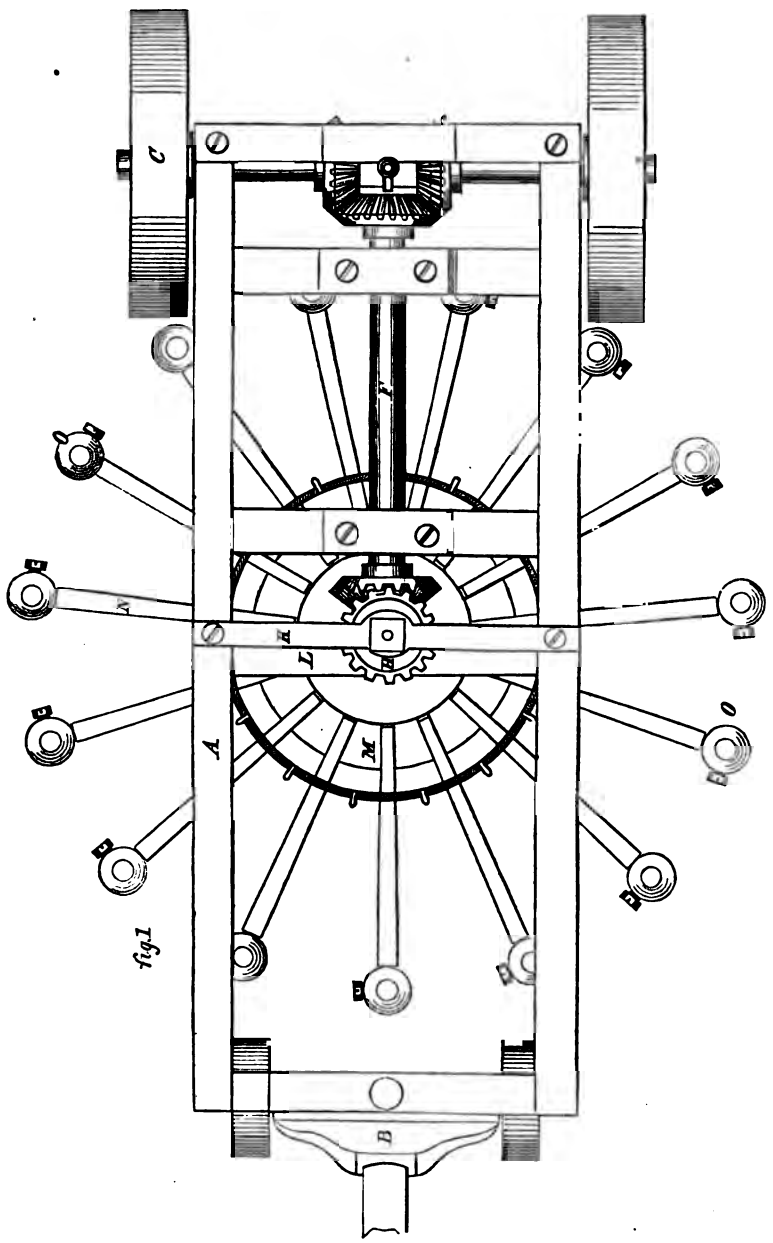

fig 1

pd18664

fig 2

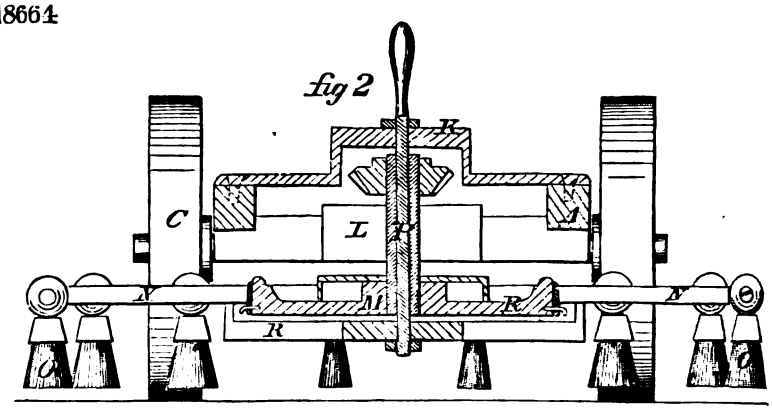

17316

fig 1

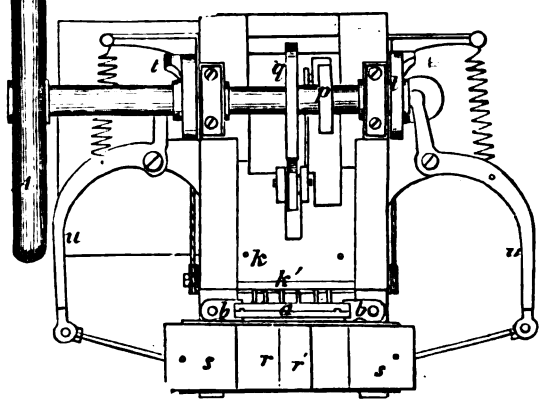

fig. 2

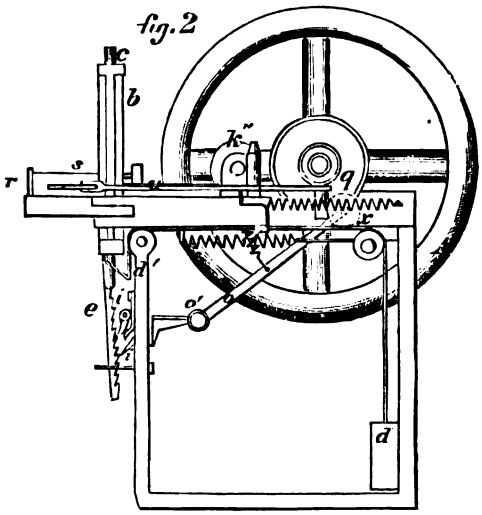

17297

fig. 3

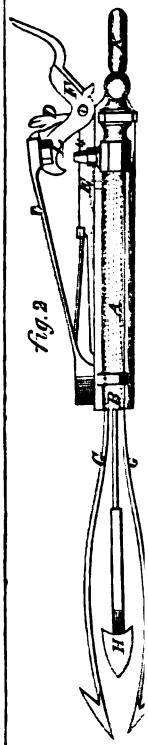

fig. 1

18416

fig 1

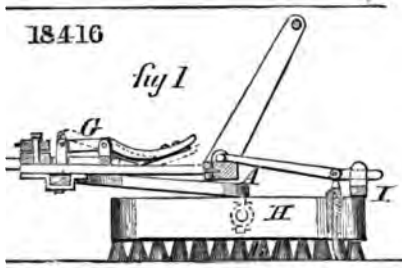

fig 2

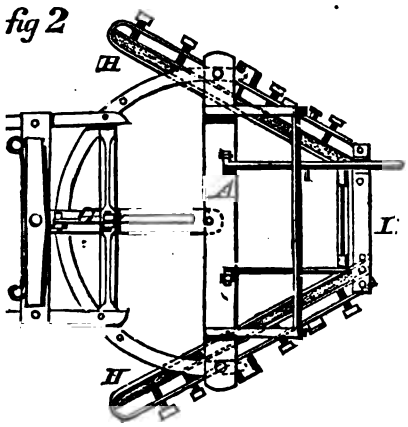

fig.3

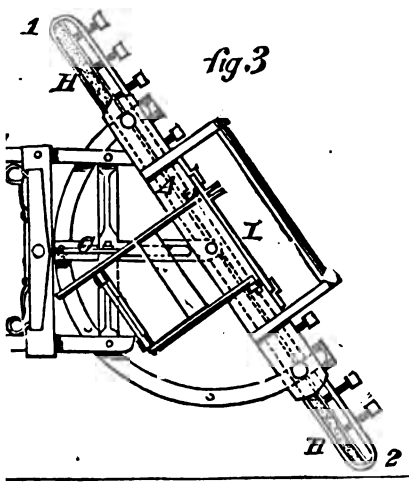

fig 2

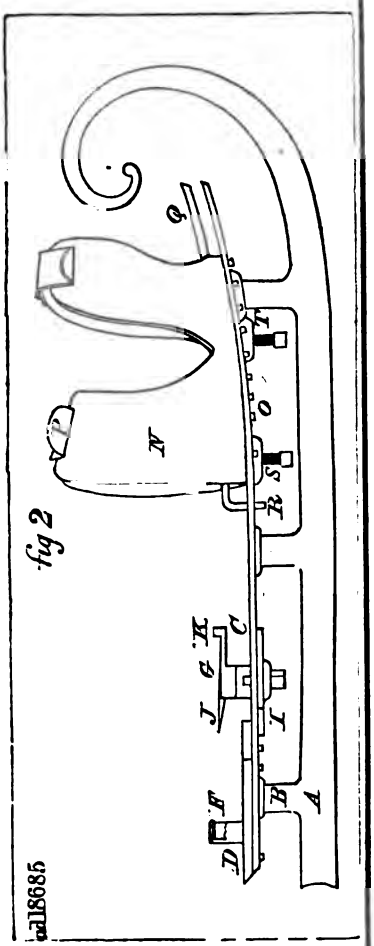

a18685

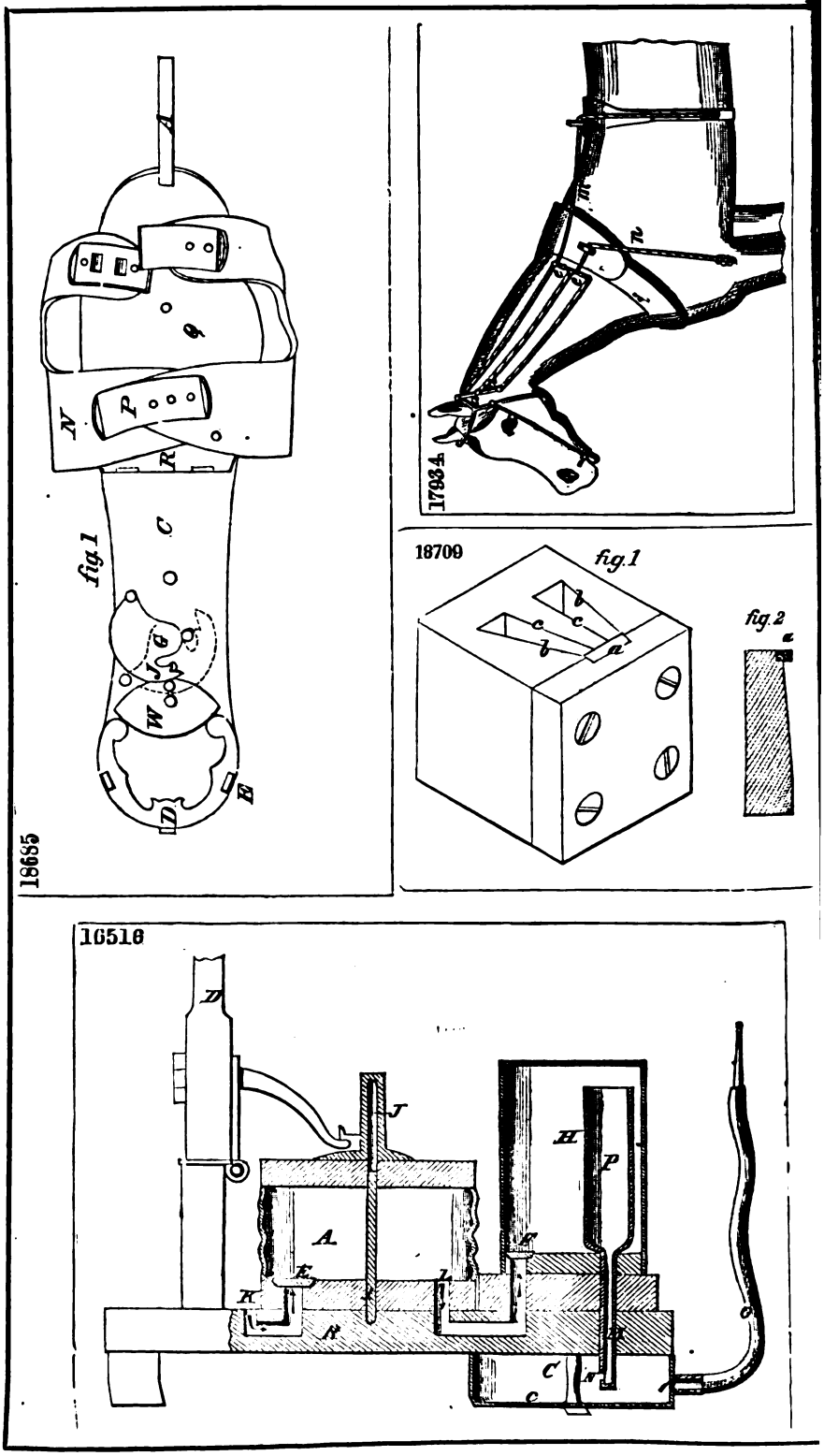
18685
fig.1
17934
18709
fig.1
fig.2
16516

17019

18273

18292

16466

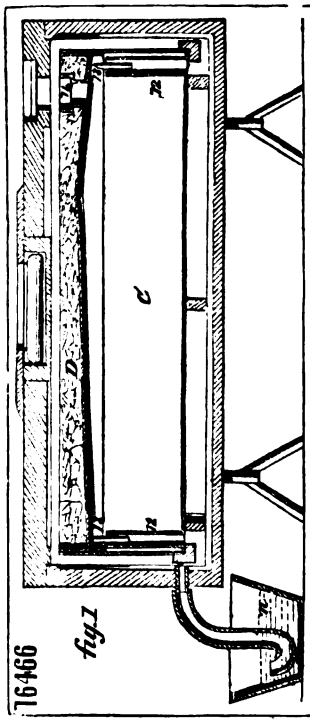

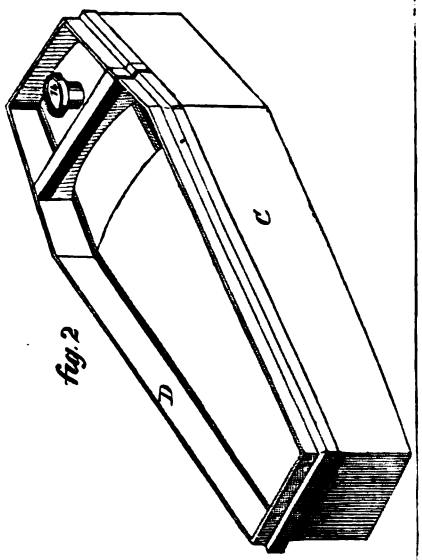

17263

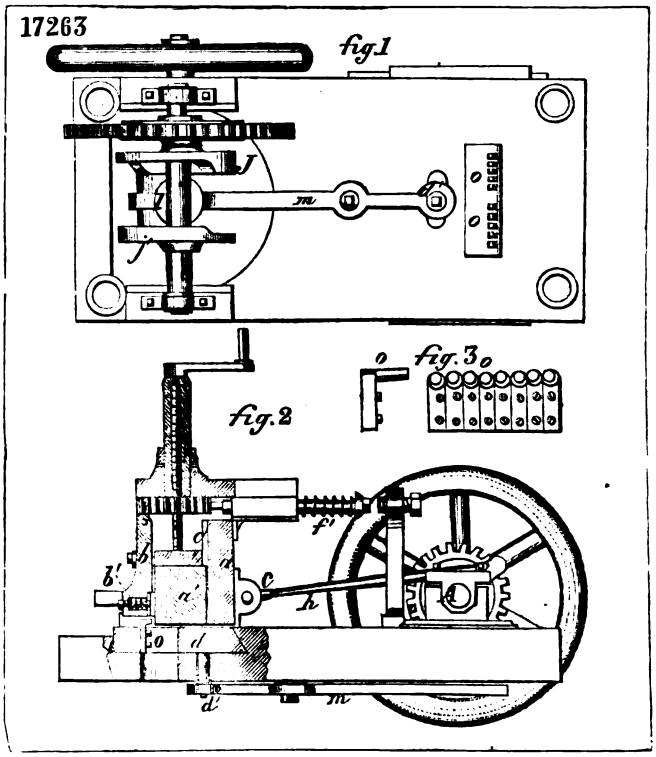

18092

fig. 1

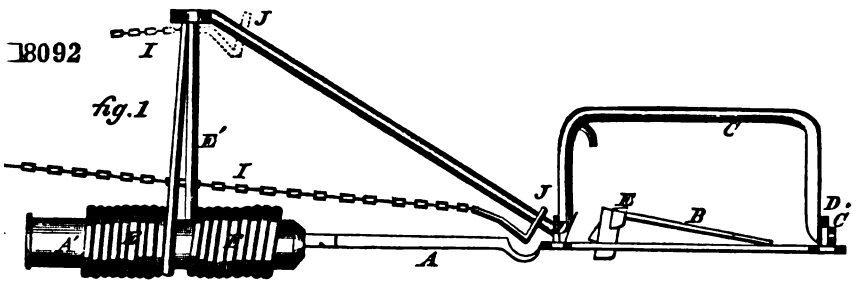

fig. 2

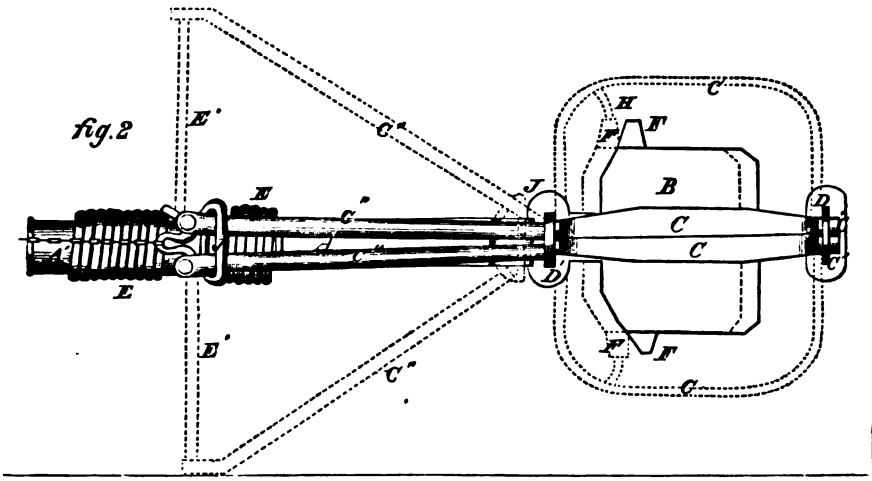

18195

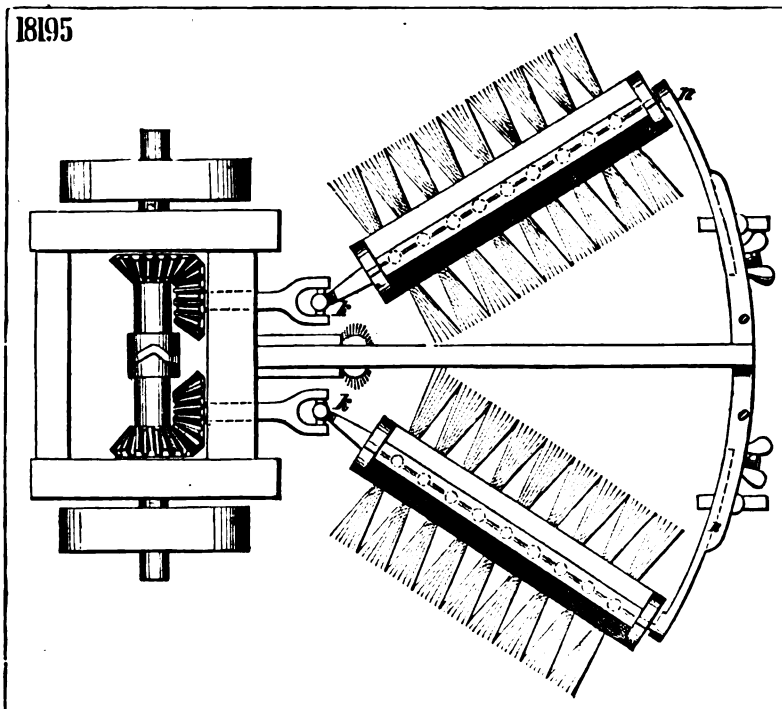

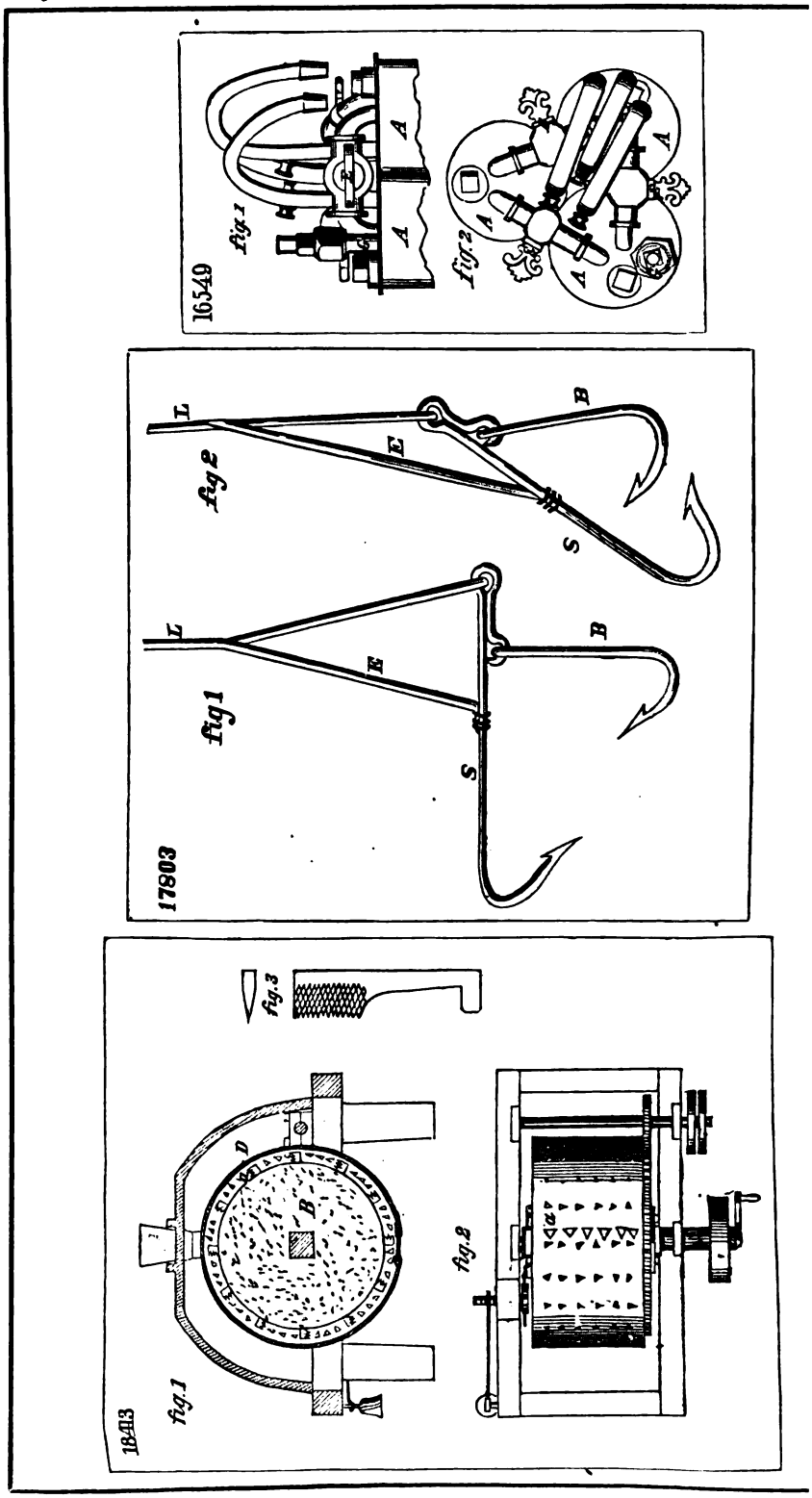
16549
fig.1
A
A
A
fig.2
A
A
A
17803
fig 2
L
E
B
S
fig 1
L
E
B
S
1843
fig.1
D
B
fig.3
fig.2

17406

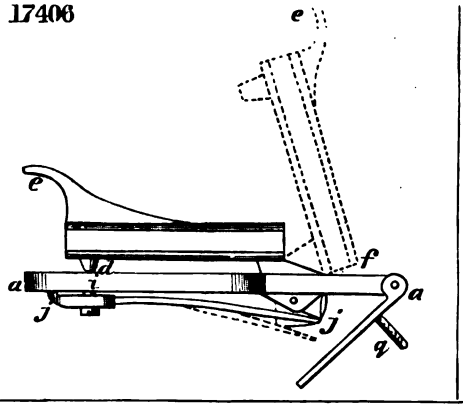

17570

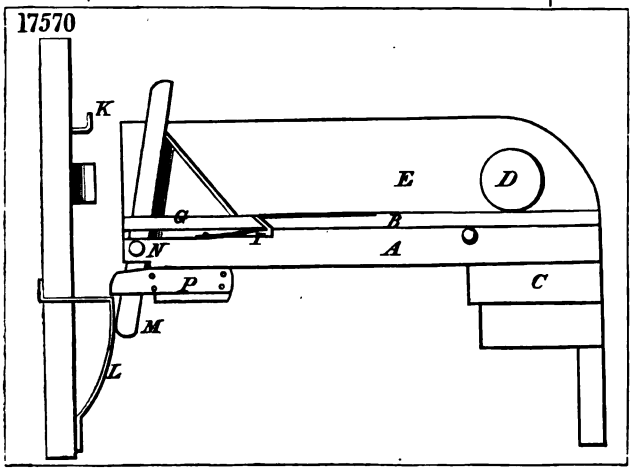

17469

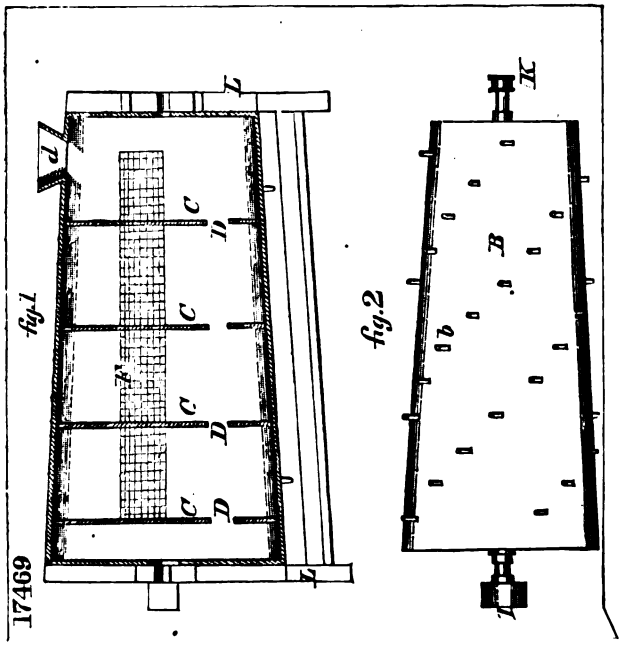

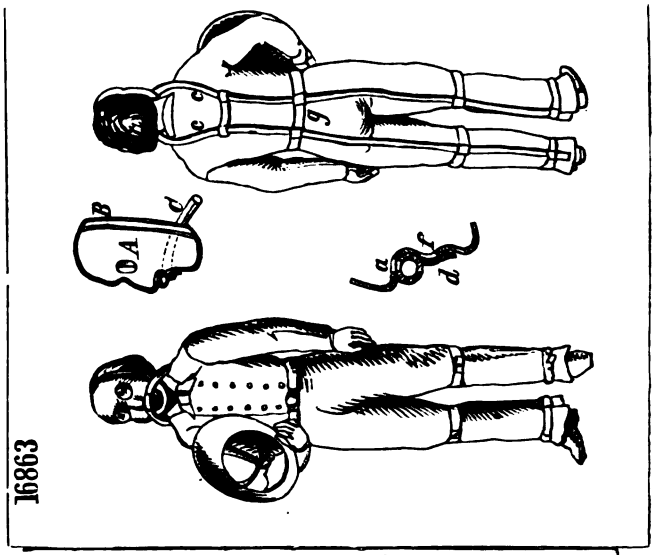
16863

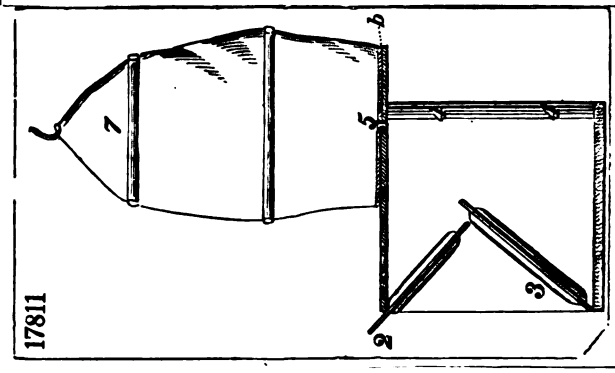
17811

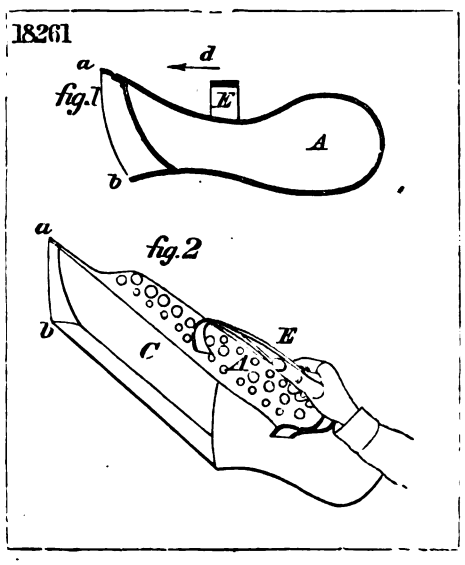
18261
fig.1
fig.2

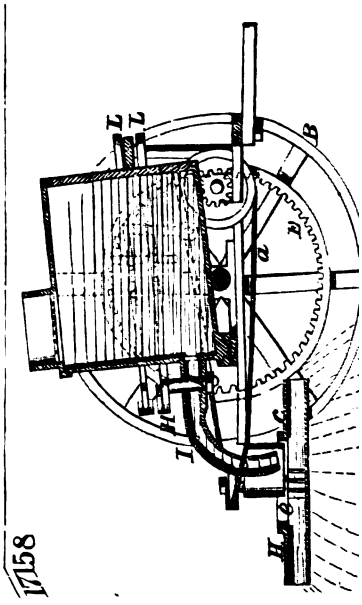
17158

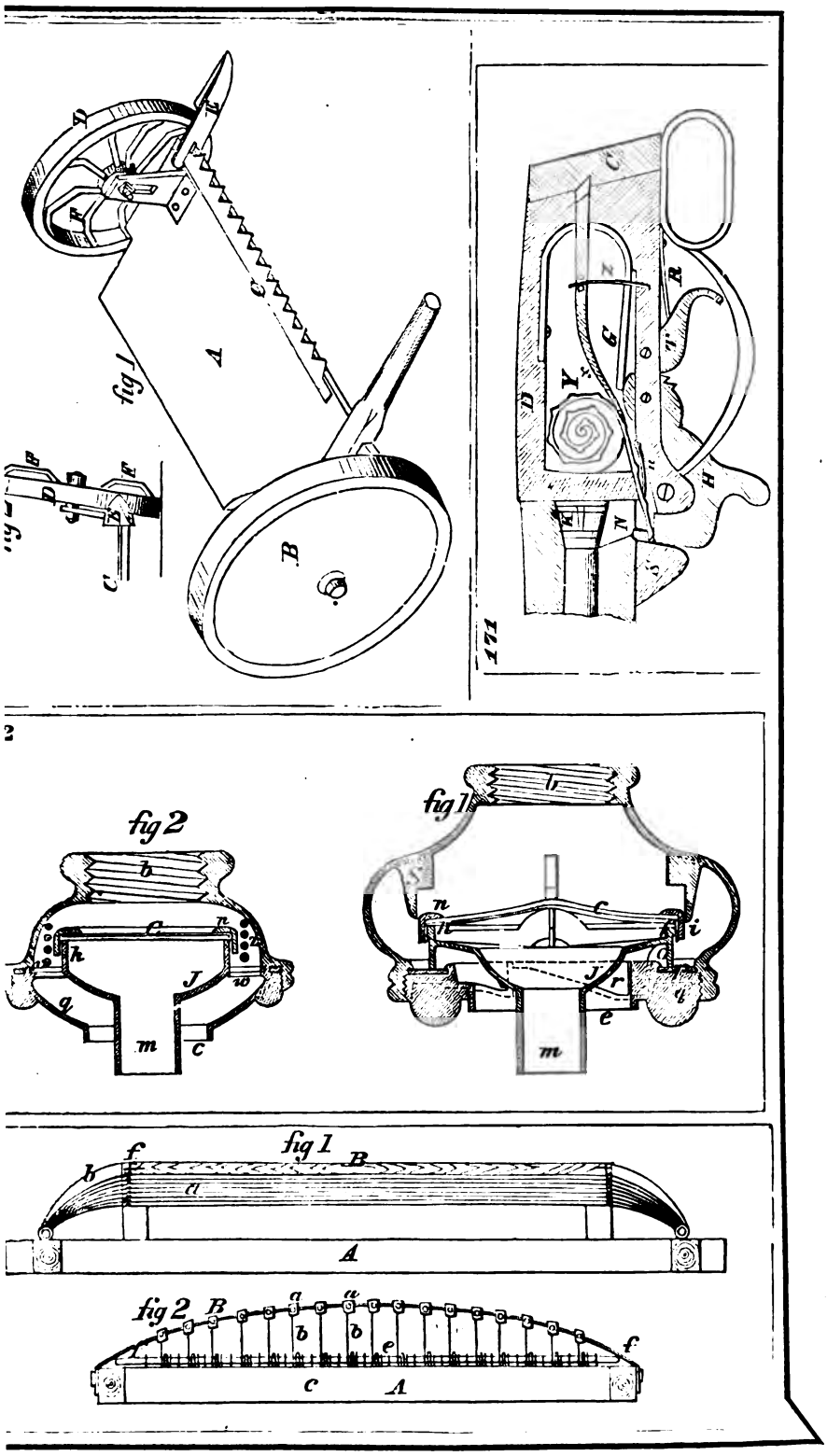
fig 1
fig 2
171
fig 1
fig 2
fig 1
fig 2

163

fig 1

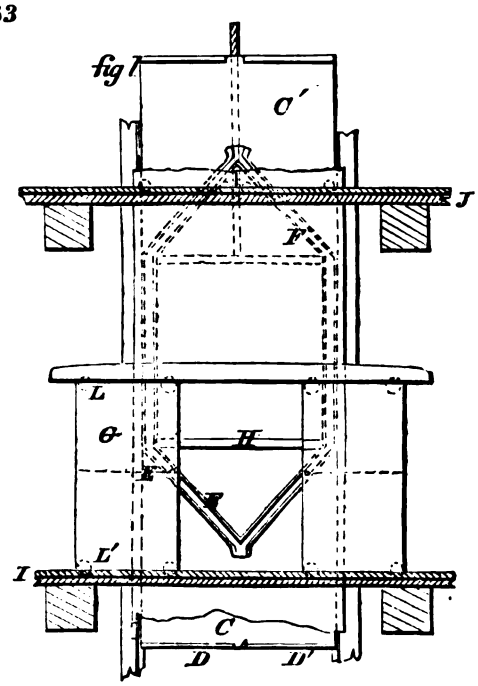

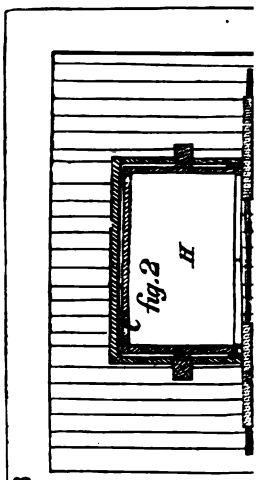

163

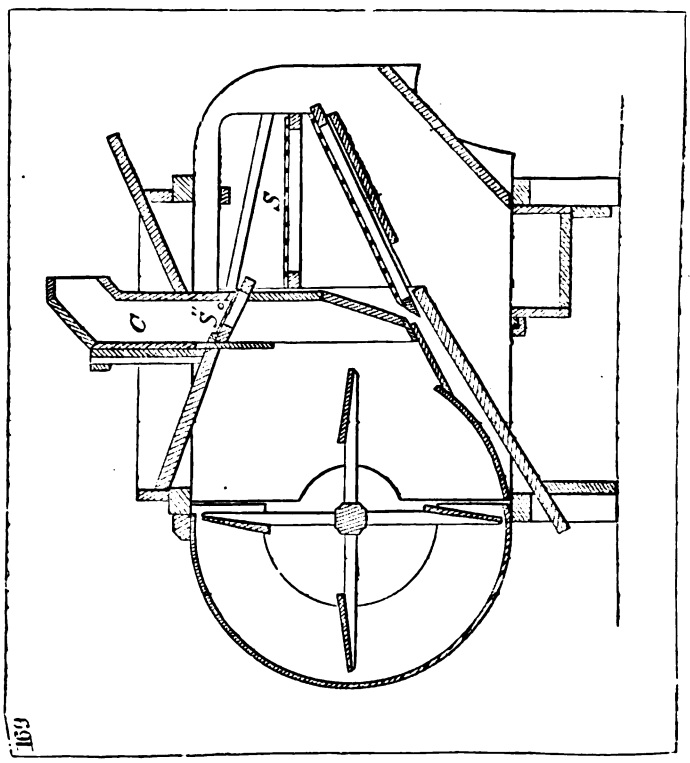

159

~~d164~~

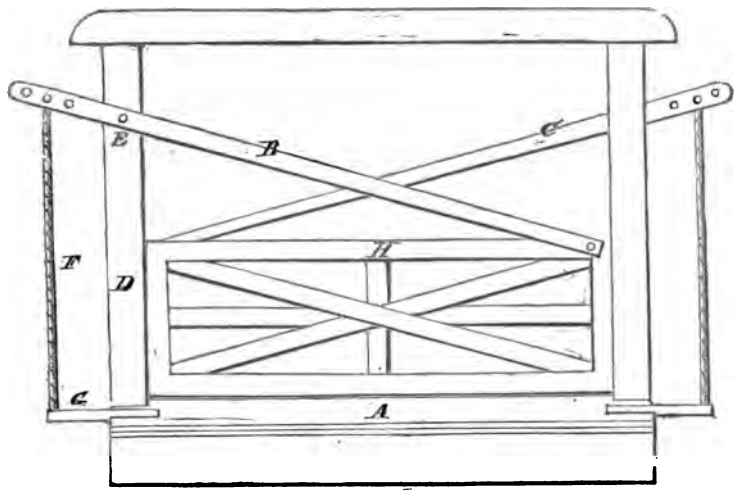

164.

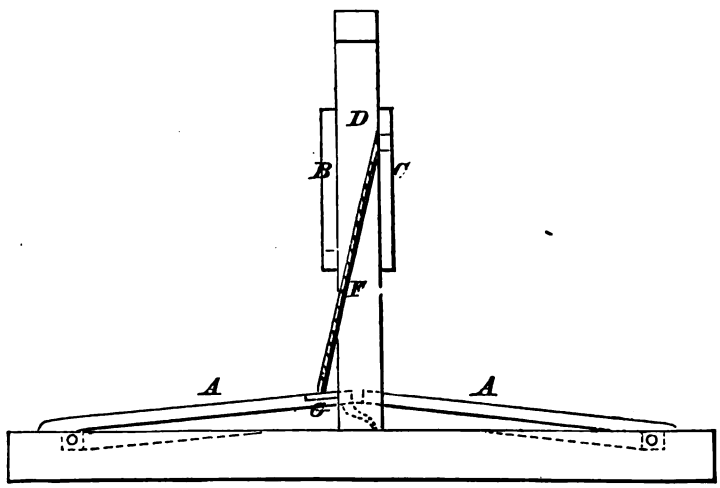

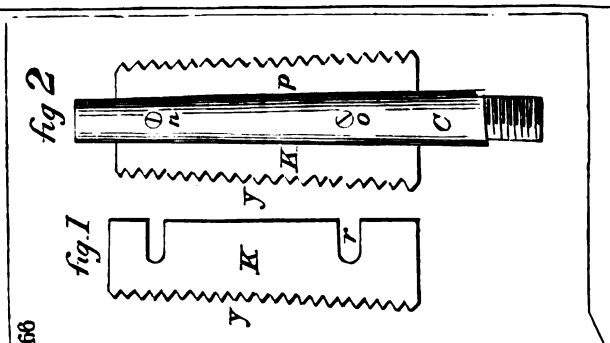

166

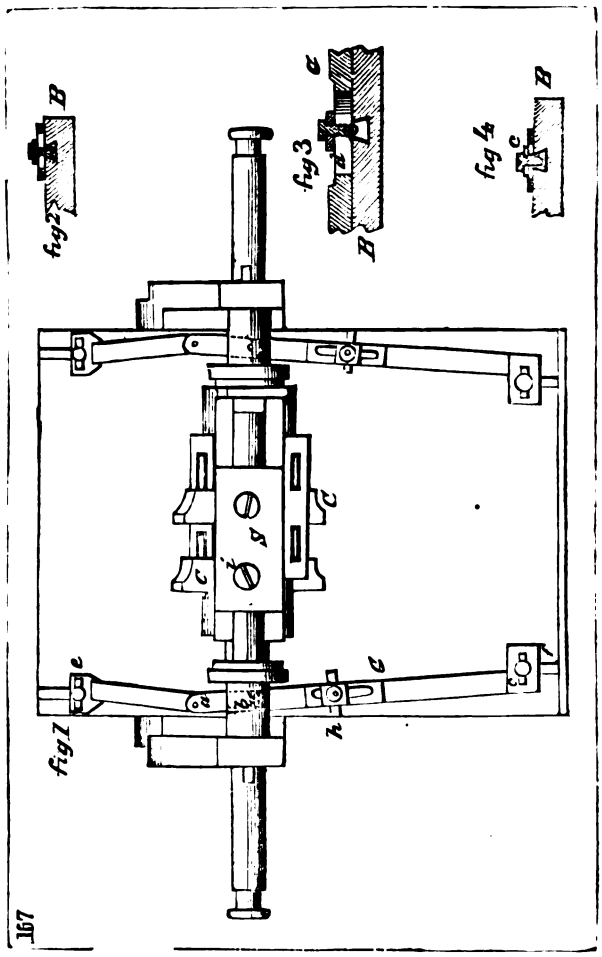
fig 1
fig 2
fig 3
fig 4
167

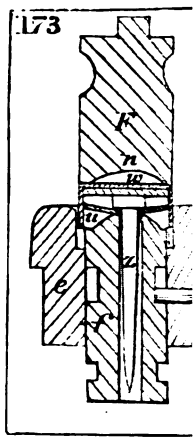
173

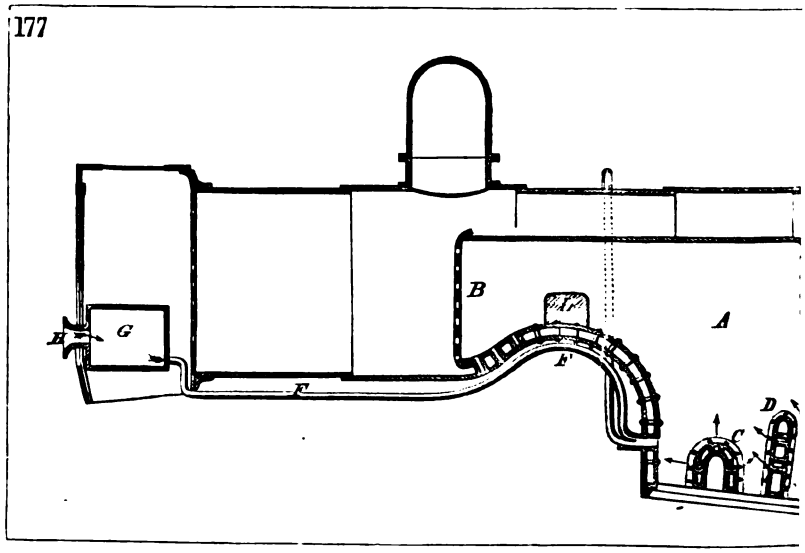
177
A
B
C
D
E
F
G

170

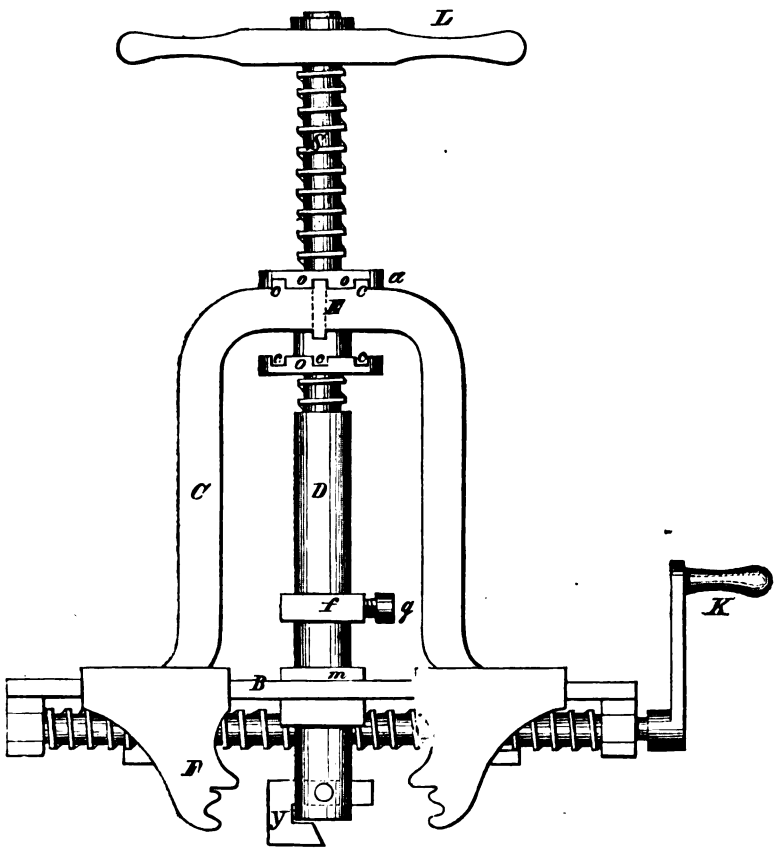

168

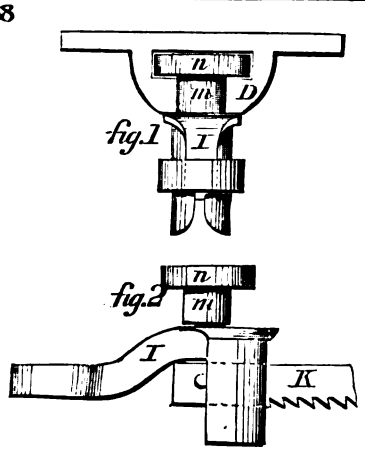

179

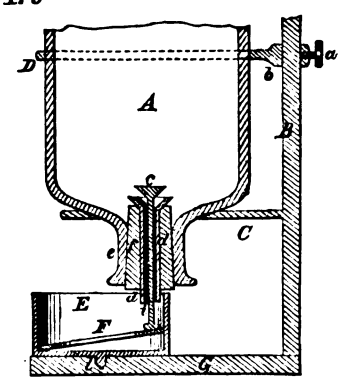

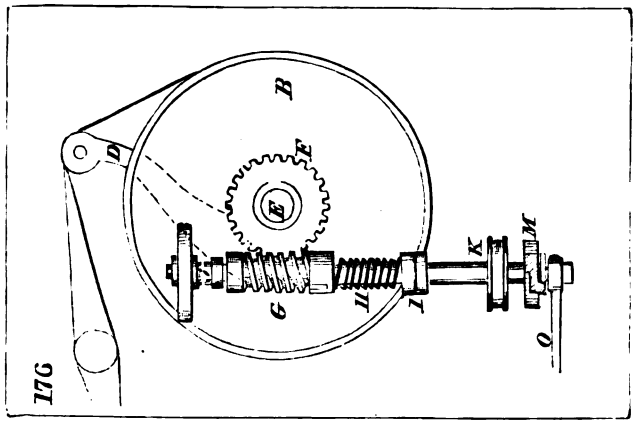

176

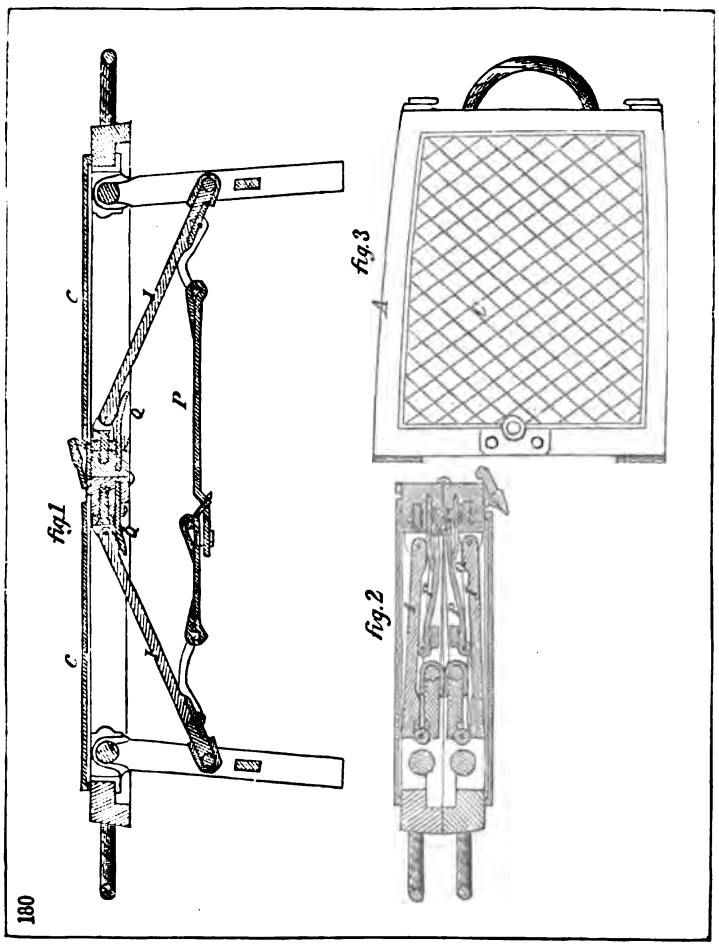

180

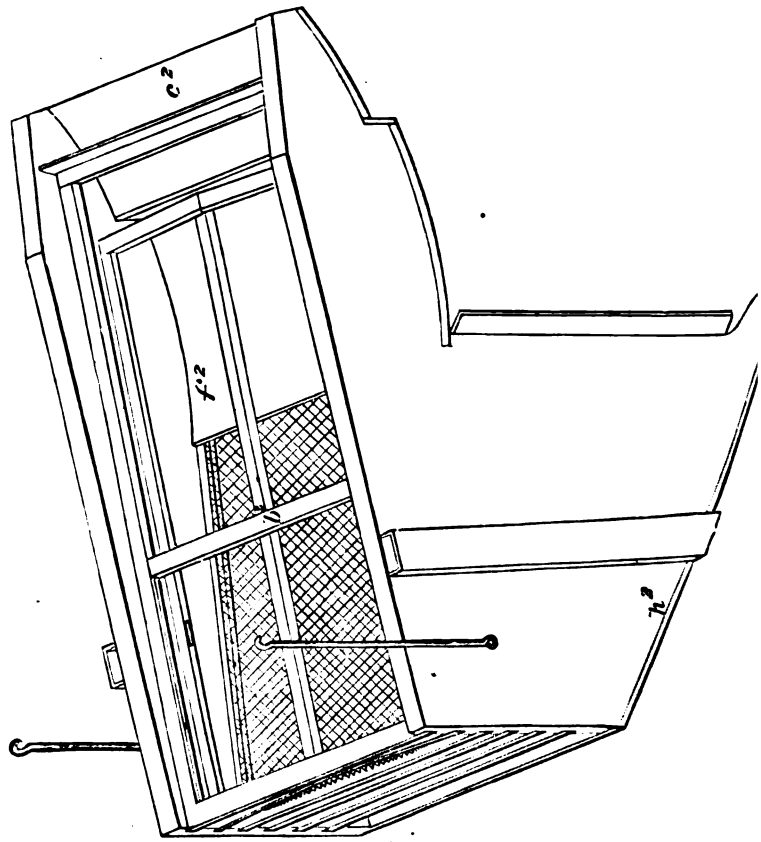

181

183

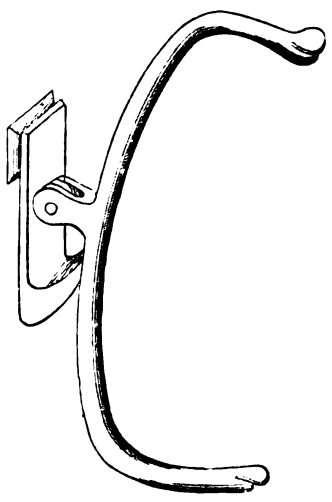

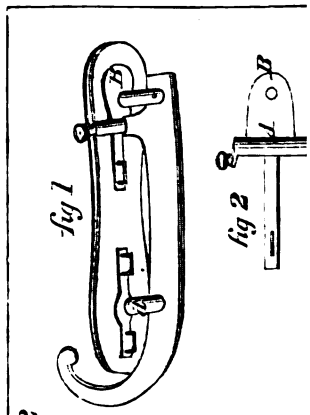

182

ADDITIONS AND CORRECTIONS.

ADDITIONAL DESCRIPTIONS AND CLAIMS.

I.—AGRICULTURE.

No. 18,604.—PHILIP C. ROWE, of Boston, Mass.—*Improvement in Mode of Protecting Trees from Canker Worms, &c.*—Patent dated November 10, 1857.—The claim and engravings explain the nature of this invention.

Claim.—The inventor says: I am aware that for such purposes an encircling plate or roof has been applied around the trunk of a tree; also, that cotton batting or loose fibrous material has been wound around and fixed to the body of a tree; consequently, I do not claim such means of preventing the ascent of canker worms.

But I claim my improved tree protector, made as described, viz., with the encircling roof or cover of metal or other suitable material, and one or more circular or surrounding fringes suspended from the said roof and around the tree, substantially as described.

V.—CALORIFICS.

No. 18,883.—GEORGE GRIGGS, of Roxbury, Mass., assignor to himself and WILLIAM A. BULLARD, of Dedham, Mass.—*Improvement in Locomotive Furnaces.*—Patent dated December 15, 1857.—The claim and engravings explain the nature of this invention.

The inventor says: I do not claim placing a hollow or water space fire bridge within a locomotive or other furnace; as such bridge, in whatever position or under whatever arrangement it may be used, will not accomplish the end which I have in view.

Neither do I claim the use of fire bridges of fire-brick, either with or without perforations, except when such bridges are arranged substantially as set forth.

But I *claim* the described arrangement of a fire-brick arch or shelf attached to the rear of a furnace, and extending horizontally or nearly so beneath and in front of the tube sheet, and over the fire towards the fire door, in such a manner as to form a combustion chamber immediately in front of the tube sheet, in which the smoke and gases, after passing over the heated surface of the bridge, are consumed, as set forth.

No. 17,085.—GEORGE GILMOUR, of Chelsea, Mass.—*Improvement in Messenger Shackle Blocks.*—Patent dated April 21, 1857.—In applying this shackle block to a cable chain under water, the roller B is first removed from the parts *c* by withdrawing bolt E so as to enable the chain to enter the passage D ; the roller B is then restored to its place, and the block is lowered down on the chain, the pressure of the chain against pawl *b* causing said pawl not only to slip freely on it, but to raise parts *c* so as to facilitate the passage of the block on the chain. As soon as the block has attained the required depth, the purchase rope may be operated so as to raise the block, causing pawl *b* to so pass between the links of the chain and rest against the roller B as to firmly clutch the block to the chain.

Claim.—The said messenger shackle block, or combination and arrangement of the sheaves or pulleys, the forked pawl, the rollers, and the chain space or passage, substantially as specified.

Also, hinging or jointing the parts *c c* and the pawl to the remainder of the frame, in order that the roller and pawl may be turned towards the sheaves of the pulley, as specified.

IX.—LAND CONVEYANCE.

No. 16,696.—JOHN SEELY, of Buffalo, N. Y.—*Improvement in Floating Sectional Dry Docks.*—Patent dated February 24, 1857.—As the water is discharged, the dock would be liable to sway to and fro, and rise unlevel. This is to be prevented by the use of the braces K, which turn upon centres which are in line with the centres of the tubular hinges *a a b.*

The inventor says: I do not intend to be limited to the particular dimensions given of the several parts of my improvements, as these dimensions and proportions may be varied as circumstances may demand. I do not intend to be limited to the use of a dip wheel for discharging the water from the docks, when circumstances shall render it more favorable to use pumps for the same purpose.

I do not claim the several parts described except the tubular hinges, when used independent of the several combinations described.

First. I *claim* the combination of the conducting pipe *e c d* with the tubular hinges *a a b*, and sectional dock D, substantially as set forth.

Second. I claim the combination of the parallel braces K K turning upon joints *t t*, with the floating docks D D and the wheel pit W, for the purposes set forth.

XXI.—WEARING APPAREL.

No. 17,573.—HORACE HARRIS, of Newark, N. J.—*Improvement in Safety Pockets.*—Patent dated June 16 1857.—The chains *h* are secured within the lining of the garment, and are for the purpose of

preventing the pocket from being cut out. The pocket can be opened by pulling chain F, which will withdraw clasp I from wire *c*; and the pocket is shut by the simple pressure on it, which will bring wire *c* within clasp D, the spring E serving to press said clasp on the two wires which constitute the mouth frame of the pocket.

The inventor says: I am aware that Joseph Patton has a patent for "spring bolt and catch" for fastening "plates" connected with pockets. I do not use or claim any of his devices.

I *claim* wire frame with the spring *c* for throwing it open, constructed in the manner described.

XXII.—MISCELLANEOUS.

No. 17,179.—JOHN A. WINSLOW, of Roxbury, Mass.—*Improvement in Skates.*—Patent dated April 28, 1857.—The nature of this invention will be understood by reference to the claim and engraving.

Claim.—The application of a second metal runner to the skate, which being placed on the bottom, outside of the central line of axis, and the runner in the ordinary skate, which lies along that line, removed to a correspondent position on the other side, completes the improvement.

CORRECTIONS.

I, p. 194, insert: *Trees, mode of protecting from worms.*—PHILIP E. ROWE.—Boston, Mass.—November 10, 1857.

Vol. I, p. 231, insert: *Dry dock, floating sectional.*—JOHN SEELY, Buffalo, N. Y.—February 14, 1857.

297, strike out description 18,497, which will be found in its proper place. And so of the rest.

302, strike out description 17,797.

303, strike out description 18,326.

314, transfer description 18,652 to p. 439.

329, for Aurora, N. Y., read Avon, N. Y.

345, strike out description 18,997.

353, strike out description 16,731.

358, strike out description 17,355.

367, strike out description 18,140.

370, strike out description 18,109.

374, for Silas T. Randall, read Silas G. Randall.

380, strike out description 18,525.

383, strike out description 18,594.

391, for Jaockson Grham, read Jackson Gorham.

398, for Hardenburg, read Hardenbergh.

398, for Henlings, read Heulings.

430, strike out description 16,864.

441, strike out description 18,458.

449, strike out description 17,642.

456, strike out description 17,792.

468, for Snead, read Smead.

469, strike out description 18,582.

479, for Page, read Paye.

482, for Browne, read Bourne.

498, for Snead, read Smead.

522, for Aperly, read Apperly.

528, for Cromwell, read Cornwall.

Vol. II, p. 51, strike out description 17,017.

55, strike out description 18,085.

56, strike out description 16,995.

300, for 16,665, read 16,655.

348, for 16,374, read 16,347.

357, for 16,566, read 16,556.

503, strike out description 17,553.

521, strike out description 17,147.

NOTE.—In instances other than those here noted, where a name is spelt differently in the Lists and in the Descriptions, the correct spelling will be found in the Descriptions.

INDEX

TO THE

ESCRIPTIONS AND ILLUSTRATIONS.

	Invention or Discovery.	Text.	Plates.
4	Door-Spring	I, 438	III, 19
5	Grinding-Mill	II, 236	III, 548
6	Cross-Cut Sawing-Machine	II, 289	III, 627
7	Bullet-Mould	II, 465	III, 864
8	Bosom Studs	II, 505	III, 893
9	Fire Hook	I, 624	III, 221
0	Attaching Filters to Supply-Pipes	II, 175	III, 471
1	Machine for Upsetting Tire	I, 489	III, 95
2	Mortising-Machine	II, 267	III, 596
3	Velocimeters for Vessels	II, 66	III, 335
4	Rotary-Shears	I, 495	III, 97
5	Manufacture of Animal Traps	II, 525	III, 909
6	Travelling Trunks	II, 360	III, 727
7	Forming Joints for Sheet Metal	I, 470	III, 58
8	Hats	I, 527	III, 125
9	Adjusting Circular Saws to any required Dish	II, 300	III, 649
0	Folding Umbrella	II, 507	III, 893
1	Weather-Strips for Doors, Windows, &c	II, 92	III, 369
2	Raking Attachment for Reapers	I, 400	II, 737
3	Metallic Cross-Ties and Chairs for Railroads	II, 117	III, 404
4	Maintaining Power for Time-Pieces	II, 83	III, 352
5	Riding-Saddle	II, 356	III, 741
6	Self-Regulating Wind-Director for Wind-Mills	II, 202	III, 512
7	Buckles	II, 348	III, 717
8	Air-Heating Furnace	I, 627	III, 220
9	Ships' Cooking Stove	I, 654	III, 239
0	Extension Tables	II, 393	III, 791
1	Valves for Steam Engines	II, 35	III, 296
2	Rudder	II, 52	III, 319
3	Carriage	II, 153	III, 444
4	Loom	I, 534	III, 140
5	Tanning Hides	II, 359	
6	Anchor	II, 40	III, 304
7	Constructing Stalls for Horses	II, 125	III, 411
8	Operating Slide-Valves of Steam Engines	II, 38	III, 302
9	Instrument for Measuring Boards	II, 74	III, 355
0	Artificial Leg	II, 493	III, 885
1	Milking-Shield	II, 495	III, 882
2	Reducing Zinc Ores	I, 6.2	III, 208
3	Cop Tubes	I, 501	III, 97
4	Cultivator Teeth	I, 306	II, 594
5	Hemp-Brakes	I, 528	III, 134
6	Pump	II, 186	III, 487

No.	Invention or Discovery.	Text.	Plates.
16,428	Steam-Pressure Gauge	II, 17	III, 266
429	Guides for Sewing-Machines	I, 573	III, 173
430	Machine for Making Paper	I, 545	III, 155
431	Machine for Forming Bats for Felting	I, 521	III, 118
432	Centre-Vent Water-Wheel	II, 199	III, 499
433	Artificial Teeth	II, 497	III, 888
434	Sewing-Machine	I, 554	III, 162
435	Sewing-Machine	II, 287	III, 622
436	Sewing-Machine	I, 555	III, 162
437	Manufacture of Double-pile Carpets and Rugs	I, 510	III, 113
438	Treating Photographic Pictures	II, 426	.....
439	Grain Separator	II, 229	III, 539
440	Die for Making Spikes	I, 434	III, 4
441	Harvester	I, 321	II, 629
442	Cutter for Harvesters	I, 333	II, 622
443	Machine for Paring Apples	II, 363	III, 743
444	Blast Furnace	I, 442	III, 26
445	Harvester	I, 321	II, 615
446	Bridge	II, 86	III, 364
447	Winnowing-Machine	I, 422	II, 772
448	Hydrant	II, 178	III, 474
449	Brick-Machine	II, 327	III, 697
450	Hose-Coupling	II, 178	III, 473
451	Reflectors for Vaults	II, 129	III, 415
452	Cordage-Machine	I, 514	III, 117
453	Machine for Bending Timber	II, 319	III, 685
454	Feeding Lumber laterally in Sawing-Machines	II, 294	III, 631
455	Cooking-Stove	I, 651	III, 244
456	Machine for Bending Sheet Metal	I, 470	III, 55
457	Roofing-Cement	II, 334	.....
458	Steam and Pressure Gauges	II, 19	II, 267
459	Radiators for Fireplace Grates	I, 645	III, 236
460	Stone-Grooving Machine	II, 340	III, 694
461	Machine for Shearing Sheep	I, 413	II, 761
462	Machine for Trimming Hedges	I, 345	II, 672
463	Speeder	I, 575	III, 191
464	Sash-Fastener	I, 488	III, 76
465	Inserting Buckets in Shafts of Water-Wheels	II, 199	III, 498
466	Corpse-Preservers	II, 516	III, 910
467	Calash Carriage Top	II, 150	III, 442
468	Rotary Brick-Machine	II, 332	III, 694
469	Machine for Hulling Rice	I, 347	II, 661
470	Clamp for Soldering Spectacles	I, 432	III, 18
471	Grain Separator	II, 230	III, 541
472	Tailors' Measures	II, 506	III, 893
473	Apparatus for Blasting Rocks under Water	II, 85	III, 360
474	Feed-Box of Bee-Hives	I, 296	II, 580
475	Fastenings for Hames	II, 350	III, 719
476	Machine for Fallowing Land	I, 314	II, 607
477	Repeating Fire-Arm	II, 480	III, 873
478	Vaccinating-Instrument	II, 500	III, 888
479	Spring-Lancet	II, 493	III, 882
480	Making Illuminating Gas	I, 610	III, 205
481	Cutting Sheet Metal	I, 469	III, 61
482	Mounting of Artificial Teeth	II, 497	III, 886
483	Machine for Making Coiled Springs	I, 496	III, 103
484	Harvester	I, 321	II, 630
485	Acoustic Auricle	II, 489	III, 887
486	Constructing Fence-Posts	II, 103	III, 387
487	Raising Sunken Vessels	II, 65	III, 333
16,488	Cotton-Gin	I, 516	III, 120

No.	Invention or Discovery.	Text.	Plates.
16,489	Keyed Harp	II, 412	III, 805
490	Compound Rail for Railroads	II, 114	III, 400
491	Life-Boat	II, 43	III, 311
492	Self-Regulating Wind-Mill	II, 201	III, 506
493	Lath Machine	II, 264	III, 591
494	Cotton-press	II, 220	III, 531
495	Ore-Cleaner	I, 480	III, 78
496	Writing-Pen	II, 423	III, 816
497	Hernial-Truss	II, 499	III, 887
498	Harrow	I, 319	II, 613
499	Axle-Box	II, 134	III, 421
500	Composing-Stick for Printers	II, 435	III, 824
501	Oil Can	II, 209	III, 516
502	Core-Boxes	I, 433	III, 16
503	Altering Flint-Lock Fire-Arms to Percussion	II, 476	III, 870
504	Machinery for Stripping the Top Flats of Carding Engines.	I, 508	III, 111
505	Machine for Forging Metal	I, 468	III, 58
506	Champing-Machine	I, 433	III, 15
507	Nut-Machine	I, 478	III, 76
508	Mill for Tempering Oleaginous Seeds	II, 242	III, 561
509	Machine for Hulling and Separating Cotton Seeds	I, 346	II, 671
510	Spporting Masts in the Decks of Vessels	II, 62	III, 333
511	Seeding Machine	I, 406	II, 748
512	Door-Spring	I, 437	III, 20
513	Machine for Planing Hoops	II, 275	III, 607
514	Fountain Pen	II, 423	III, 817
515	Operating the Valves of Steam Hammers	II, 33	III, 302
516	Vermin Destroyer	II, 526	III, 908
517	Machine for Paring and Slicing Apples	II, 362	III, 744
518	Attachment to Sewing-Machine	I, 556	III, 163
519	Excavating and Dredging-Machine	II, 97	III, 378
520	Safety Coupling for Railroad Cars	II, 158	III, 451
521	Filing Saws	I, 490	III, 90
522	Seed-Planter	I, 373	II, 702
523	Couplings for Wagons	II, 169	III, 463
524	Lard Lamp	I, 638	III, 239
525	Anvil	I, 423	III, 5
526	Machine for Cleaning Cotton	I, 515	III, 112
527	Window-Blinds	II, 130	III, 417
528	Adjustable Seats for Carriages	II, 153	III, 446
529	Machine for Cutting Veneers	II, 321	III, 681
530	Fastenings for Harness Hames	II, 351	III, 725
531	Smith's Forge	I, 442	III, 24
532	Tool for Tenoning Spokes	II, 312	III, 667
533	Shirt Bosom Studs	II, 503	III, 891
534	Machine for Cutting Tenons on Blind Slats	II, 318	III, 678
535	Self-Operating Device for Tilting Buckets	II, 200	III, 503
536	Hydrant	II, 179	III, 475
537	Forging Gun-Lock Springs	I, 442	III, 23
538	Shaker-Bars of Stove-Grates	I, 648	III, 240
539	Machine for Sowing Grain and Fertalizers	I, 414	II, 758
540	Seed Drill	I, 313	II, 604
541	Puddling Furnace	I, 443	III, 28
542	Machine for Sowing Seed Broadcast	I, 415	II, 757
543	Machine for Forming Felt Hat Bats	I, 524	III, 128
544	Gas Generating Apparatus	I, 591	III, 196
545	Machine for Dressing and Polishing Stone	II, 339	III, 695
546	Shingle Machine	II, 306	III, 658
547	Fan Blower	I, 315	II, 606
548	Box for Pise-Work Walls	II, 129	III, 416
16,549	Apparatus for Containing and Dispensing Syrups	II, 522	III, 912

No.	Invention or Discovery.	Text.	Plates.
16,550	Cotton Seed Planter	I, 369	II, 704
551	Corn Planter	I, 363	II, 686
552	Machine for Grinding File-Blanks	I, 439	III, 21
553	Lubricator	II, 215	III, 522
554	Sewing-Machine	I, 555	III, 164
555	Life Preserver	II, 48	III, 312
556	Ladies' Riding Saddles	II, 357	III, 716
557	Method of Joining Boxes, &c	II, 264	III, 589
558	Pump	II, 183	III, 482
559	Mode of Hanging Window-Sashes	II, 133	III, 419
560	Blast Furnace	I, 443	III, 28
561	Brick-Machine	II, 328	III, 695
562	Shingle-Machine	II, 307	III, 647
563	Stump Extractor	II, 126	III, 412
564	Brass Kettle Machine	I, 428	III, 10
565	Cotton Gin	I, 517	III, 126
566	Sewing-Machine	I, 555	III, 163
567	Washing-Machine	II, 399	III, 782
568	Accelerating Fire-Arm	II, 474	III, 869
569	Joiner's Plane	II, 272	III, 603
570	Operating Cut-off Valves of Steam Engines	II, 34	III, 297
571	Pistol	II, 485	III, 879
572	Bridge	II, 86	III, 360
573	Stuffing Leather	II, 355	.....
574	Melodeon	II, 414	III, 806
575	Fire-Arm	II, 470	III, 868
576	Machine for Making Envelopes	II, 411	III, 801-2
577	Attaching Thills to Sleighs	II, 164	III, 459
578	Extension Hoppers for Separators, Grain Mills, &c	I, 413	II, 748
579	Shoes for Truss-Frames	II, 127	III, 412
580	Gunpowder	I, 609	.....
581	Printing Stamp	II, 451	III, 845
582	Raking attachment for Reapers	I, 401	II, 735
583	Shirt Bosom Studs	II, 503	III, 891
584	Attaching the Eyes to the Blades of Hoes	I, 449	III, 25
585	Seed Planter	I, 373	II, 692
586	Guides for Sewing-Machines	I, 573	III, 168
587	Machine for Ramming Percussion-Caps	II, 466	III, 865
588	Surfacing Felt Hats	I, 528	III, 125
589	Feathering Paddle-Wheels	II, 50	III, 317
590	Seed Planter	I, 373	II, 691
591	Gas-making Process	I, 596	.....
592	Seed Planter	I, 374	II, 694
593	Controlling the Throttle Valve of Marine Engines	II, 33	III, 280
594	Smelting Zinc Iron Ore	I, 611	.....
595	Sash-Fastener	I, 488	III, 82
596	Safety-Indicators for Steam Boilers	II, 7	III, 259
597	Seed Planter	I, 374	II, 710
598	Fence adaptable to Uneven Ground	II, 102	III, 386
599	Reaping and Mowing Machine	I, 401	II, 736
600	Ornamenting Daguerrotype Cases, &c	II, 408	.....
601	Preparing India Rubber Cloth	I, 602	III, 203
602	Abdominal Supporter	II, 489	III, 881
603	Chain Pump	II, 190	III, 485
604	Gauges and Water Regulators for Steam Boilers	II, 6	III, 257
605	Rail for Street Railroads	II, 114	III, 400
606	Suspending and Adjusting Sticks in Sawing-Machines	II, 292	III, 633
607	Ventilating Stove	I, 656	III, 248
608	Hand Stamp	II, 453	III, 859
609	Sewing-Machine	I, 556	III, 165
16,610	Seed-Planter	I, 374	II, 695

No.	Invention or Discovery.	Text.	Plates.
16,611	Corn-Planter	I, 363	II, 685
612	Attaching the Arms of Horse Powers	II, 233	III, 546
613	Rotary Steam-Engine	II, 13	III, 389
614	Metallic Roofing	II, 121	III, 408
615	Instruments for Facing Mill-Stones	II, 240	III, 563
616	Self-Adjusting Wind-Wheel	II, 203	III, 508
617	Seed-Planter	I, 373	II, 709
618	Harvesting-Machine	I, 342	II, 654
619	Harvesting-Machine	I, 342	II, 648
620	Harvesting-Machine	I, 342	II, 649
621	Indicating Height of Water in Holds	II, 66	III, 334
622	Wool-Cleaning Machines	I, 578	III, 190
623	Locomotive Cow-Catcher for Railroads	II, 116	III, 403
624	Machine for Re-sawing Lumber	II, 298	III, 646
625	Springs for Vehicles	II, 167	III, 461
626	Fishing-Rod Reels	II, 518	III, 904
627	Machine for Cutting Dovetails and their Grooves	II, 259	III, 584
628	Calendar Clock	II, 70	III, 343
629	Patching Bullets	II, 466	III, 863
630	Seamless Tubes	I, 501	III, 101
631	Manufacturing Metallic Beads	I, 472	III, 63
632	Window-Blinds	II, 131	III, 419
633	Machine for Husking Corn	I, 353	II, 659
634	Self-Setting Hair-Triggered Gun-Lock	II, 482	III, 878
635	Extension Chair	II, 375	III, 757
636	Seed-Planter	I, 374	II, 690
637	Photographic Camera-Box	II, 424	III, 813
638	Machine for Making Hames	I, 445	III, 31
639	Gas Regulator	I, 597	III, 200
640	Bosom-Pin	II, 502	III, 889
641	Printing-Stamp	II, 452	III, 851
642	Carpenter's Bench Clamp	II, 252	III, 573
643	Device to allow Circular Saws to play laterally	II, 299	III, 643
644	Chimney-Cowl	I, 620	III, 213
645	Generating Air-Blast	II, 171	III, 467
646	Machine for Varnishing Percussion Caps	II, 467	III, 865
647	Folding Bedsteads	II, 367	III, 755
648	Gearing for Wagons	II, 169	III, 464
649	Brick-Press	II, 332	III, 707
650	Attaching Extra Topsails to Vessels	II, 61	III, 329
651	Gas-Retorts	I, 599	III, 197
652	Machinery for Excavating Rock	II, 98	III, 379
653	Fastening Skates	II, 522	III, 903
654	Self-Disengaging Car-Coupling	II, 140	III, 429
655	Device to allow Circular Saws end play	II, 300	III, 640
656	Boat Oar	II, 41	III, 306
657	Manufacturing Spinning Flyers	I, 576	III, 158
658	Machinery for Harvesting Grain and Grass	I, 341	II, 615
659	Machine for Splitting Shoe Pegs	II, 358	III, 721
660	Harness for Horses	II, 350	III, 728
661	Securing Hubs on Axles	II, 134	III, 422
662	Feed-Water Apparatus to Steam-Boilers	II, 6	III, 257
663	Machine for Fitting Gas-Pipe	I, 485	III, 85
664	Damper Regulators for Steam-Boilers	II, 6	III, 258
665	Electric Telegraph	II, 81	III, 356
666	Machine for Paring Apples	II, 363	III, 744
667	Machine for Cutting Vegetables	II, 396	III, 773
668	Operating Valves of Steam-Engine	II, 36	III, 300
669	Method of Raising Water	II, 197	III, 502
670	Boot-Crimping Machine	II, 343	III, 739
16,671	Sash-Fastener	I, 489	III, 77

No.	Invention or Discovery.	Text.	Plates.
16,672	Tile-Machine	II, 341	III, 693
673	Curtain Fixtures	II, 379	III, 757
674	Varnish-Can	II, 514	III, 900
675	Securing Panels of Field Fences	II, 104	III, 388
676	Keeper for Right and Left Hand Door-Locks	I, 466	III, 53
677	Hand Seed-Planter	I, 371	II, 698
678	Hinge	I, 448	III, 36
679	Grinding Inner Surface of Cast-Iron Kettles	I, 454	III, 42
680	Cauterizing-Syringe	II, 496	III, 885
681	File-cutting Machine	I, 440	III, 27
682	Combining Hydrogen and Wood Gas	I, 595	III, 198
683	Many-Chambered Rotating Breech Fire-Arm	II, 478	III, 878
684	Elastic Cap for Sealing Cans and Bottles	II, 371	III, 753
685	Gig-Mills for Napping Cloth	I, 511	III, 114
686	Supplying Upper Stories of Houses with Water	II, 197	III, 502
687	Marking-Slates	II, 339	.....
688	Casting Skeins for Wagons	I, 430	III, 5
689	Photographic Glass Holder	II, 425	III, 814
690	Manufacture of Iron and Steel	I, 453	III, 40
691	Calk for Horse Shoes	I, 451	III, 33
692	Iron Pavement	II, 112	III. 400
693	Steam-Boiler	II, 2	III, 252
694	Cordage-Machine	I, 513	III, 118
695	Saw-Filer	I, 489	III, 60
696	Floating Sectional Dry-Docks	III, 925	III, 371
697	Saw-Set	II, 283	III, 621
698	Grain-Separator and Straw-Carrier	I, 412	II, 759
699	Manufacturing Ribs for Cotton-Gins	I, 518	III, 116
700	Solar Camera	II, 408	III, 799
701	Hanging the Sieves of Grain Separators	I, 412	II, 758
702	Metallic Lathing	II, 110	III, 396
703	[Cancelled]	.....	.....
704	Shoving-Poles for Steamboats	II, 44	III, 311
705	Operating Mandrel-Cutters in Turning Tapering Sticks	II, 320	III, 681
706	Preparing Alkaline Silicates	I, 613	.....
707	Sustaining Friction-Rollers in Ships' Blocks	II, 56	III, 318
708	Casting Plates for Artificial Teeth	II, 497	III, 888
709	Compositions for Shuttle-Drivers	I, 587	III, 194
710	Sewing-Machine	I, 556	III, 166
711	Pen and Pencil Holder	II, 422	III, 814
712	Hand-Stamp	II, 454	III, 853
713	Sewing-Machine	I, 556	III, 165
714	Trip-Hammers	I, 446	III, 33
715	Washing-Machine	II, 400	III, 783
716	Lubricating Fire-Arms	II, 477	III, 873
717	Churn	I, 300	II, 582
718	Hand Printing-Press	II, 434	III, 823
719	Machine for Cutting Pasteboard for Boxes	II, 512	III, 897
720	Sheep-Shears	I, 413	II, 760
721	Harvester	I, 322	II, 655
722	Potato-Digger	I, 397	II, 735
723	Wind-Wheels in Self-Revolving Adjusting Frames	II, 205	III, 512
724	Making Tire for Railway Car-Wheels	II, 146	III, 431
725	Circular Sawing-Mill	II, 297	III, 646
726	Machine for Harvesting Standing Corn	I, 344	II, 619
727	Chronometer Escapement	II, 68	III, 337
728	Bridge-Trusses	II, 86	III, 361
729	Seed-Planter	I, 375	II, 697
730	Harvester	I, 322	II, 616
731	Hand-Stamp	II, 454	III, 856
16,732	Machine for making Axes	II, 530	III, 3

No.	Invention or Discovery.	Text.	Plates.
16,733	Screw-Wrench	I, 505	III, 108
734	Weavers' Shuttles	I, 575	III, 136
735	Raker for Reaping-Machines	I, 404	II, 741
736	Basin-Cock	II, 172	III, 468
737	Machine for Husking Corn	II, 528	II, 668
738	Photographic Plate-Holder	II, 486	III, 815
739	Mastic Roofing Compounds	II, 120	.....
740	Machine for Husking Corn	I, 354	II, 669
741	Curtain-Rollers	II, 381	III, 764
742	Shingle-Machine	II, 307	III, 653
743	Machine for Composing Types	II, 457	III, 854
744	Machinery for Grinding Card-Cylinders	I, 507	III, 110
745	Sewing-Machine	I, 552	III, 160
746	Machine for Bevelling and Jointing Staves	II, 315	III, 672
747	Generating Steam	II, 27	III, 281
748	Centrifugal Friction Clutch	II, 228	III, 539
749	Lock	I, 461	III, 46
750	Soap Mixture	I, 614	.....
751	Washing-Machine	II, 400	III, 786
752	Manufacture of Tin Pans	II, 394	III, 780
753	Projectile	II, 486	III, 878
754	Mould Candle Machine	I, 585	III, 194
755	Projectile for Rifled Cannon	II, 487	III, 877
756	Operating Valves of Hydraulic Engines	II, 182	III, 476
757	Cast-Iron Pavement	II, 112	III, 399
758	Machine for Husking Corn	I, 354	II. 656
759	Door-Spring	I, 438	III, 20
760	Melodeon	II, 414	III, 805
761	Portable Fire-Arm	II, 479	III, 869
762	Guide-Wheel for Railroad Cars	II, 156	III, 448
763	Harvester	I, 322	II, 623
764	Machine for Hulling and Scouring Wheat	I, 346	II, 665
765	Operating Valves for Steam Engines	II, 35	III, 298
766	Devices for Aging Liquors	I, 605	III, 207
767	Metallic Roof	II, 119	III, 406
768	Back Plates for Fireplaces and Grates	I, 624	III, 220
769	Reflectors for Locomotive and other Lamps	I, 639	III, 231
770	Mastic Roofing Materials	II, 121	.....
771	Fluxes for Treating Alloys	I, 582	.....
772	Seeding-Machine	I, 406	II, 758
773	Ships' Steering Apparatus	II, 58	III, 325
774	Ships' Capstans	II, 45	III, 309
775	Machine for Swaging Iron	I, 455	III, 41
776	Nautical Alarm	II, 39	III, 304
777	Machine for Reducing Boards to Uniform Thickness	II, 255	III, 576
778	Pointing and Threading Screws	I, 493	III, 94
779	Stop-Motions for Steam Engines	II, 14	III, 272
780	[Suspended]	.....	.....
781	Cut-Offs of Steam Engines	II, 11	III, 261
782	Machine for Grinding Saws	II, 304	III, 656
783	Manufacture of Felt Cloth	I, 511	.....
784	Casting Plates for Artificial Teeth of Alloys	II, 498	.....
785	Converting a Lifting into a Suction and Forcing Pump	II, 184	III, 482
786	Melodeon	II, 415	III, 809
787	Rock Drill	II, 95	III, 375
788	Harvester	I, 322	II, 654
789	Machine for Harvesting Grain	I, 341	II, 655
790	Machinery for Making Wire-Rope	I, 502	III, 102
791	Devices for Raising or Lowering Farm Gates	II, 107	III, 393
792	Escutcheon for Key Holes	II, 532	III, 39
16,793	Machine for Coiling Steel Springs	I, 497	III, 104

No.	Invention or Discovery.	Text.	Plates.
16,794	Machine for Shearing Steel Plates	I, 497	III, 100
795	Operating Saw-Mill Dogs	II, 281	III, 616
796	Lubricators for Steam Engine Cylinders	II, 216	III, 521
797	Discharging Cartridges from Breech-Loading Fire-Arms	II, 475	III, 870
798	Enamelling Cast Iron	I, 454	.....
799	Fire-Proof Stone	II, 340	.....
800	Forming the Curved Surface of Wooden Chair Seats	II, 258	III, 580
801	Hydraulic Jack	II, 182	III, 477
802	Arrangement of Carriage Springs	II, 149	III, 439
803	Machine for Cutting Screws	I, 492	III, 81
804	Roller for Bending Sheet Metal	I, 471	III, 56
805	Carpenters' Plane	II, 271	III, 602
806	Preventing Dust, &c., from Entering Railroad Cars	II, 157	III, 449
807	Steam Spade	I, 416	II, 763
808	Guard for Breast Pins	II, 407	III, 796
809	Valve Gear of Direct Action Steam Engines	II, 32	III, 291
810	Fluid Gates or Faucets	II, 176	III, 471
811	Chuck for Watchmakers' Lathe	II, 461	III, 843
812	Table-Gauge for Circular Sawing Machines	II, 294	III, 639
813	Supporting the Tongues of Coaches	II, 162	III, 454
814	Circular Sawing Machine	II, 286	III, 622
815	Grain Cradle	I, 318	II, 611
816	Operating Splitting-Knife in Hoop-Pole Machines	II, 261	III, 587
817	Stamping Figures on Carpenters' Squares	II, 314	III, 671
818	Self-Regulating Wind-Wheel	II, 204	III, 509
819	Bomb for Killing Whales	II, 462	III, 862
820	Device for Lubricating the Spigot of Gas Cocks	I, 633	III, 229
821	Second Anchor Shackle	II, 40	III, 304
822	Enema-Giving Apparatus	II, 491	III, 886
823	Machinery for Felting Hat Bodies	I, 524	III, 132
824	Power Loom	I, 540	III, 151
825	Lard Lamp	I, 638	III, 223
826	Rotary Printing Press	II, 444	III, 835
827	Veneering the Walls of Buildings	II, 129	III, 415
828	Telegraphic Repeater	II, 80	III, 353
829	Bill-Holder	II, 404	III, 796
830	Gas Generator	I, 591	III, 207
831	Hinge	I, 447	III, 33
832	Piano-Forte Action	II, 429	III, 816
833	Machinery for Cleaning and Separating Cotton, Wool, Fur, and other Fibrous Materials	I, 518	III, 122
834	Machine for Stuffing Horse Collars	II, 349	III, 731
835	Hernial Truss	II, 499	III, 888
836	Harvester	I, 323	II, 646
837	Printing Press	II, 444	III, 859
838	Cleaning Fibrous Materials	I, 522	.....
839	Brick-Machine	II, 328	III, 713
840	Harvester	I, 323	II, 676
841	Photographic Plate Vise	II, 427	III, 815
842	Rope Manufacture	I, 551	III, 158
843	Machine for Paring Apples	II, 364	III, 745
844	Screw Wrench	I, 505	III, 103
845	Compensating Local Attraction of Needle	II, 57	III, 324
846	Fire-Arm	II, 471	III, 866
847	Convertible Cider Mill	II, 235	III, 552-3
848	Construction of Gas-Burner	I, 633	III, 220
849	Machine for Planing Tapering Staves	II, 316	III, 676
850	Sewing-Machine	I, 557	III, 186
851	Cast Iron Car-Wheels for Railroads	II, 145	III, 431
852	Burner of Burning-Fluid Lamps	I, 637	III, 223
16,853	Cutting and Bending Sheet Metal	I, 470	III, 62

No.	Invention or Discovery.	Text.	Plates.
16,854	Reciprocating Circular Sawing-Machines	II, 293	III, 637
855	Mowing-Machines	I, 358	II, 673
856	Metallic Seals	II, 453	III, 847
857	Machine for Graduating Carpenters' Squares	II, 313	III, 669
858	Machine for Making Rope or Cordage	I, 552	III, 161
859	Comb	II, 501	III, 989
860	Piston for Muzzle-Loading Gun	II, 483	III, 977
861	Hand Printing Press	II, 442	III, 838
862	Baby Walker	II, 508	III, 995
863	Fireman's Mask and Respirator	II, 517	III, 914
864	Machinery for Combing Wool	I, 578	III, 184-5
865	Machine for Combing Fibrous Materials	I, 522	III, 129
866	Harrow	I, 319	II, 612
867	Cordage-Machine	I, 513	III, 119, 123
868	Casting Railway Car-Wheels	II, 531	III, 10
869	Rotary Pump	II, 191	III, 491-2
870	Manufacturing Cotton-Flannel	I, 515	III, 115
871	Lubricating under Pressure	II, 214	III, 522
872	Shirt Studs	II, 505	III, 893
873	Harvesting-Machine	I, 343	II, 647
874	Weather-Strips for Doors, Windows, &c	II, 98	III, 369
875	Rotary Pump	II, 190	III, 489
876	Operating Double Carriages in Saw-Mills	II, 283	III, 616
877	Clamps for Brooms	II, 369	III, 764
878	Breaking Stone into Regular Forms	II, 340	III, 694
879	Apparatus for making Nitric Acid	I, 581	III, 192
880	Pocket Lantern	I, 643	III, 235
881	Water-Wheel	II, 198	III, 500
882	Preparing Fertilizers	I, 611	.....
883	Portable Cross-Cut Sawing-Machine	II, 290	III, 629
884	Steam-Brakes for Railroad-Cars	II, 159	III, 451
885	Operating Ships' Windlass	II, 59	III, 326
886	Grappling or Dredging Machine	II, 93	III, 370
877	Mangle	II, 388	III, 776
888	Saw-Mill Dogs	II, 282	III, 618
889	Carpenters' Plane	II, 271	III, 600
890	Rigging Vessels	II, 63	III, 331
891	Attaching Hubs to Axles	II, 135	III, 422
892	Lock	I, 461	III, 44
893	Regulating Velocity of Wind-Wheels	II, 205	III, 510
894	Circular Sawing-Machine	II, 289	III, 627
895	Regulating Velocity of Wind-Wheels	II, 206	III, 507
896	[Suspended]	.....	.....
897	Smut-Machine	II, 249	III, 570
898	Railroads	II, 116	III, 403
899	[Suspended]	.....	.....
900	Feeding Drill-Shaft	I, 439	III, 22
901	Plough	I, 384	II, 725
902	Grade Delineators	II, 70	.....
903	Manufacturing Yarns from Mixed Cotton and Wool	I, 581	III, 183
904	Portable Boat	II, 41	III, 305
905	Steam-Drying Cylinder	I, 623	III, 216
906	Corn-Cultivator	I, 311	II, 605
907	Brick-Machine	II, 328	III, 712
908	Lock	I, 458	III, 45
909	Sleeve Button	II, 500	III, 890
910	Bullet Mould	II, 465	III, 862
911	Rotary Shingle-Machine	II, 310	III, 662
912	Gang Plough	I, 392	II, 725
913	Prairie Plough	I, 394	II, 728
16,914	Sewing-Machine	I, 557	III, 168

No.	Invention or Discovery	Text.	Plates.
16,915	Creasing Plates for Car-Springs	II, 144	III, 434
916	Disengaging Car-Springs from Mandrel	II, 144	III, 433
917	Machine for Manufacturing Shoe-Lasts	II, 358	III, 720
918	Composition for Floor-Cloths	I, 586	.....
919	Steam-Carriage	II, 149	III, 440
920	Hinge	I, 447	III, 33
921	Corn Harvester	I, 331	II, 645
922	Dry Gas Metres	I, 596	III, 200
923	Machine for Cutting Slots in Clothes-Pins	II, 377	III, 760
924	Machine for Husking Corn	I, 355	II, 666
925	Carriage Top	II, 150	III, 441
926	Bee-Hive	I, 295	II, 581
927	Machine for Making Pasteboard	I, 548	III, 156
928	Machinery for Pressing Water out of Pasteboard	I, 549	III, 154
929	Seed-Planter	I, 375	II, 694
930	Corn-Planter	I, 364	II, 680
931	Securing Bits in their Stocks	II, 254	III, 575
932	Centring and Holding Hubs while being Bored	II, 263	III, 587
933	Harrow	I, 319	II, 609
934	Preparing Yarn for Dyeing and Scouring	I, 580	III, 182
935	Steamboat Capstan	II, 47	III, 313
936	Lathe for Turning Irregular Forms	II, 261	III, 586
937	Steam Plough	I, 396	II, 729
938	Constructing Bit Stocks	II, 254	III, 575
939	Stoves for Railway Cars	I, 655	III, 248
940	Shaping Engines	II, 10	III, 255
941	Raking Apparatus for Harvesters	I, 337	II, 651
942	Baby Jumper	II, 508	III, 894
943	Feathering the Sails of Wind-Mills	II, 202	III, 511
944	Gunpowder Keg	II, 484	III, 876
945	Fluid Metre	II, 176	III, 472
946	Life-Preserving Bedsteads and Sofas	II, 367	III, 749
947	Type Composing and Distributing Machine	II, 456	III, 848–49
948	Machine for Washing Gold	I, 444	III, 29
949	Manufacture of Paper Pulp	I, 547	.....
950	Manufacture of Paint Brushes	II, 370	III, 753
951	Gas Regulator	I, 597	III, 200
952	Machine for Printing from Engraved Plates	II, 436	III, 825
953	Form for Making Wooden Slats, &c., into Baskets	II, 326	III, 671
954	Cutting the Throats of Carpenters' Planes	II, 273	III, 604
955	Table Knives	I, 457	III, 43
956	Enema Syringe	II, 496	III, 886
957	Harvester	I, 323	II, 632
958	Clinching Spikes	I, 496	III, 96
959	Steam Boiler	II, 2	III, 252
960	Window-Curtain Fixtures	II, 381	III, 762
961	Treating Moss for Mattresses	I, 612	.....
962	Apparatus for Exhibiting Stereoscopic Pictures	II, 455	III, 851
963	Road-Scraper	II, 118	III, 405
964	Shingle-Machine	II, 307	III, 657
965	Hoisting-Winches for Shipboard	III, 924	III, 318
966	Folding Window-Blinds	II, 131	III, 418
967	Machine for Making Rivets	I, 486	III, 87
968	Cutting Apparatus for Harvesters	I, 333	II, 622
969	Reefing Sails	II, 53	III, 320
970	Construction of Baskets	II, 509	III, 896
971	Reaping-Machine	I, 403	II, 741
972	Forming Spiral Springs for Chairs, Sofas, &c	II, 376	III, 762
973	Machine for Felting Hat-Bodies	I, 524	III, 136
974	Rotary Pump	II, 191	III, 492
16,975	Current and Paddle Wheel	II, 200	III, 503

No.	Invention or Discovery.	Text.	Plates.
16,976	[Number altered to 18,969.]	.....	.....
977	Machine for Cutting Fringes	I, 523	III, 130
978	Gate-Post for Field Fence	II, 107	III, 394
979	Photographic Trays	II, 427	III, 818
980	Smut-Machine	II, 249	III, 569
981	Lamp-Burner	I, 635	III, 227
982	Arrangement of Staging Brackets	II, 124	III, 409
983	Liquid Metre	II, 183	III, 481
984	Harvester	I, 324	II, 641
985	Harvester	I, 324	II, 636
986	Arrangement of Carriage Springs	II, 149	III, 439
987	Securing Legs of Corn and Cob Mills	II, 244	III, 564
988	Corn and Cob Mill	II, 235	III, 554
989	Window Curtain Fixtures	II, 381	III, 760
990	Sound-Boards of Piano fortes	II, 432	III, 824
991	Trimming Jack	I, 456	III, 43
992	Hawse-Holes for Vessels	II, 66	III, 329
993	Machine for Paring Apples	II, 364	III, 747
994	Paper-Ruling Machine	I, 547	III, 131
995	Strings for Musical Instruments	II, 418	III, 814
996	Field Fence	II, 102	III, 384
997	Wrench	I, 503	III, 104
998	Arranging and Operating Window-Shutters	II, 134	III, 420
999	Gold Separator	I, 444	III, 28
17,000	Veterinary Syringe	II, 496	III, 889
1	Machine for Manufacturing Cylindrical Boxes	II, 257	III, 582
2	Ships' Steering Apparatus	II, 58	III, 325
3	Road-Scraper	II, 118	III, 405
4	Railroad Car-Brakes	II, 138	III, 428
5	Machinery for making Rope	I, 550	III, 160
6	Fixtures for Curtain Rollers	II, 382	III, 764
7	Printer's Composing Stick	II, 435	III, 828
8	Invalid Chair	II, 374	III, 764
9	Working Pumps	II, 193	III, 495
10	Constructing Iron Fences	II, 104	III, 389
11	Construction of Retort	I, 612	III, 210
12	Mill for Cleaning Castings	I, 431	III, 13
13	Car Lock	I, 459	III, 52
14	Machine for Splitting Hoop-Poles	II, 262	III, 587
15	Hemp Brake	I, 529	III, 136
16	Propeller	III, 924	III, 318
17	Boring-Machine	II, 255	III, 576
18	Cooler for Wine, Beer, and other Liquids in Barrels	I, 623	III, 216
19	School Slate	II, 522	III, 909
20	Machinery for Crossing the Fibres of Wool	I, 519	III, 127
21	Preparation of Table Manna	I, 616	.....
22	Hot-Air Furnace	I, 629	III, 294
23	Level or Inclinometer	II, 75	III, 349
24	Lifting-Jack	II, 212	III, 517
25	Raking Attachment for Harvesters	I, 339	II, 653
26	Machine for Sawing Shingles	II, 298	III, 645
27	Lifting-Jack	II, 212	III, 518
28	Apparatus for Filtering Liquids	II, 175	III, 470
29	Manufacturing India Rubber Hose	I, 602	III, 204
30	Washing Machine	II, 400	III, 780
31	Reefing Ships' Sails	II, 58	III, 323
32	Revolving Fire-Arm	II. 480	III, 872
33	Forming the Brims of Felt Hats	I, 527	III, 129
34	Hoisting-Bucket for Coal, &c	II, 208	III, 514
35	Gas-Burner	I, 631	III, 219
17,036	Engraved Plate Printing Press	II, 441	III, 833-34

No.	Invention or Discovery.	Text.	Plates.
17,037	Treating Gutta Percha	I, 603	.....
38	Expansion Bit	II, 253	III, 574
39	Apparatus for Feeding Fuel to Furnaces	I, 628	III, 218
40	Coating Metals with Silver	I, 472	.....
41	Attaching Adjustable Buckets of Water-Wheels	II, 199	III, 500
42	Steam Boiler	II, 3	III, 254
43	Composition for Tanning Hides	II, 359	III, 723
44	Rammer for Rotating-Breech Fire-Arms	II, 477	III, 871
45	Raking Attachment for Harvesters	I, 339	II, 620
46	Preventing Incrustations in Steam Boilers	II, 7	.....
47	Wardrobe or Bureau Bedsteads	II, 368	III, 751
48	Molasses Cups	II, 379	III, 770
49	Sewing-Machine	I, 558	III, 169
50	Machine for Drying and Pressing Paper	I, 543	III, 159
51	Boot and Shoe Heels	II, 341	III, 738
52	Ice-breaking Boat	II, 42	III, 304
53	Self-Releasing Doors of Cotton Presses	II, 221	III, 534
54	Flute	II, 412	III, 804
55	Watch	II, 84	III, 348
56	Lime Kiln	II, 336	III, 694
57	Lock and Clasp for Porte-Monnaies	II, 433	III, 857
58	Railroad Car Brake	II, 137	III, 424
59	Curtain Fixtures	II, 380	III, 757
60	Shirt Studs	II, 506	III, 893
61	Machine for Splitting Wood	II, 325	III, 692
62	Machine for Threshing Grain	I, 421	II, 771
63	Attaching Hubs to Axles	II, 135	III, 421
64	Apparatus for Boring Artesian Wells	II, 85	III, 358
65	Winding Machinery for Mines	II, 111	III, 398
66	Baths for Photographic Purposes	II, 427	III, 816
67	Boot Tree	II, 344	III, 723
68	Closing Gas-Retorts	I, 601	III, 203
69	Traps for Relieving Steam Pipes of Water	II, 29	III, 286
70	Door-Spring	I, 437	III, 16
71	Ox Yokes	I, 422	II, 769
72	Knife for Cutting Veneers	II, 321	III, 686
73	Excluding Air from Liquors on Tap	II, 183	III, 479
74	Wasteway in Faucets	II, 174	III, 469
75	Clamping and Unclamping Panels of Field Fences	II, 104	III, 389
76	Cask-Heater	I, 634	III, 227
77	Chimney Damper	I, 620	III, 212
78	Awl-Haft	I, 424	III, 2
79	Gas Regulator	I, 598	III, 201
80	Hand Seed-Planter	I, 371	II, 691
81	Hand Seed-Planter	I, 371	II, 709
82	Bustle	II, 501	III, 890
83	Machine for Blocking Hat Bodies	I, 524	III, 130
84	Machine for Making Rope	I, 551	III, 158
85	Shackle-Block Messenger	III, 925	III, 322
86	Burners for Burning-Fluid Lamps	I, 636	III, 226
87	Tea Kettle	II, 394	III, 794
88	Automatic Rake for Harvesters	I, 343	II, 621
89	Hand Seed-Planter	I, 371	II, 691
90	Portable Apparatus for Illuminating-Gas	I, 595	III, 199
91	Cotton-Cultivator	I, 306	II, 595
92	Hemp-Brake	I, 529	III, 137
93	Hydrant	II, 179	III, 475
94	Carding-Machine	I, 509	III, 111
95	Means for Inhaling Medicinal Agents	II, 495	III, 882
96	Vault-Cover	II, 128	III, 414
17,097	Ventilating Vaults	II, 129	III, 415

No.	Invention or Discovery.	Text.	Plates.
17,098	Lime-Kiln	II, 336	III, 713
99	Saw-Set	II, 284	III, 615
100	Cooking-Stove	I, 651	III, 247
101	Reefing Sails	II, 54	III, 321
102	Bathing-Apparatus	II, 490	III, 889
103	Instrument for Curling Hair	II, 502	III, 890
104	Shingle-Machine	II, 307	III, 658
105	Smoothing-Iron	II, 387	III, 773
106	Combined-Square, Mitre-Square, and Bevel	II, 313	III, 669
107	Dental Forceps	II, 492	III, 883
108	Securing the Doors of Hay-Presses, &c.	II, 223	III, 528
109	Moulds for Castings	I, 430	III, 10
110	Grinding-Saws	II, 303	III, 656
111	Holding the Knives of Spoke-Shaves	II, 312	III, 667
112	Sawing-Machine	II, 287	III, 623
113	Washing-Machine	II, 400	III, 783
114	Dumping Railroad Cars	II, 157	III, 450
115	Machine for Felting Hat-Bodies	I, 525	III, 132
116	Grinding-Mill	II, 243	III, 563
117	Harness-Saddles	II, 351	III, 727
118	Lubricator	II, 215	III, 519
119	Current Water-Wheel	II, 199	III, 499
120	Machinery for Winding Conical Bobbins	I, 506	III, 109
121	Harrow	I, 320	II, 614
122	Surge or Cable Spring	II, 61	III, 329
123	Harvester	I, 324	II, 634
124	Oil-Can	II, 209	III, 514
125	Machine for forming Clay Pipe	II, 338	III, 698
126	Attaching Bolting-Cloths to Reels	II, 228	III, 536
127	Fluid Metre	II, 177	III, 473
128	Blacksmiths' Butterises	I, 425	III, 5
129	Potato-Digger	I, 397	II, 733
130	Stave-Machine	II, 314	III, 686
131	Brick-Machine	II, 329	III, 710
132	Argand Burner	I, 631	III, 219
133	Manufacturing Rawhide Whips	II, 361	III, 722
134	Harvesting-Machine	I, 343	II, 613
135	Apparatus for Binding Grain	I, 317	II, 614
136	Fire-Arm	II, 471	III, 868
137	Constructing Lockets, &c	II, 413	III, 802
138	Sidewalk-Pavement	II, 112	III, 398
139	Lock	I, 461	III, 47
140	Gilding and Ornamenting Metals	I, 498	.....
141	Mortising the Stiles for Blind-Slats	II, 270	III, 598
142	Arrangement of Posts in Steam-Cylinders	II, 27	III, 291
143	Fire-Arm	II, 471	III, 867
144	Seed-Drill	I, 313	II, 606
145	Seed-Planter	I, 375	II, 697
146	Engraving Designs on Watch-Cases, &c	II, 410	III, 800
147	Inkstand	II, 412	III, 799
148	Action for Grand Pianos	II, 432	III, 821
149	Machine for Cutting Indexes to Blank-Books	II, 405	III, 813
150	Chronometric Locks	I, 466	III, 56
151	Harvester-Frame	I, 320	II, 614
152	Preparation of Photographic Pictures, Engravings, &c.	II, 426	III, 814
153	Saw-Gummer	II, 280	III, 613
154	Atmospheric Pump	II, 190	III, 481
155	Brushes of Saw Cotton-Gins	I, 518	III, 126
156	Submerged Propelling-Wheels	II, 52	III, 320
157	Harvester	I, 324	II, 637
7,158	Street-Sprinkler	II, 523	III, 914

No.	Invention or Discovery.	Text.	Plates.
17,159	Churns	I, 300	II, 585
160	Revolving Last-Holder	II, 353	III, 726
161	Securing and Guiding the Boxes of Oil-Presses	II, 222	III, 529
162	Constructing Photographic Baths and Pans	II, 424	.....
163	Metallic Canisters for Putting up Paints	II, 514	III, 898
164	Cop-Tubes	I, 512	III, 115
165	Sails and Rigging of Vessels	II, 64	III, 332
166	Washing-Machine	II, 401	III, 780
167	Constructing Letters for Signs, &c	II, 413	III, 806
168	Wind-Mill	II, 201	III, 506
169	Machine for Splitting Wood	II, 324	III, 688
170	Setting Brace-Blocks of Saw-Mills	II, 283	III, 619
171	Machine for Planing Hoops	II, 275	III, 606
172	Tempering Steel Plates	I, 497	III, 107
173	Bomb Lance	II, 463	III, 861
174	Excavator	II, 99	III, 380
175	Machine for Tenoning Blind Slats	II, 318	III, 670
176	Self-Adjusting Sack-Holder	II, 520	III, 901
177	Machinery for Winding Wadding	I, 577	III, 189
178	Railroad Chair Machine	II, 115	III, 401
179	Skates	III, 926	III, 902
180	Washing-Machine	II, 401	III, 795
181	Purifying Oils	I, 607	.....
182	Anchor Tripper	II, 40	III, 304
183	Reversing the Chisels of Mortising Machines	II, 269	III, 601
184	Machine for Making Paper Bags	II, 418	III, 809
185	Gauges for Casks	II, 71	III, 343
186	Sewing-Machine	I, 553	III, 159
187	Screw-Cutting Machine	I, 491	III, 85
188	Stuffing-Box	II, 194	III, 496
189	Loom for Weaving Pile Fabrics	I, 538	III, 146–49
190	Machine for Cutting Veneers	II, 321	III, 682
191	Adjustable Pole for Carriages	II, 153	III, 443
192	Boat for Duck Shooting	II, 42	III, 306
193	Picker Motion for Looms	I, 540	III, 151
194	Printing Subscribers' Names on Newspapers	I, 452	III, 857
195	Surgical Splint Apparatus	II, 495	III, 884
196	Swells for Melodeons	II, 417	III, 812
197	Nut-Machine	I, 479	III, 62
198	Vault Cover	II, 127	III, 413
199	Vault Cover	II, 128	III, 413
200	Metal-Packed Pistons for Steam Engines	II, 12	III, 262
201	Portable Field Fence	II, 103	III, 387
202	Opening and Closing Gates by Vehicles	II, 108	III, 392
203	Rotary Brick-Machine	II, 333	III, 699
204	Door-Bolt	I, 435	III, 12
205	Reaping and Mowing-Machine	I, 401	II, 680
206	Omnibus Coffer	II, 163	III, 455
207	Straw Cutter	I, 418	II, 766
208	Heating Feed-water Apparatus of Locomotives	II, 23	III, 288
209	Ice-cutting Attachment to Vessels	II, 61	III, 328
210	Uniting Panels of Portable Field Fences	II, 105	III, 388
211	Plough	I, 385	II, 730
212	Construction of Ploughs	I, 391	II, 724
213	Locomotive Engine	II, 9	III, 264
214	Purifying Gutta Percha	I, 601	.....
215	Directing the Exhaust of Locomotives	II, 22	III, 268
216	Machine for Making India Rubber Belting	II, 226	III, 537
217	Chain Pump	II, 190	III, 484
218	Violin Attachment	II, 460	III, 841
17,219	Bed and Gauge to Regulate Tenoning	II, 317	III, 683

No.	Invention or Discovery.	Text.	Plates.
17,220	Brick-Machine	II, 329	III, 702-3
221	Cotton Seed-Planter	I, 370	II, 667
222	Transmitting Motion	II, 245	III, 567
223	Machine for Cutting and Binding Grain	I, 318	II, 612
224	Machine for Turning the Edges of Cloth	I, 512	III, 117
225	Pocket Safes or Fastenings	II, 503	III, 890
226	Self-Reversing Feed Motion for Sawing Mills	II, 297	III, 644
227	Machinery for Napping Cloth	I, 511	III, 115
228	Ships' Hawse-Holes	II, 57	III, 323
229	Wrench	I, 506	III, 106
230	Buckets of Grain-Weighing Machines	II, 225	III, 534
231	Varnish for Photographic Grounds	II, 425	.....
232	Sleighs and Cutters	II, 165	III, 460
233	Fire-Arm	II, 472	III, 867
234	Arrangement of Stairsteps	II, 124	III, 410
235	Close or Open Stove	I, 649	III, 243
236	Coupling for Shafting	II, 248	III, 567
237	Preparing Greensand Marl as a Fertilizer	I, 611	.....
238	Piano-forte Action	II, 429	III, 817
239	Constructing Cylinders for Printing Fabrics	II, 436	III, 857
240	Clothes Pounder	II, 377	III, 757
241	Ladies' Skirts	II, 504	III, 891
242	Arrangement of Door-Sill and Door-Strip	II, 91	III, 368
243	Blind Fastenings	I, 426	III, 4
244	Machine for Combing Wool	I, 579	III, 189
245	Lock	I, 462	III, 49
246	Operating the Gate of Turbine Wheels	II, 200	III, 504
247	Securing Hubs to Axles	II, 135	III, 421
248	Brick Machine	II, 330	III, 709
249	Cutters for Turning Wooden Boxes	II, 326	III, 691
250	Wrought Iron Plate Railroad Car-Wheels	II, 146	III, 432
251	Apparatus for Heating and Cooking by Gas	I, 633	III, 235
252	Self-Indicating Balance	II, 207	III, 513
253	Signal Lamps	II, 76	III, 355
254	Rotary Shingle-Cutter	II, 306	III, 652
255	Stitch for Sewing-Machines	I, 573	III, 178
256	Portable Barrack	II, 84	III, 358
257	Bumper Railroad Car-Brake	II, 139	III, 424
258	Corn-Planter	I, 364	II, 685
259	Apparatus for Roasting Meat	I, 646	III, 238
260	Seed-Planter	I, 376	II, 707
261	Overcoming the Windage in Fire-Arms	II, 481	III, 874
262	Machine for Making Lozenges	II, 494	III, 883
263	Machine for Cutting Match-Splints	II, 519	III, 910
264	Artificial Honey	II, 518	.....
265	Horse Shoes	I, 450	III, 36
266	[Suspended]	.....	.....
267	Hook-Temples for Looms	I, 539	III, 156
268	Connecting Cheek-Piece to Mouth-Piece of Bridle Bits	II, 348	III, 729
269	Corn-Husker	I, 351	II, 665
270	Constructing Portable Houses	II, 110	III, 398
271	Semi-Rotative Steam Engine	II, 14	III, 271
272	Needles for Sewing	I, 574	III, 178
273	Nail-Plate Feeder	I, 474	III, 74
274	Hemp Brake	I, 530	III, 135
275	Seed-Planter	I, 376	II, 711
276	Propeller Blades	II, 51	III, 318
277	Harvester	I, 325	II, 633
278	Press for Cotton	II, 222	III, 532
279	Treating Raw Cotton	I, 611	.....
17,280	Harvester	I, 325	II, 649

No.	Invention or Discovery.	Text.	Plates.
17,281	Folding Bedsteads	II, 367	III, 750
282	Bed Bottoms	II, 364	III, 745
283	Coal Stove	I, 649	III, 243
284	Blacksmith's Striker	I, 426	III, 5
285	Mortising Chisel	II, 267	III, 593
286	Joiners' Plane	II, 272	III, 605
287	Cartridge	II, 467	III, 865
288	Machine for Boring Flue-Sheets of Boilers	II, 5	III, 259
289	Clearing-Guard of Grain Elevators	II, 210	III, 515
290	Machine for Engraving Cylinders	II, 409	III, 803
291	Blasting Powder	I, 609	.....
292	Joiners' Bench Strip	II, 252	III, 573
293	Lock	I, 462	III, 48
294	Coal Cracker	I, 621	III, 215
295	Devulcanizing India Rubber	I, 602	.....
296	Piano-Forte Bridge	II, 430	III, 818
297	Trap for Animals	II, 525	III, 906
298	Fountain Pen	II, 424	III, 814
299	Binding Books	II, 405	III, 803
300	Machine for Planing Chair Seats	II, 274	III, 606
301	Heating Soldering Tools by Gas	I, 501	III, 94
302	Portable Field Fence	II, 103	III, 385
303	Soap Substitute for Scouring Woollens	I, 614	.....
304	Rock Drill	II, 96	III, 371
305	Seed-Planter	I, 376	II, 706
306	Submarine Excavator	II, 100	III, 382
307	Copying-Press	II, 434	III, 823
308	Preparing Canvas for Printing, Painting, &c	II, 439	.....
309	Gas Generator	I, 592	III, 194
310	Cordage-Machine	I, 513	III, 121
311	Portfolio	II, 433	III, 825
312	Projectile	II, 486	III, 879
313	Devices for Dressing Pieces of Lumber	II, 266	III, 596
314	Hand Truck	II, 165	III, 457
315	Devices for Dogging Lumber in Planing-Machines	II, 277	III, 609
316	Gathering and Depositing Dipped Matches	II, 520	III, 906
317	Gas Regulator	I, 598	III, 201
318	Treating Straw Braid for Hats	II, 528	II, 134
319	Printing in Colors	II, 437	III, 825
320	Piano-Forte Action	II, 430	III, 818
321	Gunpowder	II, 483	.....
322	Blanket for Calico-Printing Machine	II, 438	III, 829
323	Shuttle-Motion for Looms	I, 543	III, 150
324	Violin	II, 460	III, 849
325	Machine for Cleaning Grain	II, 229	III, 540
326	Machine for Re-dressing Millstones	II, 241	III, 560
327	Pump	II, 187	III, 480
328	Grain and Grass Harvester	I, 335	II, 626
329	Machine for Making Washboards	II, 322	III, 684-5
330	Removing Photographs from Glass to Paper	II, 428	.....
331	Fastening Sheet Metal on Roofs	II, 122	III, 405
332	Joiners' Plane	II, 273	III, 605
333	Friction Rollers for Journals of Shafts, Axles, &c	II, 234	III, 551
334	Machinery for Dressing Sewing Thread	I, 574	III, 183
335	Approach-Opening Gate	II, 106	III, 390
336	Apparatus for Reducing Zinc Ores	I, 484	III, 69
337	Running Gear of Carriages	II, 154	III, 444
338	Valves in Apparatus for Raising Water	II, 196	III, 501
339	Centrifugal Battery	II, 462	III, 861
340	Stencil-Plate Printing	II, 452	III, 840
17,341	Compressing the Ends of Blind Slats	II, 255	III, 575

No.	Invention or Discovery.	Text.	Plates.
17,342	Basin Faucet	II, 173	III, 469
343	Rotary Planing Cutter	II, 275	III, 606
344	Lifting-Jack	II, 212	III, 517
345	Shirt Stud or Button	II, 505	III, 893
346	Device for allowing Play to Arbors of Circular Saws	II, 299	III, 641
347	Shingle-Machine	II, 308	III, 659
348	Safety-Valves within Steam-Boilers	II, 38	III, 294
349	Indicating Speed of Vessels and Depth of Water	II, 65	III, 324
350	Mowing-Machine	II, 529	II, 746
351	Combined Lantern and Oil-Can	I, 642	III, 233
352	Machine for Folding Paper	I, 544	III, 154
353	Loom	I, 536	III, 143,4,5
354	Spring Hinge	I, 448	III, 34
355	Fire-Alarm Telegraph	II, 78	III, 348
356	Spinal Corset	II, 491	III, 881
357	Mowing and Reaping-Machine	I, 357	II, 679
358	Construction of Vehicles	II, 166	III, 461
359	Revolving Fire-Arm	II, 481	III, 874
360	Carriage Hub	II, 147	III, 438
361	Griddle	II, 386	III, 769
362	Hand Seed-Planter	I, 362	II, 687
363	Grain Scourers and Separators	II, 229	III, 541
364	Cutting and Bending Sheet Metal	I, 467	III, 57
365	Reefing Topsails	II, 55	III, 328
366	Sewing-Machine	I, 558	III, 168
367	Tongue and Castor Plate for Harvesters	I, 344	II, 619
368	Curtain Rollers	II, 381	III, 763
369	Wagon-Couplings	II, 167	III, 463
370	Bomb-Lance	II, 463	III, 862
371	Cooking-Stove	I, 652	III, 244
372	Sugar-Boiling Apparatus	II, 27	III, 281
373	Inkstand	II, 413	III, 799
374	Ore-Crushing Machine	I, 481	III, 66
375	Loom	I, 536	III, 141
376	Discharging Horse and Shafts from Carriage	II, 146	III, 437
377	Washing-Machine	II, 401	III, 792
378	Shingle-Machine	II, 308	III, 657
379	Reels for Yarn or Thread	I, 580	III, 191
380	Corn Planter	I, 365	II, 694
381	Sizing Compositions for Yarns, Paper, &c	I, 587	.....
382	Fire-Arm	II, 472	III, 869
383	Machine for Testing Strength of Materials	II, 182	III, 478
384	Wind-Wheel	II, 203	III, 512
385	Ore-Washer	I, 483	III, 67
386	Repeating Fire-Arm	II, 470	III, 866
387	Making Paper-Pulp	I, 547	III, 159
388	Registering Apparatus for Printing-Presses	II, 451	III, 839
389	Manufacture of Iron and Steel	I, 453	.....
390	Brick-Machine	II, 330	III, 712
391	Cotton-Cultivator	I, 311	II, 604
392	Fertilizing Compounds	I, 588	.....
393	Machine for Making Stove-Pipe	I, 486	III, 86
394	Machinery for Compressing Gaseous Bodies	II, 178	III, 471
395	Bit for Cutting out Cylindrical Plugs of Wood	II, 253	III, 575
396	Apparatus for Examining Vessels' Keels	II, 61	III, 329
397	Corn-Planter	I, 364	II, 684
398	Machine for Cutting Grooves and Slots	I, 445	III, 29
399	Tanning-Apparatus	II, 358	III, 715
400	Sewing-Machine	I, 558	III, 169
401	Thermo-pneumatic Safety-Valve	II, 194	III, 496
17,402	Seed-Planter	I, 376	II, 696

No.	Invention or Discovery.	Text.	Plates.
17,403	Compound Gauge	II, 261	III, 586
404	Loom	I, 537	III, 148
405	Printing-Press	II, 444	III, 832
406	Burglars' Alarms	II, 512	III, 913
407	Projectile for Killing Whales	II, 485	III, 875
408	Cutting Boot and Shoe Soles of India-Rubber, &c	II, 342	III, 739
409	Tips for Sugar-Moulds	I, 616	III, 207
410	Securing Nuts on Axles	II, 135	III, 422
411	Drop-Press	II, 221	III, 535
412	Door-Lock	I, 459	III, 52
413	Sleeve-Fastener	II, 504	III, 892
414	Skates	II, 521	III, 902
415	Hydrant	II, 180	III, 481
416	Fastenings for Garments	II, 502	III, 890
417	Mowing-Machine	I, 359	II, 679
418	Printing-Press	II, 445	III, 837
419	Door-Hinge	I, 447	III, 34
420	Preparing the Fibre of Banana, &c	I, 521	III, 118
421	Method of Hanging Millstones	II, 241	III, 558
422	Packing Pistons of Steam-Engines	II, 13	III, 261
423	Steam Pumping-Apparatus	II, 185	III, 484
424	Lock	I, 458	III, 45
425	Scroll-Sawing Machine	II, 292	III, 631
426	Water-Wheel	II, 198	III, 501
427	Sewing-Machine	I, 559	III, 170
428	Potato-Digger	I, 397	II, 731
429	Machine for Sowing Seed Broadcast	I, 415	II, 751
430	Plough	I, 385	II, 731
431	Block for Blacking Boots and Shoes	II, 511	III, 897
432	Gauge-Attachment for Hand-Saws	II, 304	III, 650
433	Faucet	II, 173	III, 468
434	Life-Preserver	II, 49	III, 315
435	Feeding Gas Generators	I, 594	III, 198
436	Locomotive Boilers	II, 1	III, 251
437	Manufacturing Screws of Thin Metal	I, 493	III, 97
438	Machine for Harvesting Hemp	I, 341	II, 647
439	Atmospheric Churns	I, 302	II, 589
440	Machine for Sowing Seed Broadcast	I, 415	II, 758
441	Implement for Paring Horses' Hoofs	I, 453	III, 40
442	Cast-Iron Car-Wheels	II, 145	III, 432
443	Fluid-Metre	II, 177	III, 474
444	Churns	I, 300	II, 589
445	Manufacturing Leather Shoe-Binding	II, 355	III, 718
446	Feeding Grain to Millstones	II, 240	III, 553
447	Hydraulic Blast-Generator	II, 181	III, 480
448	Apparatus for Condensing Vapors and Gases	I, 617	III, 207
449	Oscillating Printing-Press	II, 449	III, 847
450	Seed-Planter	I, 377	II, 698
451	Harvester	I, 325	II, 622
452	Machine for making Shovels	I, 495	III, 79
453	Die-Stock	I, 434	III, 18
454	Portable Cross-cut Sawing Machine	II, 291	III, 629
455	Cutter for Heels of Boots and Shoes	II, 344	III, 717
456	Cooking Range	I, 645	III, 238
457	Printers' Composing Stick	II, 435	III, 824
458	Machine for Filing Saws for Cotton Gins	II, 531	III, 25
459	Uniting the Panels of Portable Fences	II, 105	III, 385
460	Folding Bedsteads	II, 367	III, 773
461	Hat-Stand	II, 386	III, 767
462	Plough Clevis	I, 383	II, 717
17,463	Printing-Press	II, 445	III, 839

No.	Invention or Discovery.	Text.	Plates.
17,464	Door-Bolt	I, 435	III, 17
465	Wood-Gas Generators	I, 595	III, 199
466	Severing the Butts and Husks from Corn	I, 303	II, 581
467	Machine for Dressing Water Furrows	I, 317	II, 608
468	Pickers for Looms	I, 540	III, 139
469	Hominy Machine	II, 518	III, 913
470	Detachable Handle for Smoothing-Irons	II, 387	III, 771
471	Splitting Leather and Hides	II, 354	III, 724
472	Water-Gauges for Steam-Boilers	II, 7	III, 258
473	Preventing Counterfeiting of Bank Notes, &c.	II, 404	.....
474	Door-Bolt	I, 435	III, 10
475	Dies for Punching Fork Tines	I, 435	III, 17
476	Plough	I, 385	II, 712
477	Blotter	II, 405	III, 797
478	Machine for Repairing Railroad Cars	II, 114	III, 401
479	Devices for holding Bit in Brace	II, 254	III, 576
480	Machine for Rounding and Backing Books	II, 406	III, 798
481	Covering Insulated Wire with Lead, &c.	II, 72	III, 343
482	Machine for Grooving Stove-Pipe	I, 485	III, 75
483	Steam-Heating Stove	I, 648	III, 241
484	Machine for Paring and Quartering Apples	II, 361	III, 742
485	Metallic Band Fastening for Bales, &c.	II, 207	III, 514
486	Self-Loading Cart	II, 161	III, 453
487	Machinery for Manufacturing Felt Cloth	I, 520	III, 128
488	Carpet Fastening	II, 372	III, 748
489	Machine for Drying Pasteboard or Paper	I, 549	III, 152
490	Catch for Doors	I, 438	III, 20
491	Machine for Making Horse-Shoe Nails	I, 450	III, 36
492	Railroad-Switch Lock	II, 116	III, 403
493	Self-Acting Wagon-Brake	II, 167	III, 462
494	Mitre-Box	II, 267	III, 592
495	Bakers' Ovens	I, 644	III, 235
496	Rope-Machine	I, 550	III, 158
497	Roofing-Machine	II, 120	III, 408
498	Grain-Separator	II, 230	III, 542
499	Card Printing Press	II, 441	III, 829
500	Preparing Hub-Blocks for the Lathe	II, 262	III, 589
501	Melodeon	II, 415	III, 806
502	Machine for Making Wrought Nails	I, 476	III, 70
503	Guiding and Cushioning Puppet-Valves	II, 194	III, 495
504	Frame for Camp Tents	II, 513	III, 898
505	Clay-Pulverizers	II, 334	III, 706
506	Carriage-Brakes	II, 146	III, 436
507	Solar Lamp	I, 640	III, 230
508	Sewing-Machine	I, 560	III, 164
509	Wheelwrights' Machine	II, 170	III, 465
510	Coal Stove	I, 649	III, 244
511	Basin Faucet	II, 173	III, 468
512	Machine for Felling Trees by Hand	II, 126	III, 413
513	Hanging Doors	II, 91	III, 368
514	Portable Fence	II, 103	III, 384
515	Constructing Watch and Locket Rims	II, 460	III, 844
516	Rotary Pump	II, 184	III, 484
517	Automatic Fan	II, 384	III, 768
518	Shield and Guide for Circular Saws	II, 301	III, 630
519	Making Lampblack	I, 604	III, 208
520	Carriage Wheel	II, 152	III, 443
521	Adjusting Circular Saws obliquely	II, 300	III, 633
522	Hob for Cutting Screw-Chasers	I, 490	III, 88
523	Nail Machine	I, 473	III, 67
17,524	Manufacture of Boots	II, 348	III, 740

No.	Invention or Discovery.	Text.	Plates.
17,525	Steering Apparatus for Ships	II, 59	III, 325
526	Paper File	II, 419	III, 812
527	Mop Head	II, 389	III, 771
528	Stump Extractor	II, 126	III, 412
529	Road-Scraper	II, 118	III, 404
530	Gas-Burner	I, 631	III, 220
531	Wrench	I, 503	III, 108
532	Machine for Setting Tires on Wheels	II, 170	III, 463
533	Damper Regulators for Steam Boilers	II, 6	III, 258
534	Nut-Machine	I, 476	III, 71
535	Machine for Folding Paper	II, 420	.....
536	Cheese Hoop	II, 211	III, 516
537	Automatic Saw-Mill Blocks	II, 281	III, 614
538	Incasing Hydrants	II, 181	III, 476
539	Valves for Basin, &c., Cocks	II, 172	III, 467
540	Fire-Grates or Linings of Fire-Pots	I, 634	III, 224
541	Tonguing and Grooving Hand-plane	II, 271	III, 599
542	Machine for Forging Horse-Shoe Nails	I, 449	III, 35
543	Power Printing-Press	II, 450	III, 846
544	Machine for Pegging Boots and Shoes	II, 345	III, 735
545	Carpet Bags	II, 349	III, 729
546	Brick Press	II, 333	III, 704
547	Mould-board for Reversible Ploughs	I, 395	II, 718
548	Basin Evaporators	I, 590	III, 196
549	Card Printing-Press	II, 447	III, 852
550	Laths for Building	II, 110	III, 397
551	Safety-Attachment for Hatchways	II, 109	III, 397
552	Hydrant	II, 180	III, 474
553	Stock for Bench Planes	II, 270	III, 601
554	Rigid Hoop-Knife for Splitting Leather	II, 355	III, 724
555	Harvester	I, 325	II, 616
556	Machine for making Axe-Poles	I, 424	III, 2
557	Cork Machine	II, 516	III, 900
558	Invalid-Bed Elevators	II, 365	III, 746
559	Roller Temple for Looms	I, 542	III, 132
560	Steam Pressure Gauges	II, 16	III, 276
561	Making Cast Iron Malleable	I, 454	.....
562	Depilating Compound for Hides	I, 588	.....
563	Screw Cutter	I, 491	III, 85
564	Butter Worker	I, 297	II, 582
565	Motion for Preserving Rolling Contact	II, 245	III, 564
566	Corn-Planter	I, 366	II, 706
567	Chairs for Invalids	II, 375	III, 758
568	Seed-Planter	I, 377	II, 712
569	Bedstead	II, 366	III, 749
570	Animal Traps	II, 525	III, 913
571	Sewing-Machine	I, 560	III, 170
572	Rudder	II, 53	III, 319
573	Safety-Pocket	III, 925	III, 891
574	Construction of Gas-Generators	I, 594	III, 196
575	Cutting Apparatus for Harvesters	I, 334	II, 644
576	Scouring and Setting Leather	II, 354	III, 718
577	Plough	I, 385	II, 721
578	Foot Stove	I, 654	III, 249
579	Plough	I, 386	II, 714
580	Railroad Snow-Excavators	II, 115	III, 402
581	Machine for Sowing Grain in Drills	I, 414	II, 760
582	Corn-Planter	I, 365	II, 687
583	Valve Connexions for Steam-Engines	II, 31	III, 279
584	Corn-Planter	I, 365	II, 692
17,585	Valve-Gear of Steam-Engines	II, 32	III, 278

No.	Invention or Discovery.	Text.	Plates.
17,586	Condensing Apparatus for Salt and Gases	I, 588	III, 195
587	Postage-Stamp and Label Sticker	II, 454	III, 89
588	Refrigerator	II, 390	III, 773
589	Bending Sheet-Metal Pans	I, 468	III, 58
590	Wiring Tin Pans	I, 498	III, 105
591	Gang-Plough	I, 392	II, 723
592	Propeller Canal-Boat	II, 44	III, 313
593	Elevating Water by Compressed Air	II, 196	III, 498
594	Cultivator-Plough	II, 530	II, 726
595	Excavating-Machine	II, 98	III, 379
596	Smut-Machine	II, 248	III, 571
597	Mowing-Machine	I, 359	II, 674
598	Propelling Vessels in Shoal Water	II, 62	III, 328
599	Gas-Generator	I, 592	III, 197
600	Umbrellas and Parasols	II, 506	III, 892
601	Portable Steam-Sawing Apparatus	II, 290	III, 630
602	Ladies' Skirts	II, 504	III, 890
603	Machine for Skiving Boot-Counters	II, 343	III, 738
604	Faucet	II, 173	III, 468
605	Spring Bed-Bottoms	II, 365	III, 746
606	Machine for Graduating Lineal Measures	II, 73	III, 345
607	Steam-Pressure Gauge	II, 17	III, 273
608	Gas-Stove	I, 655	III, 249
609	Screw-Wrench	I, 505	III, 102
610	Preparing Liquid Rose-Pink	I, 609	.....
611	Keeper for Locks and Latches	I, 466	III, 52
612	Knitted Fabrics	I, 519	III, 123
613	Ventilating Vault and Platform Light	II, 128	III, 414
614	Gas-Generator	I, 592	III, 197
615	Printing-Press	II, 445	III, 837
616	Reducing Topsails	II, 54	III, 322
617	Machine for Polishing Raw-hide Whips	II, 360	III, 718
618	Adjusting Plane-Irons in their Stocks	II, 272	III, 603
619	Grinding-Mill	II, 236	III, 554
620	Saw-Set	II, 284	III, 617
621	Fastening Handles to Baskets	II, 509	III, 894
622	Vapor Burner	I, 6	III, 211
623	Vane Governor for Steam Engines, &c	II, 16	III, 265
624	Valvular Arrangement for Faucets, &c	II. 194	III, 498
625	Pump	II. 187	III, 483
626	Picker Sawing-Machine	II, 295	III, 642
627	Constructing Stores	II, 125	III, 411
628	Manufacture of Iron	I, 455	III, 37
629	Sawing Mill	II, 295	III, 643
630	Limiting the Depth of Hole in Boring-Machines	II, 256	III, 577
631	Machine for Finishing Brush Handles	II, 369	III, 755
632	Hydrant	II, 180	III, 478
633	Ships' Windlasses	II, 60	III, 327
634	Machine for Straightening Knife-Blades	I, 457	III, 43
635	Enamelling Iron Pipes and Hollow-Ware	I, 590	.....
636	Apparatus for Regulating Boiler Furnaces	II, 1	III, 250
637	Lantern for Lighting Street Gas	I, 641	III, 230
638	Central Draught Joint of Carriages	II, 154	III, 445
639	Hardening Axes	I, 424	III, 3
640	Candlestick	I, 619	III, 211
641	Boring-Mills	I, 428	III, 7
642	Breech-Loading Fire-Arm	II, 469	III, 866
643	Cylindrical Throttle-Valve for Steam Engines	II, 34	III, 297
644	Breech-Loading Fire-Arm	II, 469	III, 874
645	Adjusting Plane-Irons in their Stocks	II, 272	III, 604
17,646	Machine for Cleaning Rice	II, 246	III, 565

No.	Invention or Discovery.	Text.	Plates.
17,647	Caligraph	II, 407	III, 806
648	Steam Boiler	II, 3	III, 255
649	Preparing Elastic India-Rubber Cloth	I, 601	.....
650	Machine for Excavating Tunnels	II, 98	III, 380–1
651	Back-Ground for Photographs on Glass	II, 428	.....
652	[Suspended]	.....	.....
653	Attaching Air-Chambers to Pumps	II, 189	III, 485
654	Water-Metre	II, 195	III, 497
655	Taps and Dies for Cutting Screws	I, 493	III, 78
656	Steam Whistles	II, 30	III, 295
657	Bench Plane	II, 270	III, 601
658	Fountain Lamps	I, 638	III, 223
659	Smelting Furnace	I, 443	III, 27
660	Machine for Making Bolts and Rivets	I, 426	III, 7
661	Machine for Riveting Boilers	II, 2	III, 250
662	Iron Pavement for Streets	II, 113	III, 400
663	Machine for Making Paper	I, 544	III, 153
664	Blast-Blower	II, 172	III, 467
665	Machine for Making Horse-Shoes	I, 452	III, 38, 39
666	Portable Steam Radiator for Heating Apartments	I, 644	III, 236
667	Distributing Apparatus of Flouring Mills	II, 242	III, 549
668	Whiffletree Hook	II, 171	III, 464
669	Earth Excavator	II, 99	III, 384
670	Uterine Supporter	II, 499	III, 384
671	Gas Regulator	I, 599	III, 202
672	Horse-Shoe	II, 532	III, 32
673	Electric Telegraph	II, 82	III, 353
674	Gas-Burner	I, 631	III, 221
675	Separating the Oily Particles suspensed in Steam	II, 28	III, 274
676	Harvester	I, 325	II, 673
677	Adjustable Fender-Posts for Saw-Mills	II, 282	III, 618
678	Harvesting-Machine	I, 343	II, 618
679	Sewing-Machine	I, 562	III, 171
680	Carriage Top	II, 150	III, 441
681	Permutation Lock	I, 460	III, 56
682	[Suspended]	.....	.....
683	Metallic Packing for Steam Pistons	II, 28	III, 269
684	Iron Truss Frames for Bridges	II, 87	III, 362
685	Self-Acting Rakes for Harvesters	I, 340	II, 624
686	Sawing-Machine for Felling Trees	II, 290	III, 630
687	Automatic Rake for Harvesters	I, 330	II, 644
688	Printing Ink	II, 437	.....
689	Valve-Gear for Steam Engines	II, 32	III, 279
690	Raking Attachment for Harvesters	I, 339	II, 650
691	Harvester	I, 326	II, 623
692	Fence	II, 101	III, 384
693	Frame for combined Mowers and Reapers	I, 357	II, 739
694	Chilling Plough-Shares	I, 432	III, 10
695	Elastic Loop for Suspending Bedstead Slats	II, 366	III, 747
696	Street Lanterns	I, 613	III, 234
697	Preserving Green Corn	II, 379	III, 757
698	Fire-Arm	II, 473	III, 870
699	Opening and Closing Farm Gates	II, 108	III, 394
700	Brake for Wagons	II, 168	III, 462
701	Mortising-Machine	II, 268	III, 595
702	Cartridge	II, 468	III, 865
703	Raking Apparatus for Harvesters	I, 338	II, 629
704	Gas Generator	I, 593	III, 197
705	Harvester	I, 326	II, 649
706	Manufacture of Journal Boxes for Shafting, &c	II, 234	III, 544
17,707	Die Stock	I, 434	III, 17

No.	Invention or Discovery.	Text.	Plates.
17,708	Coloring Yarn in the Bobbin	I, 586	III, 193
709	Resinous Compounds for Covering Hams	I, 588	.....
710	Starch from Maize	I, 614	.....
711	Condensing Liquids in Gas-Main Pipes	I, 589	III, 194
712	Slide Valves for Steam Engines	II, 38	III, 295
713	Defecating Cane Juice	I, 584	.....
714	Lock	I, 463	III, 55
715	Ships' Capstans	II, 45	III, 308
716	Strap Pillow-Block for Shafting, &c	II, 248	III, 566
717	Sewing-Machine	I, 561	III, 171
718	Arrangement of Valves in Steam Cylinders	II, 34	III, 298
719	Cross-Cut Sawing Apparatus	II, 285	III, 618
720	Machine for Husking Corn	I, 355	II, 662
721	Metal Separator	I, 469	III, 59
722	Truss Bridge	II, 87	III, 362
723	Machine for Cutting Pasteboard	I, 549	III, 150
724	Steering Apparatus	II, 60	III, 327
725	Instrument for Cutting Button-Holes	II, 500	III, 890
726	Air Chamber to Produce Uniform Flow of Water	II, 200	III, 503
727	Alcohol Blow-Pipe	I, 617	III, 212
728	Grain Separator	II, 231	III, 543
729	Corn Harvester	I, 332	II, 628
730	Box Window-Frame	II, 132	III, 420
731	Machine for Husking Corn	II, 529	II, 673
732	Dry Sand Cores	I, 433	.....
733	Self-Priming Gun-Lock	II, 482	III, 873
734	Machine for Tapping Nuts	I, 480	III, 68
735	Securing Stock to Guide-Rods of Joiners' Ploughs	II, 263	III, 589
736	Machine for Straightening Veneers	II, 322	III, 682
737	Wrench	I, 503	III, 106
738	Upsetting Tire	I, 499	III, 104
739	Cutting Apparatus for Harvesters	I, 334	II, 611
740	Lock	I, 463	III, 50
741	Backing Electrotype Plates	II, 409	III, 798
742	Connecting the Panels of Field Fences	II, 104	III, 387
743	Belt-Shifter for Machinery	II, 226	III, 538
744	Sewing-Machine	I, 562	III, 164
745	Cutting Apparatus for Harvesters	I, 333	II, 640
746	Paper Cop-Tubes	I, 543	III, 132
747	Sash-Lock	I, 460	III, 44
748	Cooking-Stove	I, 652	III, 241
749	Scroll-Wheel for Harvesters	I, 340	II, 613
750	Air-heating Stove	I, 646	III, 240
751	Shaft Coupling	II, 164	III, 458
752	Whiffletrees	II, 171	III, 464
753	Embossing and Printing Press	II, 434	III, 828
754	Covering for Drawing-Rolls	I, 549	.....
755	Melodeon Attachment	II, 414	III, 806
756	Railroad-Car Stove	I, 648	III, 241
757	Lifting-Jack	II, 212	III, 518
758	Gold-Washer and Amalgamator	I, 444	III, 25
759	Brick-Machine	II, 331	III, 703
760	File-cutting Machine	I, 440	III, 23
761	Metallic Pen	II, 424	III, 815
762	Operating Radial Cutters in Lathes	II, 265	III, 593
763	Applying Railroad Car-Brakes	II, 139	III, 426
764	Machine for Trimming Hedges	I, 345	II, 672
765	Rock-Drilling Machine	II, 95	III, 373
766	Rock-Drilling Machine	II, 94	III, 371
767	Gas Stove	I, 647	III, 240
17,768	Pump	II, 187	III, 488

No.	Invention or Discovery.	Text.	Plates.
17,769	Bit-Brace	II, 252	III, 574
770	Bit or Drill Holder	II, 254	III, 574
771	Gas Stove	I, 656	III, 245
772	Hay Rake	I, 400	II, 744
773	Machine for making Railroad Chairs	II, 162	III, 454
774	Machine for Gauging and Filing Saws	II, 303	III, 653
775	Fastening Artificial Teeth to the Metallic Plate	II, 498	III, 888
776	Pen and Pencil Case	II, 421	III, 813
777	Cultivator Plough	I, 391	II, 723
778	Nail-Plate Holder	I, 474	III, 59
779	Harvester	I, 326	II, 631
780	Rigging of Ships	II, 58	III, 321
781	Churns	I, 301	II, 580
782	Automatic Lathe	II, 264	III, 595
783	Device for Sealing Bottles, Cans, &c	II, 372	III, 748
784	Washing-Machine	II, 401	III, 783
785	Mattress	II, 388	III, 776
786	Corn-Planter	I, 366	II, 684
787	Rope-Machine	I, 550	III, 157
788	Setting out the Packing of Pistons for Steam-Engines	II, 13	III, 272
789	Piano-forte	II, 430	III, 819
790	Churns	I, 301	II, 587
791	Use of Coal-Tar in Iron Furnaces	I, 630	III, 225
792	Shot-Cartridge	II, 467	III, 867
793	Applying Fly-Wheel to Hand-Cars	II, 156	III, 447
794	Railroad Car Seats	II, 142	III, 435
795	Hemp-Drawing Machine	I, 532	III, 141
796	Seal for Car Doors	II, 141	III, 430
797	Cultivator	I, 307	II, 593
798	Raking Apparatus for Harvesters	I, 338	II, 652
799	Feeding-Cutter in Mortise-Boring Machines	II, 256	III, 579
800	Spiral Catch for Breast-Pins	II, 407	III, 802
801	Seal for Railroad Freight-Cars, &c	II, 160	III, 452
802	Seal for Railroad Freight-Cars, &c	II, 160	III, 452
803	Self-Setting Trap-Hook	II, 524	III, 912
804	Lock	I, 464	III, 49
805	Constructing Carriages	II, 154	III, 445
806	Cotton-Gin	I, 517	III, 119
807	Lime-Kiln	II, 336	III, 700
808	Locking Cylindrical Door-Bolts	I, 436	III, 6
809	Draining-Machine	II, 93	III, 369
810	Oil-Can	II, 209	III, 514
811	Fly-Trap	II, 524	III, 914
812	Wrest-Pins for Pianos	II, 432	III, 822
813	Machine for Cutting Metal	I, 467	III, 54
814	Centring-Machine	I, 431	III, 13
815	Lock	I, 464	III, 51
816	Adjusting Round Tenon Cutter	II, 317	III, 678
817	Governors of Steam-Engines	II, 16	III, 274
818	Bureau-Bedsteads	II, 367	III, 749
819	Machine for Cleaning Cotton	I, 515	III, 124
820	Pump	II, 188	III, 493
821	Cultivator	I, 307	II, 596
822	Lubricator	II, 215	III, 520
823	Cutting Tenons by two Oblique Circular Saws.	II, 305	III, 647
824	Inking-Rollers for Printing-Presses	II, 449	III, 855
825	Feed-Motion for Sewing-Machines	I, 572	III, 187
826	Camels for Raising Sunken Vessels	II, 63	III, 332
827	Machine for Planting Potatoes	I 399	II, 734
828	Machine for Manufacturing Felt Cloth	I, 519	III, 120
17,829	Sawing-Mill	II, 296	III, 645

No.	Invention or Discovery.	Text.	Plates.
17,891	Bit-Brace for Boring Obliquely	II, 253	III, 574
892	Raising Sunken Vessels	II, 65	III, 324
893	Steam-Engine Valves and Passages	II, 39	III, 303
894	Guard-Fingers for Harvesters	I, 336	II, 612
895	Treating Paper-Stuff	I, 548	----------
896	Machine for Drilling Rock	II, 95	III, 374
897	Fastenings for Carpets	II, 373	III, 773
898	Corn Planter	I, 367	II, 693
899	Receiving-Box for Passengers' Fares	II, 136	III, 423
900	Hemp Brake	I, 530	III, 138
901	Machine for Paring and Slicing Apples	II, 362	III, 743
902	Machine for Stuffing Horse Collars	II, 349	III, 734
903	Oscillating Steam Engine	II, 13	III, 260
904	Revolving Fire-Arm	II, 474	III, 869
905	Edge-Plane for Trimming Boot and Shoe Soles	II, 342	III, 715
906	Shingle-Machine	II, 309	III, 660
907	Feeding the Bolt in Shingle-Machines	II, 310	III, 670
908	Gate Latch	I, 458	III, 45
909	Cultivator	I, 307	II, 591
910	Sash-Fastener	I, 489	III, 77
911	Fixtures for Curtain Rollers	II, 382	III, 763
912	Power Loom	I, 540	III, 147
913	Truck for Locomotives	II, 24	III, 271
914	Nut-Machine	I, 479	III, 76
915	Walking-Stick Gun	II, 484	III, 876
916	Vapor Burner	I, 619	III, 212
917	Machine for Making Paper	I, 545	III, 157
918	Coupling of Thills to Vehicles	II, 166	III, 461
919	Coal Stove	I, 650	III, 246
920	Discharging Cannon	II, 466	III, 864
921	Stock for Smoothing-Planes	II, 274	III, 601
922	Opening and Closing Window-Blinds	II, 132	III, 419
923	Operating Slats of Window-Blinds	II, 132	III, 420
924	Steam-Boiler	II, 3	III, 253
925	Cultivator-Teeth	I, 306	II, 594
926	Let-Off Motion of Power Looms	I, 542	III, 153
927	Harvester	I, 327	II, 633
928	File-Cutting Machine	I, 441	III, 24
929	Bobbins for Roving and Slubbing	I, 507	III, 109
930	Sewing-Machine	I, 553	III, 163
931	Factitious Ivory	I, 604	----------
932	Cutting Screws	I, 492	III, 93
933	Sugar-Boilers	I, 615	III, 208
934	Protecting Necks of Horses from Flies	II, 519	III, 908
935	Projectile for Rifled Cannon	II, 487	III, 878
936	Stop-Cock Regulator	I, 597	III, 202
937	Window-Blind Slat-Holder	II, 130	III, 416
938	Operating Window-Blinds	II, 131	III, 418
939	Key	I, 456	III, 42
940	Compound Capstans for Ships	II, 56	III, 318
941	Machine for Forging Nails	I, 475	III, 68
942	Harvester	I, 326	II, 639
943	Propeller-Blade	II, 50	III, 315
944	Self-Feeding Drill	I, 439	III, 21
945	Harvester	I, 327	II, 617
946	Machine for Bevelling Staves	II, 317	III, 677
947	Boot Tree	II, 344	III, 741
948	Shower-Bath Apparatus	II, 489	III, 880
949	Factitious Ivory	I, 604	----------
950	Elastic Gore Cloth	I, 511	III, 109
17,951	Joiners' Plane	II, 273	III, 605

No.	Invention or Discovery.	Text.	Plates.
17,952	Machine for Grinding Knives	I, 457	III, 43
953	Pedestal for Railway Cars and Locomotives	II, 158	III, 449
954	Machine for Cleaning and Carding Moss	I, 510	III, 114
955	Tawing and Coloring Skins and Furs	I, 614	.....
956	Mowing-Machines	I, 359	II, 675
957	Automatic Lubricator for Car Axles	II, 215	III, 521
958	Rotary Veneer-Machine	II, 320	III, 680
959	Dredging-Machine	II, 94	III, 370
960	Glassware Holders	II, 335	III, 694
961	Machine for Hulling Cotton Seed	I, 347	II, 657
962	Water Closet	II, 89	III, 365
963	Feed Rollers for Planing-Machines	II, 276	III, 609
964	Mowing-Machines	I, 359	II, 680
965	Machine for Whetting Plane Bits	II, 270	III, 602
966	Hominy Mill	II, 232	III, 545
967	Curtain Fixtures	II, 380	III, 757
968	Brewers' Steam Boiling Apparatus	I, 583	III, 192
969	Ships' Capstan	II, 46	III, 313
970	Apparatus of Steam Carriages	II, 155	III, 446
971	Ships' Capstan	II, 45	III, 312
972	Automatic Lubricator for Car Axles	II, 216	III, 519
973	Valvular Arrangement in Faucets	II, 174	III, 469
974	Silk-Dyeing Machines	I, 590	III, 195
975	Instrument to indicate the Depth of Water in Ships	II, 59	III, 326
976	Manufacture of Sulphuric Acid	I, 582	.....
977	Reefing Topsails	II, 55	III, 323
978	Filtration Press for Expressing Liquids	II, 217	III, 524
979	Bathing Apparatus	II, 490	III, 881
980	Sausage Cutter	II, 391	III, 774
981	Gas Generator	I, 593	III, 197
982	Safety Tops for Railway Cars	II, 160	III, 451
983	Mechanism for Operating Car-Brakes	II, 139	III, 427
984	Mash-Cooling Machine	I, 606	III, 205
985	Millstone Dress	II, 243	III, 562
986	Lime Kiln	II, 337	III, 708
987	Filter	II, 174	III, 471
988	Steam Gauge	II, 17	III, 274
989	Tea Kettle	I, 635	III, 226
990	Finger-bar for Reaping-Machines	I, 403	III, 737
991	Adjustment for Try-Squares	II, 77	III, 347
992	Smoothing Planed Wooden Surfaces	II, 326	III, 673
993	Machine for Polishing Stone and Glass	II, 339	III, 696
994	Spring Lancet	II, 493	III, 887
995	Winnowing Mill	II, 244	III, 563
996	Press for Shearing and Punching	I, 494	III, 71
997	Marking Time of Attendance of Workmen	II, 83	III, 357
998	Machine for Pegging Boots	II, 345	III, 729
999	Machine for Moulding Bricks	II, 334	III, 705
18,000	Sewing-Machine	I, 563	III, 172
1	Machine for Turning Spools	II, 320	III, 679
2	Hot-Air Furnace	I, 629	III, 225
3	Expanding Auger-Bit	II, 251	III, 572
4	Drop Press	II, 217	III, 524
5	Setting Porcelain Teeth	II, 498	III, 887
6	Tubular Shafting for Mills, &c	II, 245	III, 562
7	Rotary Planing Cutter	II, 275	III, 606
8	Gas Regulator	I, 599	III, 199
9	Raking Apparatus for Harvesters	I, 338	II, 653
10	Grate Bars of Furnaces	I, 628	III, 226
11	Machine for Bending Metal Plates	I, 469	III, 60
18 012	Cooking Stove	I, 652	III, 245

No.	Invention or Discovery.	Text.	Plates.
18,013	Hoops for Ladies' Skirts	II, 504	III, 891
14	Manufacturing Metal Buttons	II, 500	III, 889
15	Eye-Shading Apparatus	II, 491	III, 887
16	Percussion Powder	II, 485	.....
17	Machine for Dressing Saws	II, 302	III, 642
18	Railroad Car-Brake	II, 137	III, 427
19	Machine for Bending Metal Plates	I, 468	III, 59
20	Inhaling Apparatus	II, 492	III, 885
21	Construction of Artificial Hands	II, 492	III, 882
22	Telegraphic Repeater	II, 79	III, 352
23	Railroad Rail	II, 115	III, 401
24	Bakers for Cooking-Stoves	I, 653	III, 246
25	Shears for Cutting Metal	I, 494	III, 108
26	Hot-Air Register	I, 634	III, 229
27	Machine for Twisting Curb-Chains	I, 432	III, 15
28	Portable Horse-Powers	II, 234	III, 547
29	Self-Acting Mules for Spinning	I, 576	III, 188
30	Tanning Liquids	I, 616	.....
31	Filter	II, 175	III, 470
32	Machine for Wetting and Cutting Paper	II, 451	III, 838
33	Combination of Watch-Keys and Finger-Rings	II, 461	III, 845
34	Machinery for Hardening Hat-Bodies	I, 527	III, 138
35	Hermetically Sealing Cans	II, 371	III, 753
36	Umbrellas and Parasols	II, 507	III, 892
37	Piercing Blind-Slats for the Staples	II, 85	III, 360
38	Separating Ore	I, 481	III, 66
39	Swage for Setting Saw Teeth	II, 285	III, 619
40	Brick-Machine	II, 331	III, 711
41	Washing-Machine	II, 402	III, 788
42	Self-Waiting Table	II, 394	III, 777
43	Pin-Sticking Machine	I, 484	III, 83
44	Ships' Berths	II, 41	III, 308
45	Washing-Machine	II, 402	III, 783
46	Rendering Mouths of Trunks, &c., Water-tight	II, 360	III, 725
47	Hay and Manure Fork	I, 316	II, 602
48	Steam-Pressure Regulators	II, 29	III, 274
49	Projectile for Rifled Cannon	II, 486	III, 876
50	Washing-Machine	II, 402	III, 790
51	Cupola Furnace	I, 443	III, 28
52	Cutting Apparatus of Harvesters	I, 334	II, 627
53	Ships' Capstan	II, 47	III, 314
54	Water Vessels for imparting Humidity to Hot Air	I, 630	III, 226
55	Cooking-Range	I, 646	III, 238
56	Photo-galvano graphic Process for Printing	II, 439	.....
57	Boring-Machine	II, 256	III, 577
58	Bending-Machine	I, 425	III, 8
59	Glass-Furnace	II, 335	III, 705
60	Inkstand	II, 412	III, 799
61	Loom	I, 537	III, 147
62	Washing-Machine	II, 402	III, 787
63	Packing of Rotary Steam-Engines	II, 10	III, 259
64	Fence for Poultry-Yards	II, 103	III, 386
65	Vibrating Shears	II, 453	III, 855
66	Clamping Logs in Cross-cut Sawing-Machines	II, 294	III, 640
67	Washing-Machine	II, 403	III, 795
68	Sewing-Machine	I, 563	III, 173
69	Sewing-Machine	I, 564	III, 163
70	Automatic Rake for Harvesters	I, 331	II, 626
71	Sewing-Machine	I, 563	III, 172
72	Sewing-Machine	I, 564	III, 190
18,073	Cultivator	I, 307	II, 598

No.	Invention or Discovery.	Text.	Plates.
18,074	Boot Crimp	II, 343	III, 740
75	Machine for Folding Paper	II, 420	III, 810
76	Machine for Cutting Corn-Stubble	I, 305	II, 595
77	Thills for Two-Wheeled Vehicles	II, 167	III, 461
78	Sealing Cans	II, 371	III, 748
79	Rake	I, 399	II, 768
80	Machine for Wiring Blind-Rods	I, 502	III, 107
81	Machine for Spooling Thread	I, 577	III, 186
82	Coal Sifter	I, 622	III, 215
83	Seeding-Machine	I, 407	II, 753
84	Straw Cutter	I, 418	II, 767
85	Ore Separater	I, 481	III, 79
86	Machine for Washing Bottles	II, 512	III, 896
87	Machine for Swedging Hatchet-Heads	I, 446	III, 34
88	Machine for Sawing Staves	II, 316	III, 675
89	Saw-Clamp	II, 278	III, 610
90	Life-Preserving Berths	II, 50	III, 312
91	Device for Locking Faucets	II, 174	III, 469
92	Animal Traps	II, 525	III, 911
93	Operating the Cutters of Harvesters	I, 344	II, 620
94	Spirit Still	I, 615	III, 208
95	Surf and Life Boat	II, 45	III, 310
96	Raking Device for Harvesters	I, 340	II, 651
97	Hub for Carriage Wheels	II, 152	III, 443
98	Feed Movement for Sawing Mills	II, 297	III, 647
99	Sack Fastener	II, 247	III, 567
100	Chimney Caps	I, 620	III, 213
101	Shower-Bath Apparatus	II, 490	III, 881
102	Sewing-Machine	I, 565	III, 166
103	Gas Regulator	I, 599	III, 202
104	Cotton-Seed Planter	II, 529	II, 704
105	Lantern	I, 642	III, 234
106	Adjusting Carriage-Tops	II, 151	III, 442
107	Attaching Whiffle-Trees to Tow-Lines	II, 41	III, 306
108	Smoothing-Irons	II, 387	III, 772
109	Portable Gas Generator	I, 595	III, 198
110	Drawing the Curve of Circular Stair Railings	II, 124	III, 410
111	Casting Bearings in Iron Wheels	I, 429	III, 9
112	Socket Coupling for Lathes	II, 266	III, 590
113	Apparatus for Suspending Eave-Troughs	II, 97	III, 376
114	Machine for Planing Saw-Teeth	II, 284	III, 619
115	Machine for Forging Metals	I, 472	III, 63
116	Pipe Coupling	I, 485	III, 83
117	Percussion-Cap Primers	II, 466	III, 863
118	Removing Stores, &c., in case of Fire	II, 125	III, 411
119	Attaching Scythes to Snaths	I, 405	II, 746
120	Sliding Rest for Lathes	II, 266	III, 590
121	Condenser for List-Speeder	I, 533	III, 136
122	Head-Rests for Railroad Car Seats	II, 143	III, 430
123	Crozing and Chamfering Staves	II, 315	III, 673
124	Carding Engine	I, 507	III, 110
125	Coal-Sifter	I, 622	III, 219
126	Seed-Planter	I, 377	II, 688
127	Corn-Planter	I, 367	II, 688
128	Corn-Planter	I, 367	II, 692
129	Tubes for Steam-Pressure Gauges	II, 19	III, 380
130	Cutting Figures out of Sheet Metal	I, 471	III, 61
131	Telegraphic Wires in Metallic Tubing	II, 81	III, 355
132	Reversible Railroad Car-Coupling	II, 140	III, 428
133	Manufacturing Verdigris	I, 617	.....
18,134	Gas Retort	I, 600	III, 900

No.	Invention or Discovery.	Text.	Plates.
18,135	Wrench	I, 504	III, 91
136	Metallic Packing for Pistons of Steam Engines	II, 12	III, 264
137	Machine for Drying Grain	II, 232	III, 549
138	Tightening Tires of Carriage Wheels	II, 170	III, 462
139	Corn-Sheller	I, 304	II, 592
140	Seed-Planter	I, 377	II, 695
141	Mowing-Machine	I, 360	II, 682
142	Vapor Lamp	I, 641	III, 229
143	Cartridge for Breech-Loading Fire Arms	II, 468	III, 867
144	Ramming under the Cross-ties of Railroads	II, 116	III, 402
145	Hand Seed-Planter	I, 372	II, 683
146	Straw Cutter	I, 419	II, 770
147	Attaching Wires to Bell Telegraphs	II, 81	III, 350
148	Corn Planter	II, 529	II, 688
149	Punching Paper Fillets for Telegraphic Signals	II, 80	III, 354
150	Automatic Railroad Car-Brake	II, 138	III, 426
151	Sheep-Shearing Machine	I, 413	II, 762
152	Machine for Lasting Boots and Shoes	II, 345	III, 716
153	Wear-Iron for Carriages	II, 156	III, 447
154	Extension Gas Tubes	I, 601	III, 205
155	Sash-Lock	I, 460	III, 44
156	Machine for Forging Nuts	I, 479	III, 77
157	Bolts for Safes	I, 426	III, 4
158	Scythe Snaths	I, 405	II, 740
159	Signals for Steamboats	II, 77	III, 345
160	Wash Mixtures for Woollens, &c	I, 606	.....
161	Mortising Chisel	II, 259	III, 580
162	Lock	I, 464	III, 50
163	Grinding-Mill	II, 243	III, 560
164	Door-Spring	I, 437	III, 19
165	Churns	I, 301	II, 588
166	Brick-Machine	II, 331	III, 704
167	Blast Furnace	I, 442	III, 26
168	Washing-Machine	II, 403	III, 789
169	Padlock	I, 459	III, 47
170	Machine for Pegging Boots and Shoes	II, 346	III, 736-37
171	Manufacturing Wooden Washboards	II, 323	III, 690
172	Saccharine Evaporators	I, 613	III, 209
173	Harvester	I, 327	II, 622
174	Culivator Teeth	II, 528	II, 601
175	Type Setting and Distributing Machine	II, 458	.....
176	Machine for Hulling Rice	II, 247	III, 564
177	Machine for Cleaning Rice	II, 247	III, 566
178	Grinding Mill	II, 237	III, 555
179	Flour Bolt	II, 227	III, 548
180	Machine for Kneading Dough	II, 382	III, 774
181	Machine for Hardening Hat Bodies	I, 526	III, 133
182	Sustaining Window-Sash	II, 133	III, 417
183	India Rubber Paint	I, 607	.....
184	Gas Generator	I, 593	III, 198
185	Excavator	I, 100	III, 383
186	Mastic Roofing	II, 120	.....
187	Mowing Machines	I, 360	II, 677
188	Raking Attachment for Reapers	I, 404	II, 743
189	Invalid Bed	II, 365	III, 746
190	Making Paper Pulp from Ivory	I, 546	.....
191	Hanging Mill-Stones	II, 241	III, 559
192	Ships' Pumps	II, 57	III, 324
193	Socket for Bolts	I, 427	III, 7
194	Machine for Expanding Spectacle-Bows	II, 77	III, 348
18,195	Street-Sweeping Machine	II, 523	III, 911

No.	Invention or Discovery.	Text.	Plates.
18,196	Bridge	II, 87	III, 361
197	Operating Valves of Steam Engines	II, 37	III, 301
198	Painters' Easel	II, 409	III, 797
199	Safety-Fuse Compositions	I, 587	.....
200	Operating Window-Sash	II, 133	III, 420
201	Coolers for Breweries	I, 583	III, 193
202	Feathering Paddle-Wheels	II, 56	III, 317
203	Treating Cotton and Linen Waste	I, 616	.....
204	Treating Fibrous and Textile Substances	I, 521	III, 127
205	Machine for Pointing Wire	I, 502	III, 100
206	Belt Tool	I, 425	III, 1
207	Spoke-Machine	II, 311	III, 666
208	Harness for Looms	I, 539	III, 149
209	Composition for Tracing-Muslin	II, 455	.....
210	Regulating Velocity of Wind-Wheels	II, 206	III, 507
211	Valve Gear for Oscillating Engines	II, 31	III, 301
212	Tenoning Machine	II, 318	III, 683
213	Watchmakers' Lathe	II, 461	III, 857
214	Boxes for Preserving Alkalies	I, 582	.....
215	Drip-Pots for Sugar-Houses	I, 616	III, 197
216	Illuminating-Gas Apparatus	I, 591	III, 196
217	Ball Cartridge	II, 468	III, 867
218	Diaphragms for Photographic Cameras	II, 424	III, 814
219	Reefing and Furling Sails	II, 54	III, 321
220	Brewers' Coolers	I, 583	III, 194
221	Raking Attachment for Reapers	I, 404	II, 736
222	Manufacturing Shingles	II, 311	III, 664-5
223	Controlling Cog-Gear Sash Balance	II, 123	III, 408
224	Saw-Filer	I, 489	III, 74
225	Working Steam Valves by Direct Action	II, 39	III, 301
226	Brick-Machine	II, 331	III, 697
227	Boot and Shoe Sole-Cutter	II, 341	III, 715
228	Lock	I, 465	III, 51
229	Cutting Apparatus for Harvesters	I, 335	II, 643
230	Gas-Burner	I, 632	III, 225
231	Machine for Binding Grain	I, 317	II, 609
232	Horse Power	II, 233	III, 545
233	Life-Boat	II, 43	III, 307
234	Bearings for Mill-Stone Drivers	II, 239	III, 550
235	Metallic Packing-Rings for Steam Engines	II, 12	III, 267
236	Burglar's Alarm	II, 513	III, 897
237	Edge-Plane for Boot and Shoe Soles	II, 342	III, 728
238	Reaping and Mowing Machine	I, 402	II, 745
239	Portfolio or Music Stand	II, 433	III, 822
240	Harvester	I, 328	II, 627
241	Steam-Heating Apparatus	I, 646	III, 239
242	Apparatus for Loading Logs on Wagons	II, 169	III, 465
243	Lock	I, 465	III, 53
244	Making White-Lead	I, 610	III, 210
245	Safety-Clasp for Bracelets, &c	II, 406	III, 796
246	Stirrups for Riding-Saddles	II, 357	III, 723
247	Sleeve-Fastener	II, 504	III, 893
248	Journals of Axles with Friction-Rollers	II, 136	III, 421-2
249	Hand-Stamp	II, 454	III, 852
250	Machine for Filing and Setting Saws	II, 302	III, 651
251	Connecting and Disconnecting Pavement-Blocks	II, 113	III, 399
252	Railroad Car Seats	II, 143	III, 435
253	Trussed Bridge	II, 86	III, 358-9
254	Carriage-Prop	II, 148	III, 438
255	Rotary Steam-Engine	II, 9	III, 265
18,256	Rake for Harvesters	I, 337	II, 650

No.	Invention or Discovery.	Text.	Plates.
18,257	Carding-Engines	I, 508	III, 111
258	Valve-Gear for Oscillating-Engines	II, 31	III, 295
259	Nut-Machine	I, 477	III, 72
260	Diving-Apparatus	II, 47	III, 314
261	Fly-Trap	II, 524	III, 914
262	Fire-Escape Ladder	II, 517	III, 902
263	Cooler	II, 378	III, 759
264	Machine for Distributing Type	II, 457	III, 858
265	Pencil-Sharpener	II, 423	III, 815
266	Wrench	I, 504	III, 105
267	Harvester	I, 327	II, 632
268	Lathes for making Clothes-Pins, &c	II, 265	III, 592
269	Holding the Log in Circular Sawing-Machines	II, 293	III, 634,5,6
270	Composition for Covering Meats	I, 586	----------
271	Lard-Rendering Kettle	I, 604	III, 209
272	Steam-Pressure Gauge	II, 18	III, 275
273	Apparatus for Opening Oysters	II, 520	III, 909
274	Life-Preserver	II, 49	III, 316
275	Cribs of Horses' Stables	II, 124	III, 409
276	Boiler	II, 3	III, 252
277	Fastenings for Jewelry	II, 413	III, 800
278	Preparing Roofing Cements	II, 119	III, 405
279	Factitious Oils	I, 606	----------
280	Hydraulic Engine	II, 181	III, 479
281	Coating Hose-Pipe	I, 585	III, 195
282	Bit-Holder	II, 254	III, 575
283	Approach-Opening Gate	II, 106	III, 391-2
284	Reed-Stops for Musical Instruments	II, 417	III, 812
285	Sewing-Machine	I, 565	III, 174
286	Cork-Sole Stuff	I, 589	----------
287	Machine for Cutting Bungs	II, 258	III, 581-2
288	Setting Diamonds	II, 408	III, 797
289	Gas-Burner	I, 632	III, 219
290	Hame-Tug Fastening	II, 350	III, 719
291	Seamless Uppers of Boots and Shoes	II, 347	III, 733
292	Burglars' Alarms	II, 513	III, 909
293	Separating Oily Matters from Water	II, 196	III, 498
294	Spikes	I, 496	III, 106
295	Apparatus to Protect Buildings from Fire	II, 516	III, 901
296	Corn-Sheller	I, 304	II, 594
297	Apparatus for Roasting on Cooking-Stoves, &c	I, 653	III, 248
298	Machine for Manufacturing Pottery-Ware	II, 338	III, 693
299	Fastening Metal Bands of Cotton Bales, &c	II, 208	III, 514
300	Awning-Frames for Horses	II, 352	III, 720
301	Construction of Wire Fences	II, 105	III, 388
302	Stemming and Polishing Peanuts	I, 417	II, 765
303	Hemp Brake	I, 531	III, 138
304	Window for Locomotives	II, 24	III, 290
305	Drilling and Milling Machine	II, 260	III, 585
306	Attaching Elastic Soles to Horse-Shoes	I, 451	III, 34
307	Hydrocarbon Vapor Lamp	I, 636	III, 224
308	Opening and Closing Gates	II, 109	III, 393
309	Pump	II, 188	III, 486
310	Hollow Metallic Lasts	II, 354	III, 719
311	Variable Excentrics for Steam-Engine Valves	II, 37	III, 299
312	Attaching Adjustable Handles to Joiners' Planes	II, 273	III, 603
313	Machine for Measuring Cloth	II, 74	III, 336
314	Marine Propelling Apparatus	II, 51	III, 319
315	Tank for Locomotives	II, 24	III, 269
316	Forming and Hardening Hat Bodies	I, 525	III, 133
18,317	Grain-Drill	I, 312	II, 604

No.	Invention or Discovery.	Text.	Plate.
18,318	Brick Press	II, 332	III, 707
319	Steam Generator	II, 27	III, 278-9
320	Power Loom	I, 541	III, 152
321	Stove-Cover Stands	I, 647	III, 244
322	Machine for Packing Wool	II, 216	III, 522
323	Curtain-Rollers	II, 392	III, 763
324	Saw-Filing Machine	II, 280	III, 611-12
325	Corn-Sheller	II, 527	II, 591
326	Attaching Scythes to Snaths	I, 405	II, 746
327	Manufacture of Metallic Squares	II, 77	III, 347
328	Machine for Packing Wool	II, 217	III, 523
329	Reaping and Mowing Machine	I, 402	II, 737
330	Cultivator	I, 307	II, 600
331	Corn-Husker	I, 351	II, 660
332	Corn-Husker	I, 347	II, 670
333	Seed-Planter	I, 379	II, 703
334	Seed-Planter	I, 378	II, 713
335	Plough	I, 386	II, 716
336	Hill-Side Plough	I, 394	II, 727
337	Curry-Combs	I, 434	III, 21
338	Bronzing Liquids	I, 584	----
339	Rake	I, 399	II, 732
340	Guard-Finger for Reaping Machines	I, 403	II, 738
341	[Suspended.]	----	----
342	Machine for Shucking and Shelling Corn	I, 305	II, 592
343	Gang-Plough	I, 393	II, 727
344	Seed-Planter	I, 378	II, 709
345	Joiners' Bench	II, 252	III, 573
346	Seeding-Machine	I, 407	II, 745
347	Melting and Refining Iron	I, 455	----
348	Locomotive Cow-Catcher	II, 20	III, 289
349	Appendages to Shower-Baths	II, 490	III, 881
350	Sewing-Machine	I, 566	III, 176
351	Sod-Cutter	I, 414	II, 766
352	Rock Cutting and Drilling Machine	II, 94	III, 372
353	Extension-Elevator	II, 210	III, 516
354	Machine for Sawing Shingles	II, 298	III, 648
355	Plough	I, 386	II, 716
356	Hot-Air Register	I, 635	III, 227
357	Spring-Bed Bottoms	II, 365	III, 747
358	Corn-Husker	I, 348	II, 670
359	Sewing-Machine	I, 567	III, 175
360	Seed-Sowing Machine	I, 411	II, 759
361	Corn-Sheller	I, 304	II, 589
362	Coal-Stove	I, 650	III, 244
363	Machine for Picking Cotton in the Field	I, 362	II, 681
364	Lubricating Carriage-Axles	II, 214	III, 518
365	Fountain-Pen	II, 422	III, 813
366	Seed-Planter	I, 379	II, 705
367	Oil-Pressing Machinery	II, 223	III, 536
368	Wind-Wheel	II, 201	III, 504-5
369	Balancing Threshing Cylinders	I, 420	II, 757
370	Wood-Boring Machine	II, 257	III, 580
371	Sewing-Machine	I, 566	III, 177
372	Cutting Metal Caps for Nail-Heads	I, 466	III, 54
373	Rotary Exhaust-Regulator for Locomotives	II, 23	III, 292
374	Machine for Cleaning Rice	II, 246	III, 565
375	Railroad Car Seats	II, 143	III, 434
376	Sash-Supporter	II, 123	III, 409
377	Folding Chair for Pews	II, 374	III, 758
18,378	Saw-Filer	II, 279	III, 612

No.	Invention or Discovery.	Text.	Plates.
18,379	Machine for Bending Wood	II, 324	III, 687
380	Machine for Separating Slate, &c., from Coal	I, 621	III, 214
381	Preparing Fats for Candle-making	I, 584	----------
382	Churn-Dashers	I, 300	II, 585
383	Arrangement of Self-Dumping Trucks	II, 127	III, 413
384	Churns	I, 302	II, 586
385	Corn-Husker	I, 352	II, 663
386	Wagon-Brake	II, 167	III, 462
387	Hair-Triggers for Fire-Arms	II, 476	III, 879
388	Ore-Separator	I, 482	III, 80, 81
389	Preparing Paper-Pulp from Beet Refuse	I, 546	----------
390	Harvester	I, 328	II, 634
391	Twine-Reels	I, 577	III, 184
392	Manufacture of Artificial Hones	II, 335	III, 698
393	Seed-Planter	I, 379	II, 703
394	Saw-Mill	II, 281	III, 613
395	Apparatus for Rescuing Horses from Fire	II, 84	III, 359
396	Corn-Husker	I, 351	II, 667
397	Gang-Plough	I, 393	II, 729
398	Ditching-Machine	II, 90	III, 365
399	Melodeon	II, 416	III, 807
400	Implement for Sealing Railroad-Cars, &c	II, 160	III, 452
401	Projectiles for Rifled Ordnance	II, 488	III, 877
402	Guiding the Legs in Sawing Curvatures	II, 286	III, 621
403	Fastening Shafts and Poles to Carriages	II, 155	III, 444
404	Digging-Machine	II, 90	III, 366
405	Harvester	I, 328	II, 635
406	Ore-Washer	I, 483	III, 77
407	Washing-Machine	II, 403	III, 793
408	Machine for making Hammers	I, 446	III, 32
409	Coating Iron	I, 610	----------
410	Cotton-Gin Feeder	I, 516	III, 116
411	Means for flooding Vessels	II, 62	III, 330
412	Elastic Coupling for Mill-Shafting	II, 238	III, 556
413	Hominy-Machine	II, 518	III, 912
414	Gas Generator	I, 594	III, 199
415	Saw-Filer	II, 279	III, 610
416	Street-Sweeper	II, 523	III, 907
417	Cellular Iron Pavements	II, 112	----------
418	Lock for Fire-Arms	II, 476	III, 876
419	String Fastening for Sacks, &c	II, 247	III, 570
420	Water-Gauges for Steam-Boilers	II, 8	III, 253
421	Hose Carriage	II, 147	III, 436
422	Grater	II, 385	III, 764
423	Carding-Machine	I, 509	III, 112
424	Bomb-Shell	II, 464	III, 862
425	Water Indicators for Steam-Boilers	II, 8	III, 254
426	Detaching Horses from Vehicles	II, 166	III, 460
427	Lasting-Pincers	II, 353	III, 725
428	Polishing the Heads of Trunk Nails	I, 475	III, 69
429	Bakers' Ovens	I, 644	III, 236-7
430	Coal-Sifter	I, 622	III, 216
431	Constructing the Tires of Wagon-Wheels	II, 168	III, 462
432	Furnace	I, 625	III 218
433	Corn-Husker	I, 352	II, 658
434	Stove and Furnace Grates	I, 649	III, 242
435	Rubbers of Railroad Car-Brakes	II, 140	III, 424
436	Beating Peanuts from their Vines	I, 421	II, 773
437	Rake for Harvesters	I, 337	II, 642
438	Dumping Wagon	II, 168	III, 464
18,439	Machine for Sowing Seed Broadcast	I, 415	II, 757

No.	Invention or Discovery.	Text.	Plates.
18,440	V ne for Wind-Wheels	II, 205	III, 511
441	Machine for Striping Leather, &c	II, 356	III, 716
442	Cotton Cultivator	I, 311	II, 602
443	Sawing-Machine	II, 288	III, 624
444	Screens for Grain-Separators	II, 232	III, 540
445	Wristband Fastener	II, 507	III, 891
446	Steam Plough	I, 396	II, 726
447	Corn-Husker	I, 348	II, 671
448	Wheelwright-Machine	II, 169	III, 466
449	Mode of Closing Farm Gates	II, 108	III, 390
450	Seed-Planter	I, 380	II, 699
451	Carriage-Spring	II, 148	III, 439
452	Bending Flanges on Boiler-Heads	I, 425	III, 4
453	Piano-forte Action	II, 429	III, 817
454	Cotton-Cleaner	I, 514	III, 121
455	Endless Aprons of Threshing-Machines	I, 421	II, 768
456	Shades for Lamps	I, 640	III, 229
457	Nail-Machine	I, 474	III, 64
458	Harpoon	II, 48	III, 315
459	Plough	I, 388	II, 718
460	Steam Generator	II, 28	III, 282
461	Manufacture of Cotton Yarns	I, 518	III, 186
462	Swathing Apparatus for Harvesters	I, 341	II, 615
463	Plough	I, 387	II, 737
464	Grain Cradle	I, 318	II, 611
465	Air and Vapor Burner	I, 618	III, 211
466	Automatic Caster and Fan	II, 373	III, 755
467	Steam Boiler	II, 4	III, 254
468	Steam Plough	I, 396	II, 721
469	Coal Stove	I, 651	III, 245
470	Sewing-Machine	I, 567	III, 176
471	Cultivator Teeth	I, 306	II, 601
472	Breech-Loading Fire-Arm	II, 474	III, 872
473	Corn-Husking Machine	I, 356	II, 669
474	Reciprocating Mill Saw	II, 282	III, 614
475	Plough	I, 387	II, 713
476	Apple Slicer	II, 361	III, 742
477	Printing-Press	II, 439	III, 831
478	Cotton Cultivator	I, 312	II, 604
479	Machine for Spading Land	I, 416	II, 764
480	Plough	I, 387	II, 731
481	Core Spindle for Casting	I, 429	III, 11
482	Cotton-Seed Planter	I, 370	II, 708
483	Washing-Machine	II, 396	III, 781
484	Smut-Machine	II, 250	III, 569
485	Amalgamator	I, 423	III, 1
486	Priming Repeating Fire-Arms	II, 480	III, 876
487	Manufacturing Seamless Felt Garments	I, 520	III, 124
488	Rotary Pump	II, 191	III, 493
489	Washing-Machine	II, 396	III, 782
490	Chain-Machine	I, 431	III, 14
491	Furnace	I, 625	III; 217
492	Seeding-Machine	I, 407	II, 747
493	Feather-Dressing Machine	II, 385	III, 769
494	Construction of Railways	II, 117	III, 404
495	Machine for Sowing Seed Broadcast	I, 416	II, 762
496	Machine for Brushing Rice	II, 245	III, 565
497	Butter-Worker	II, 527	II, 581
498	Metallic Screw Cap for Jars, &c	II, 388	III, 770
499	Nut-Machine	I, 478	III,72,73
18,500	Cane Umbrella	II, 507	III, 892

No.	Invention or Discovery.	Text.	Plates.
18,501	Machine for Breaking Coal	I, 621	III, 214
502	Steam Cotton Press	II, 218	III, 526
503	Fruit Gatherer	I, 316	II, 604
504	Printing-Machine	II, 437	III, 826
505	Severing Ears of Corn from the Stalks	I, 302	II, 582
506	Rotary Shears	I, 495	III, 97
507	Water-Wheel	II, 198	III, 499
508	Corn Planter	I, 368	II, 686
509	Grinding and Polishing Machine	I, 445	III, 30
510	Mowing-Machine	I, 360	II,678,9
511	Sewing-Machine	I, 568	III, 177
512	Shingle-Machine	II, 309	III, 661
513	Iron Spoons	II, 392	III, 778
514	Fastening Metal Bands for Cotton Bales, &c	II, 208	III, 513
515	Railroad Car-Spring	II, 144	III, 435
516	Operating Railroad Brakes	II, 137	III, 425
517	Iron Spoon	II, 392	III, 776
518	Washing-Machine	II, 397	III, 781
519	Railroad Chair	II, 162	III, 454
520	Cultivator	I, 308	II, 598
521	Reversing the Chisel in Mortising-Machines	II, 268	III, 597
522	Sewing-Machine	I, 568	III, 167
523	Bee-Hive	I, 295	II, 579
524	Seed-Planter	II, 530	.....
525	Cotton Scraper	I, 405	II, 701
526	Steam-Pressure Gauge	II, 18	III, 276
527	Hand Printing-Press	II, 449	III 860
528	Machine for Making Brushes	II, 370	III, 753
529	Machinery for Spinning Flax and Hemp	I, 576	III, 187
530	Cultivator	I, 308	II, 598
531	Lime Kiln	II, 337	III, 701
532	Feed-Water Pipe in Bed of Steam Engine	II, 9	III, 261
533	Machine for Folding Paper	II, 421	III, 811
534	Machine for Making Bolts	I, 427	III, 6
535	Reversing the Chisel in Mortising Machines	II, 269	III, 600
536	Curtain Fixtures	II, 380	III, 759
537	Rose for Door-Knobs	I, 436	III, 18
538	Mixing and Grinding Oil Paints	I, 608	III, 210
539	Apparatus for Unloading Vessels	II, 65	III, 335
540	Hoisting Bucket	II, 211	III, 519
541	Candy Twisting Machine	II, 514	III, 898
542	Machine for Bending Metal Plates	II, 532	III, 56
543	Smoothing-Iron	II, 386	III, 771
544	Violin Attachment	II, 460	III, 842
545	Printing-Press	II, 446	III, 843–44
546	Water-Cooling Pitcher	II, 390	III, 773
547	Operating Scroll Saws	II, 305	III, 665
548	Iron Truss Frames for Bridges, &c	II, 88	III, 363
549	Chamfering and Crozing Barrels	II, 251	III, 572
550	Water Closet	II, 89	III, 364
551	Rotary Excavator	II, 101	III, 382
552	Cleaning and Polishing Coffee	II, 515	III, 903
553	Expanding Tires	I, 500	III, 93
554	Iron Shutters for Doors, Windows, &c	II, 92	III, 368
555	Canal-Lock Gates	II, 111	III, 396–97
556	Tightening Tires on Carriage Wheels	II, 153	III, 443
557	Hand Printing-Press	II, 443	III, 836
558	Joints of Carriage Tops	II, 151	III, 442
559	Pump	II, 188	III, 491
560	Barometer	II, 68	III, 339
18,561	Rock Drill	II, 96	III, 373–4

No.	Invention or Discovery.	Text.	Plates.
18,562	Harvester	I, 329	II, 637
563	Vane Governor for Steam Engines	II, 16	III, 275
564	Machine for Burring Wool on the Pelt	I, 579	III, 188
565	Folding Iron Bedsteads	II, 368	III, 750
566	Sewing-Machine	I, 568	III, 180
567	Printing-Press	II, 446	III, 840-41-42
568	Projectile	II, 487	III, 879
569	Forming Round Tenons on Blind Slats	II, 130	III, 416
570	Sewing-Machine	II, 288	III, 625-26
571	Corn-Husker	I, 349	II, 656 and 663-4
572	Determining Approximate Latitude at Sea	II, 73	III, 351
573	Earth-Moving Machine	II, 97	III, 377
574	Distributing Apparatus in Flouring Mills	II, 235	III, 551
575	Hoisting Apparatus for Bricks, &c	II, 211	III, 530
576	Machine for Pulling Beans	I, 295	II, 580
577	Rails for Railways	II, 118	II, 404
578	Attaching Steam Gauges to Locomotive Boilers	II, 20	III, 267
579	Seeding-Machine	I, 408	II, 750
580	Stove for Burning Tan, Sawdust, &c	I, 654	III, 247
581	Apparatus for Holding Music, &c	II, 417	III, 814
582	Fruit Gatherer	I, 316	II, 611
583	Water-proof Soles and Heels for Boots and Shoes	II, 347	III, 738
584	Corn-Husker	I, 349	II, 666
585	Springs for Mattresses, Chairs, &c	II, 389	III, 771
586	Cooking Stove	I, 652	III, 246
587	Cultivator	I, 308	II, 599
588	Machine for Turning Spiral Forms	II, 319	III, 679
589	Feeding Paper to Printing-Presses	II, 448	III, 856
590	Grain Drill	I, 312	II, 606
591	[Suspended]		
592	Lifting-Jack	II, 213	III, 519
593	Spring Hinge	I, 448	III, 34
594	Patterns for Boots and Shoes	II, 345	III, 734
595	Fire Plugs	II, 176	III, 472
596	Ploughing-Machine	I, 384	II, 714
597	Cutting Bread	II, 369	III, 751
598	Protecting Trees from Canker Worms	I, 422	II, 753
599	Lateral Feed Motion for Sawing Mills	II, 359	III, 730
600	Digging Plough	I, 392	II, 724
601	Harness Buckle	II, 350	III, 723
602	Signal Lantern	I, 642	III, 232
603	Seeding-Machine	I, 408	II, 761
604	Tree Protector	III, 923	II, 755
605	Sewing-Machine	I, 569	III, 177
606	Candlestick	I, 620	III, 213
607	Husking Palm	I, 356	II, 669
608	Instrument for Surveying and Calculating Areas	II, 78	III, 349
609	Plough	I, 388	II, 722
610	Grinding Mill	II, 237	III, 556
611	Window-Sash	II, 133	III, 417
612	Clamp for Centring Hubs for Boring	II, 263	III, 590
613	Generating Anhydrous Steam	II, 26	III, 277-80
614	Last Holder	II, 353	III, 719
615	Revolving Snow-Excavators for Railroads	II, 164	III, 456-7
616	Bullet-Machine	II, 464	III, 863
617	Horse-Shoe Nail Machine	I, 473	III, 66
618	Printing-Press	II, 447	III, 852
619	Sub-soil Plough	I, 397	II, 720
18,620	Machinery for Dressing Warps	I, 578	III, 185

No.	Invention or Discovery.	Text.	Plates.
18,621	Quilting Frame	II, 390	III, 782
622	Lard-Rendering Kettle	I, 605	III, 206
623	Apparatus for Ringing Bells	II, 509	III, 894
624	Straw-Cutter	I, 419	II, 772
625	Device for Husking Corn	I, 353	II, 657
626	Device in Telegraphic Fire-Alarm Apparatus	II, 79	III, 350–51
627	Elastic Door-Guard	II, 91	III, 369
628	Harvesting-Machine	I, 342	II, 630
629	Brick-Machine	II, 327	III, 714
630	India-rubber Springs for Upholstering	II, 395	III, 794
631	Carpet Fastener	II, 372	III, 752
632	Clothes Clamp	II, 377	III, 756
633	Washing-Machine	II, 397	III, 785
634	Breech-Loading Fire-Arm	II, 475	III, 871
635	Lime-Kiln	II, 337	III, 708
636	Extension Table	II, 393	III, 777
637	Flour-Distributing Bolt for Grinding Mill	II, 238	III, 557
638	Hemp-Cutter	I, 531	III, 140
639	Sewing-Machine	I, 569	III, 178
640	Operating Fly-Frames of Printing-Presses	II, 448	III, 850
641	Mechanism for Operating Pilot-Bells	II, 30	III, 293–4
642	Washing-Machine	II, 397	III, 780
643	Portable Forge	I, 441	III, 26
644	Corn-Husker	I, 350	II, 667–8
645	Pitcher for Molasses	II, 390	III, 772
646	Machine for Turning Wooden Boxes	II, 326	III, 689–90
647	Cake-Cutter	II, 371	III, 754
648	Gas-Meter Indicator	I, 596	III, 198
649	Butter Worker	I, 297	II, 583
650	Fastening for Machine Belting	II, 227	III, 537
651	Adjusting Band-Saws to Circular Stocks	II, 304	III, 654
652	Self-Feeding Drill	I, 314	III, 22
653	Tooth Brush	II, 394	III, 778
654	Key for Door-Locks	I, 456	III, 41
655	Steam-Pressure Gauge	II, 18	III, 282
656	Machine for Husking Corn	I, 356	II, 661
657	Hemp Brake	I, 531	III, 139
658	Corn-Husker	I, 349	II, 665
659	Apparatus for Harvesters	I, 334	II, 642
660	Ventilating Attachment to Pumps	II, 193	III, 496
661	Machine for Turning Pillars for Clocks	II, 68	III, 340
662	Corn-Husker	I, 350	II, 664
663	Steering-Apparatus	II, 60	III, 326
664	Street-Sweeping Machine	II, 523	III, 905–6
665	Calendar Clock	II, 70	III, 341–42
666	Machine for Covering Sugar-Cane	I, 298	II, 584
667	Slide Valves for Steam-Engines	II, 38	III, 303
668	Preparing Engraved Plates for Printing	II, 435	.....
669	Screwing Tubes into Vacuum Pans	I, 492	III, 96
670	Hay and Manure Fork	I, 316	II, 607
671	Churn	I, 298	II, 584
672	Ore Separator	I, 482	III, 82
673	Piano-forte	II, 431	III, 820
674	Applying Hot Water to Journals of Rolling Mills	I, 488	III, 89
675	Arithmometer for Adding	II, 67	III, 337,8,9
676	Couplings for Melodeons	II, 416	III, 808
677	Metallic Roofing for Subterranean Vaults	II, 121	III, 407
678	Many-Chambered Rotating Breech Fire-Arm	II, 479	III, 875
679	Machine for Cutting Shingles	II, 311	III, 663
680	Spoke-Machine	II, 312	III, 668
18,681	Shingle-Machine	II, 310	III, 662

No.	Invention or Discovery.	Text.	Plates.
18,682	Plough	I, 389	II, 715
683	Stopping and Starting Ferry-boats	II, 42	III, 307
684	Machine for Filing Saws	I, 490	III, 90, 91
685	Skates	II, 521	III, 907-8
686	Harvester Rake	I, 320	II, 624
687	Machine for Slating Coal	I, 622	III, 216
688	Measuring Apparatus of Seed-Drills	I, 314	II, 608
689	Levelling Instrument for Ditching	II, 90	III, 367
690	Seed-Drill	I, 313	II, 605
691	Floating Horses, &c., across Rivers	II, 519	III, 904
692	Arithmometer	II, 67	III, 336
693	Boilers for Heating Buildings	I, 618	III, 211
694	Attaching Paddle-Wheels to Canal-Boats	II, 41	III, 305
695	Washing-Machine	II, 398	III, 788
696	Ventilating Rocking-Chair	II, 375	III, 756
697	Bean-Harvester	I, 331	II, 625
698	Gang-Plough	I, 393	II, 732
699	Painters' Striping Instrument	II, 418	III, 808
700	Corn-Sheller	I, 304	II, 590
701	Pendulum Quadrant	II, 76	III, 354
702	Shelving for Curing and Storing Cheese	I, 298	II, 583
703	Arrangement in Sash-Balance	II, 123	III, 409
704	Safety-Lamp	I, 639	III, 230
705	Pump-Packing	II, 184	III, 483
706	Machine for Making Cigar-Lighters	II, 514	III, 899, 900
707	Projectile for Fire-Arms	II, 485	III, 874
708	Truss	II, 499	III, 885
709	Scissors-Sharpener	II, 521	III, 908
710	Coffee-Roaster	II, 378	III, 763
711	Machine for Multiplying Numbers	II, 75	III, 346
712	Arrangement of Cylinders for Locomotives	II, 21	III, 286-7
713	Candle-Snuffers	II, 392	III, 776
714	Cultivator	I, 309	II, 603
715	Automatic Railroad Brake	II, 136	III, 423-4
716	Seed-Planter	I, 381	II, 701
717	Seed-Planter	I, 381	II, 702
718	Steam Pumping Engine	II, 185	III, 485, 6, 7
719	Vapor-Burning Lamps	I, 641	III, 231
720	Washing-Machine	II, 398	III, 791
721	Washing-Machine	II, 398	III, 789-90
722	Rotary-Chair	II, 376	III, 756
723	Machine for Making Dough	II, 383	III, 765, 6, 7
724	Preparing Glue Stock	I, 609	----
725	Knitting-Machine	I, 532	III, 142
726	Plough	I, 390	II, 719
727	Speed-Indicator	II, 250	III, 571
728	Surveying-Level	II, 78	III, 347
729	Composition Fuel	I, 624	----
730	Seeding-Machine	I, 408	II, 751
731	Hay-Rake	I, 400	II, 739
732	Sewing-Machine	I, 569	III, 180
733	Extension-Table	II, 393	III, 795
734	Regulating Action of Fly-Wheel	II, 234	III, 550
735	Seeding-Machine	I, 408	II, 747-8
736	Rake for Harvesters	I, 336	II, 643
737	Cooking-Stove	I, 653	III, 247
738	Pile for Rolling Beams	I, 487	III, 83
739	Cultivator	I, 309	II, 599
740	Revolving Bottle-Casters	II, 373	III, 754
741	Balance Iron for Mill-Stones	II, 239	III, 552
18,742	Long Trunks for Cleaning Cotton	I, 515	III, 122

No.	Invention or Discovery.	Text.	Plates.
18,743	Dumping-Car	II, 141	III, 431–2
744	Printing-Press	II, 440	III, 830
745	Machine for Sawing Bevelled Curves	II, 285	III, 620–1
746	[Suspended]	.....	.....
747	Corn-Harvester	I, 332	II, 646
748	Standard for Seats	II, 392	III, 775
749	Gang-Plough	I, 394	II, 730
750	Plough	I, 389	II, 715
751	Pedal Base for Melodeons	II, 416	III, 815
752	Railroad Car Wheels	II, 145	III, 433
753	Machine Banding	II, 225	.....
754	Finger-Bars for Harvesters	I, 335	II, 649
755	[Suspended]	.....	.....
756	Cane-Planter	I, 363	II, 682–3
757	Bee-Hive	I, 296	II, 579
758	Machine for Rolling Dough	II, 383	III, 770
759	Egg-Beater	II, 384	III, 768
760	Lifting-Jack	II, 213	III, 517
761	Grain-Separator	II, 231	III, 253–4
762	Seed-Planter	I, 382	II, 710–11
763	Rock-Drill	II, 96	III, 376
764	Lime-Kiln	II, 338	III, 700–1
765	Seeding-Machine	I, 409	II, 760
766	Cotton and Hay Presses	II, 221	III, 530
767	Railroad Car Wheels	II, 145	III, 433
768	Corn-Planter	I, 368	II, 689
769	Corn-Harvester	I, 332	II, 640
770	Machine for Making Brooms	II, 369	III, 752
771	Riding Saddle	II, 357	III, 722
772	Seed-Planter	I, 381	II, 700
773	Work-Box	II, 404	III, 784–5
774	Machine for Spreading Lime and other Fertilizers	I, 357	II, 659
775	Machine for Threading Bolts	I, 428	III, 8–9
776	Plough	I, 389	II, 716–7
777	Clothes-Wringer	II, 378	III, 761
778	Sausage-Machine	II, 391	III, 775
779	Clasps for Metallic Hoops	II, 211	III, 516
780	Photographic Plate-Holder	II, 426	III, 819
781	Propelling Cars and Carriages by Horse-Power	II, 156	III, 448
782	Machine for Moulding Shells	I, 473	III, 65
783	Plough	I, 390	II, 719
784	Gas-Lighting Lanterns	I, 643	III, 232
785	Cultivator	I, 309	II, 597
786	Driving Box for Locomotives	II, 22	III, 283
787	Cleaning the Top Cards of Carding Machines	I, 510	III, 112–3
788	Mowing-Machine	I, 360	II, 676
789	Treatment of Ores of Gold and Silver	I, 484	.....
790	Device for Fastening Harness Traces	II, 352	III, 725
791	Cleaning Gas Retorts	I, 600	III, 203
792	Knitting Machine	I, 533	III, 143
793	Sewing Machine	I, 570	III, 182
794	Paint Vehicle	I, 607	.....
795	Card Printing Machine	II, 438	III, 832
796	Machine for Shearing Cloth	I, 512	III, 116
797	Churn	II, 527	II, 586
798	Corn-Planter	I, 368	II, 690
799	Billiard-Table Cushions	II, 510	III, 896
800	Cutting Apparatus of Mowing-Machines	I, 361	II, 680
801	Treating Flax, Hemp, &c	I, 523	III, 131
802	Seed-Planter	I, 382	II, 707
18,803	Plough	I, 391	II, 719–22

No.	Invention or Discovery.	Text.	Plates.
18,804	Agricultural Fork	I, 315	II, 607
805	Billiard-Table Cushions	II, 510	III, 895
806	Planing-Machine	II, 276	III, 608
807	Sewing-Thimble	I, 574	III, 182
808	Machine for Boring Hubs	II, 263	III, 588
809	Life-Preserver	II, 49	III, 316
810	Piano-forte	II, 431	III, 890
811	Machine for Cutting Metallic Bars	I, 471	III, 63
812	Printing-Press	II, 440	III, 827-8
813	Harvester	I, 329	II, 638
814	Propeller	II, 51	III, 323
815	Bee-Hive	I, 296	II, 579
816	Securing Hatches of Vessels	II, 64	III, 331
817	Sewing-Machine	I, 570	III, 181
818	Lamp	I, 636	III, 231
819	Life and Treasure Buoy for Vessels	II, 62	III, 331
820	Plough	I, 390	II, 718
821	Seed-Planter	I, 382	II, 706
822	Steam Boiler	II, 4	III, 264
823	Sewing-Machine	I, 571	III, 183
824	Cushion for Wings of Bomb-Lance	II, 463	III, 861
825	Plough	I, 391	II, 728
826	Pocket-Book Alarm	II, 508	III, 894
827	Potato Planter	I, 372	II, 696
828	Shingle	II, 306	III, 651
829	Reaping and Mowing Machine	I, 402	II, 744
830	Construction of Salt Pans	I, 613	III, 286
831	Machine for Sticking Pins on Paper	I, 485	III, 84
832	Ice-Breaking Boat	II, 43	III, 309-10
833	Reaping and Mowing Machine	I, 403	II, 742
834	Sewing-Machine	I, 570	III, 174
835	Steering Apparatus for Vessels	II, 65	III, 334
836	Revolving Fire-Arm	II, 470	III, 867
837	Cut-Off Valve-Gear of Steam Engines	II, 38	III, 296
838	Adjustable Gauge for Dovetails	II, 259	III, 583
839	Casters for Furniture	II, 373	III, 754
840	Cultivator	I, 310	II, 600
841	Billiard-Table Cushions	II, 511	III, 898
842	Machinery for Lifting Water	II, 195	III, 497
843	Tube for Seed-Planters	I, 383	II, 707
844	Corn and Cob Mill	II, 235	III, 548-9
845	Mechanical Movement for Sewing-Machines	I, 552	III, 161
846	Corn-Planter	I, 369	II, 705
847	Spring-Valve Cock	II, 30	III, 289
848	Dress of Mill-Stones	II, 240	III, 550
849	Egg-Beater	II, 384	III, 766
850	Horse-Rake	I, 400	II, 738
851	Vault-Light Covers	II, 128	III, 414
852	Seeding-Machine	I, 410	II, 753
853	Seeding-Machine	I, 409	II, 749-55
854	Cotton and Hay Presses	II, 221	III, 532-3
855	Hubs of Carriage Wheels	II, 152	III, 443
856	Seeding-Machine	I, 409	II, 749-50
857	Flexomanus	II, 411	III, 804
858	Portable Field-Fence	II, 102	III, 385
859	Cooking-Stove	I, 653	III, 242
860	Portable Saw Mill	II, 282	III, 615
861	Surface Condensers	II, 8	III, 259-60
862	Cheese Press	II, 220	III, 528
863	Lubricating Oil Cups	II, 214	III, 521
18,864	Steam Cotton-Press	II, 219	III, 525

No.	Invention or Discovery.	Text.	Plates.
18,865	Bracing Springs for Vehicles	II, 165	III, 460
866	Fuses of Shells and other Projectiles	II, 488	III, 879
867	Windowing-Machine	I, 422	II, 770
868	Feet Warmer	I, 656	III, 249
869	Life-Preserver	II, 49	III, 316
870	Pump	II, 188	III, 490
871	Supporting Reels for Harvesters	I, 336	II, 639
872	Boring-Machine	II, 256	III, 577–78
873	Infantine Exercising Chair	II, 374	III, 758
874	Bagasse Furnace	I, 627	III, 222–23
875	Steam Boiler	II, 5	III, 256
876	Bayonet Fastening	II, 462	III, 861
877	Drawing-Knife	II, 260	III, 583
878	Curtain Fixtures	II, 380	III, 762
879	Machine for Pegging Boots and Shoes	II, 347	III, 732
880	Sewing-Machine	I, 571	III, 179–80
881	Seeding-Machine	I, 410	II, 756
882	Snow-Plough	II, 165	III, 458
883	Furnace for Coal-Burning Locomotives	III, 923	III, 228
884	Journal-Box for Railroad Cars	II, 157	III, 449
885	Grate Damper	I, 623	III, 217
886	Ventilating Mattresses	II, 389	III, 777
887	Straw Cutter	I, 420	II, 771
888	Preparing Fibrous Substances for Spinning	I, 522	III, 123–4–5
889	Washing-Machine	II, 399	III, 792
890	Clock	II, 69	III, 342
891	Extension Table	II, 393	III, 778
892	Nut-Machine	I, 478	III, 75
893	Turning the Band Portions of Carriage Hubs	II, 148	III, 438
894	Shovel Plough	I, 395	II, 720
895	Wine and Cider Press	II, 219	III, 526–7
896	Casting Hinges	I, 448	III, 31–35
897	Air-Tubes in Fire-Boxes of Steam Boilers	II, 5	III, 257
898	Washing-Machine	II, 399	III, 786
899	Potato-Digger	I, 398	II, 740
900	Cultivator	I, 310	II, 602
901	Treating Photographic and other Pictures	II, 428	.....
902	Bedstead Slats	II, 366	III, 750
903	Railroad Snow-Plough	II, 165	III, 459
904	Sewing-Machine	I, 572	III, 181
905	Machine for Cutting and Grinding Corn-Stalks	I, 305	II, 593
906	Machine for Rolling Cornice	I, 487	III, 88
907	Hand Printing-Press	II, 443	III, 834–35
908	Dynamometer	II, 71	III, 344
909	Screw-Cutting Machine	I, 491	III, 92
910	Refining Iron	I, 455	III, 44
911	Glass Knobs for Doors	I, 439	III, 19
912	Hydraulic Valve	II, 182	III, 477
913	Cotton-Seed Planter	I, 370	II, 693
914	Furnace for Tempering Scythes	I, 493	III, 95
915	Sewing-Machine	I, 572	III, 164
916	Pump	II, 189	III, 489
917	Machine for Carving Wood	II, 324	III, 691
918	Implement for Cutting Metal Tubes	I, 471	III, 59
919	Feed-Water Attachments for Steam Engines	II, 11	III, 266–67
920	Artificial Fuel	I, 624	.....
921	Saw-Set	II, 284	III, 616
922	Corn-Husker	I, 352	II, 662
923	Grinding Mill	II, 237	III, 555
924	Casting Car-Wheels	I, 429	III, 11
18,925	Giving Motion to Valves of Steam Engines	II, 36	III, 298–99

No.	Invention or Discovery.	Text.	Plates.
18,926	Casting Gas Retorts	I, 600	III, 202
927	Governor for Machinery	II, 228	III, 538
928	Cultivator	I, 310	II, 603
929	Vegetable Cutter	II, 395	III, 779
930	Clothes Rack	II, 378	III, 760
931	Apparatus for Illustrating Conic Sections, &c	II, 72	III, 348
932	Approach-Opening Farm Gate	II, 106	III, 394–95
933	Oscillating Engine and Pumps	II, 9	III, 262–63
934	Portable Field Fence	II, 102	III, 986
935	Turning the Leaves of Books	II, 405	III, 796–97
936	Churn	I, 299	II, 590
937	Churn	I, 299	II, 587–88
938	Harvester	I, 329	II, 636
939	Cultivator	I, 310	II, 596
940	Machine for Bending Horse-Shoes	I, 451	III, 37
941	Mode of Belting	II, 227	III, 536
942	Governing the Cut of Circular Sawing Machinery	II, 292	III, 632
943	Cross-cut Sawing Machine	II, 290	III, 628
944	Cutting Zigzag Grooves in the Stiles of Washboards	II, 323	III, 668
945	Lighting Gas by Electricity	I, 634	III, 233
946	Straw Cutter	I, 420	II, 773
947	Hand Stamp	II, 455	III, 854
948	Gearing for Feed-Rollers in Re-sawing Machines	II, 295	III, 638–39
949	Oil Can	II, 210	III, 515
950	Springs for Railroad Cars	II, 159	III, 450
951	Furnace	I, 626	III, 219
952	Connecting the Panels of Portable Field Fences	II, 104	III, 389
953	Deflecting Plates and Spark Receivers in Locomotives	II, 22	III, 292
954	Potato Digger	I, 398	II, 733
955	Lifting Jack	II, 213	III, 518
956	Washing-Machine	II, 399	III, 793
957	Clamp for Setting Saws	II, 302	III, 652
958	Instrument for Draughting Coats	II, 501	III, 889
959	Seeding-Machine	I, 411	II, 754
960	Machine for Sawing Hand Rails	II, 286	III, 623
961	Railroad Car or Carriage Spring	II, 142	III, 430
962	Burglar-Proof Safes	I, 488	III, 86
963	Attaching Lightning Rods	II, 73	III, 344
964	Dry Sand Cores	I, 433	----------
965	Washboard	II, 396	III, 779
966	Locomotive Engine Wheel	II, 20	III, 288
967	Machine for Sawing Shingles	II, 299	III, 648–9
968	Spring-Bottom Bedsteads	II, 368	III, 752
969	Mooring Vessels	II, 63	III, 330
970	Tool for Turning Journals	I, 500	III, 106
971	Blacksmiths' Tongs	I, 500	III, 96
972	Water-Closet	II, 89	III, 364
973	Balance for Detecting Counterfeit Money	II, 207	III, 513
974	Guide-Gauge for Sawing Timber	II, 319	III, 677
975	Mowing-Machine	I, 361	II, 675
976	Mowing-Machine	I, 361	II, 677
977	Throwing into and out of Gear the Tool of Mortising Machines	II, 269	III, 597–8
978	Seeding-Machine	I, 411	II, 752
979	Hoe	II, 528	II, 660
980	Preparing Plastic Cotton for Moulding Purposes	I, 589	----------
981	Harvester	I, 330	II, 648
982	Seed-Drill	I, 406	II, 752
983	Track-Clearers for Mowing-Machines	I, 362	II, 678
984	Journal-Box for Railroad-Cars	II, 162	III, 452
18,985	Grinding-Mill	II, 244	III, 564

No.	Invention or Discovery.	Text.	Plates.
18,986	Rotary-Pump	II, 192	III, 494
987	Door-Spring	I, 438	III, 19
988	Machine for Binding Grain	I, 319	II, 610
989	Rotary Steam-Engine	II, 14	III, 270
990	Railroad Car-Coupling	II, 140	III, 429
991	Machine for making Volute Springs	I, 496	III, 98
992	Joints for Carriage Tops	II, 151	III, 442
993	Cider-Mill	II, 242	III, 558
994	Portfolio	II, 433	III, 821
995	Cotton-Press	II, 220	III, 529
996	Harness-Saddles	II, 351	III, 726
997	Governor for Steam-Engines	II, 11	III, 268
998	Head-Rest	II, 163	III, 455
999	Seed-Planter	I, 383	II, 704
19,000	Producing Increased Adhesion of Locomotive to Rail	II, 21	III, 285
1	Harvester	I, 329	II, 622, 645
2	Harvester	I, 330	II, 652
3	Pump	II, 189	III, 490
4	Rotary Pump	II, 192	III, 495
5	Circular Sawing-Machine	II, 289	III, 626
6	Paint Compound	I, 607	.....
7	Covering the Heads of Nails	I, 475	III, 55
8	Steam Spring-Bedstead	II, 366	III, 748
19,009	Potato-Digger	I, 398	II, 734

ADDITIONAL IMPROVEMENTS.

No.	Invention or Discovery.	Text.	Plates.
158	Harvesting Machine, [16,244]	II, 555	III, 915
159	Looms, [13,724]	II, 555	III, 920
160	[Number altered to 165]	.....	.....
161	Fire-Arm, [15,521]	II, 556	III, 920
162	Filter, [15,646]	II, 556	III, 915
163	Safety Hatches for Warehouses, [15,201]	II, 556	III, 916
164	Farm Gate, [14,851]	II, 556	III, 917
165	Spring Bed-Bottoms, [13,188]	II, 556	III, 915
166	Cutter for Boring Wheel Hubs, [10,087]	II, 557	III, 917
167	Spoke and Axe-helve Machine, [13,731]	II, 557	III, 918
168	Sawing-Machine, [14,339]	II, 557	III, 919
169	Winnowing-Machine, [11,069]	II, 557	III, 916
170	Box Fitting Apparatus, [16,402]	II, 557	III, 919
171	Fire-Arm, [15,521]	II, 557	III, 915
172	Machine for Kneading Dough, [12,217]	II, 557	III, 920
173	Packing Pistons and Stuffing Boxes of Steam Engines, [17,422]	II, 558	III, 918
174	Gutta Percha Stereotype Compositions, [9,870]	II, 558	.....
175	Hoisting Winches for Ship-Board, [16,965]	II, 558	.....
176	Mechanism in Looms for Weaving Cloth, [16,405]	II, 558	III, 921
177	Consumption of Smoke in Locomotive Engines, [17,436]	II, 558	III, 918
178	Straw Cutting Machine, [13,807]	II, 558	III, 920
179	Inkstands, [17,147]	II, 559	III, 919
180	Portable Chair, [14,877]	II, 559	III, 921
181	Winnower, [8,884]	II, 559	III, 922
182	Skates, [14,586]	II, 559	III, 922
183	Bag or Sack Holder, [17,176]	II, 559	III, 922

FOR USE IN LIBRARY BUILDING ONLY
DO NOT REMOVE